

Digitized Automation for a Changing World

Delta ASDA-E3C-L Servo Drive User Manual

www.deltaww.com

Preface

Thank you for purchasing this product. This manual provides information about the ASDA-E3C-L series servo drives (E3C-L) and the ECM-E3 series servo motors.

This manual includes:

- Installation and inspection of servo drive and servo motor
- Servo structure and wiring diagram
- Instructions for test operation
- Instructions for servo tuning
- Description of motion control
- Description of parameters
- Description of communication protocol
- Troubleshooting

How to use this manual:

Use this manual as a reference when installing, setting up, using, and maintaining the servo drive. Before initiating the tuning or setup process, read Chapters 1 to 5.

Delta technical services:

Consult your Delta equipment distributor or Delta Customer Service Center if you encounter any problems.

Safety precautions

This product is a high-resolution open type servo drive. It should be installed in a shielded control cabinet during operation. This servo drive uses precise feedback control and a digital signal processor (DSP) with high-speed calculation capability to control the current output generated by IGBT to operate the three-phase permanent magnet synchronous motors (PMSM), achieving precise positioning.

This product is used in industrial applications and should be installed in a control cabinet. Servo drives, wires, and motors should all be installed in an environment that complies with UL 50 Type 1.

Pay special attention to the following safety precautions at all times during inspection, installation, wiring, operation, maintenance, and examination of the servo drive.

The symbols of “STOP”, “DANGER”, and “WARNING” indicate:

	**Absolutely prohibited activities. May cause serious damage or even malfunction of the product if the instructions are not followed.**
	**Danger. May cause severe or fatal injuries to personnel if the instructions are not followed.**
	**Warning. May cause moderate injury to personnel, or lead to severe damage or even malfunction of the product if the instructions are not followed.**

Inspection

	Follow the instructions when using the servo drive and servo motor, or it may cause a fire or malfunction.

Installation

	Do not expose the product to an environment containing water vapor, corrosive gas, flammable gas, or other foreign matter to reduce the risk of electric shock or fire.

Wiring

	■ Connect the ground terminals to a Class 3 ground system. Ground resistance should not exceed 100Ω. Improper grounding may result in an electric shock or fire. ■ Do not connect the three-phase power supply to the motor output terminals U, V, and W, or it may cause personal injury or a fire. ■ Tighten the screws of the power and motor output terminals, or it may cause a fire. ■ When wiring, refer to the description of wire selection in this manual to prevent any danger.

Main circuit wiring



Do not repeatedly turn the power on and off. If continuous power on and off is needed, wait at least one minute between intervals.



- Do not put the motor power cable and signal cable in the same channel or bond them together. Separate the motor power cable and signal cable by at least 30 centimeters (11.8 inches).
- Use stranded wires and multi-core shielded-pair wires for signal cables and encoder cables. The maximum length of the signal cable is 3 meters (9.84 feet) and the maximum length of the encoder cable is 20 meters (65.62 feet).
- High voltage may remain in the servo drive after the power is turned off. Do not touch the terminals or perform wiring until the “CHARGE” indicator is off.
- When wiring, remove the pluggable terminal blocks from the servo drive.
- When inserting the wires, do not short-circuit the adjacent wires.
- Before applying power, inspect and ensure that the wiring is correct.

Operation



During motor operation, do not touch any rotating motor parts, or it may cause personal injury.



- To avoid accidents, remove all units during the first test run, so that the motor is operating without any load.
- If you fail to operate the servo motor properly after it is connected to the machine, it may damage the machine and lead to personal injury.
- In order to prevent danger, it is strongly recommended that you make sure the servo motor can operate normally without load first. Then, try operating the motor with load.
- Do not touch the heat sink of the servo drive during operation, or it may cause burns.



- Before operating the machine, change the servo parameter setting according to the application. If the parameters are not adjusted to the correct values, it may lead to malfunction of the machine or the operation might be out of control.
- Before operating the machine, ensure you can activate the emergency stop.
- When applying power, make sure the motor shaft is not rotating because of inertia of the machine or other causes.

Maintenance and examination



- Do not touch the internal parts of the servo drive and servo motor, or it may cause an electric shock.
- Do not disassemble the servo drive panel when the power is on, or it may cause an electric shock.
- Do not touch the wiring terminals until the “CHARGE” indicator is off, since the residual voltage may cause an electric shock.
- Do not disassemble the servo motor, or it may cause an electric shock or personal injury.
- Do not change the wiring when the power is on, or it may cause an electric shock or personal injury.
- Only qualified electricians can install, wire, repair, and maintain the servo drive and servo motor.

Leakage current



- The leakage current of the servo drive is greater than 3.5 mA.
- According to the IEC 61800-5-1 standard, the wires must comply with one of the following specifications to ensure proper grounding:
  1. Copper wire with a cross-sectional area of at least 10 mm^2.
  2. Aluminum wire with a cross-sectional area of at least 16 mm^2.
- Failure to comply with the specifications may result in personal injury.
- Before applying power, inspect and ensure that the wiring is correct.

Inspection and maintenance

Operating conditions:

- Average annual ambient temperature: 30°C (86°F)
- Average load rate: 80% or less
- Average operating time: 20 hours per day

Inspection frequency	Inspection item
Daily inspection	Check if the ambient temperature and humidity are normal.
	Check if the input voltage is normal.
	Check if there is abnormal vibration and noise.
	Check if there is any abnormal smell.
	Check if the servo drive has any visible damage.
	Check if the ventilation slots are kept clear of dust and other foreign objects. Note 1
	Check if the wirings are damaged or disconnected.
	Check if any cable is loose or damaged.
Annual inspection	Check if any screw is loose or damaged.
	Check if the servo drive, motor, and control cabinet are properly grounded.
	Check if the color and temperature of the power input, power output, and regenerative terminals are normal. Note 2

Note:

1. Install dust filters on the control cabinet openings (where there are fans or ventilation slots), and clean the filters regularly. Install door seals on cabinet doors and rubber grommets on cable openings for better seal.
2. Check if the servo drive is properly wired. If the color of any terminal turns black or is abnormal, it is suggested that you replace the terminal.

Part replacement

Operating conditions:

- Average annual ambient temperature: 30°C (86°F)
- Average load rate: 80% or less
- Average operating time: 20 hours per day

Product	Part name	Suggested replacement cycle	Note
Servo drive	Electrolytic capacitor	Approx. 5 years	The replacement cycle varies depending on the ambient conditions and usage. Replace the part immediately when any error occurs.
	Cooling fan	2 to 3 years (10,000 to 30,000 hours)	
	Relay	Approx. 100,000 times	
	Soft start resistor	Approx. 20,000 times	
Battery box	Battery	Refer to Section 10.1.	
Servo motor	Bearing	20,000 hours	
	Oil seal	5,000 hours	



- When the part reaches its suggested replacement cycle, consult the distributor or Delta for replacement suggestions.
- Do not attempt to disassemble or repair the product yourself.

Note: the content of this manual may be revised without prior notice. Refer to the latest information from Delta's website.

(This page is intentionally left blank.)

Table of Contents

Before Operation

1 Product Overview

1.1 Items to check after unpacking ····· 1-2
1.2 Model overview ····· 1-3
1.2.1 Nameplate information ····· 1-3
1.2.2 Model explanation ····· 1-5
1.3 Servo drive and motor combination table ····· 1-8
1.3.1 220V models ····· 1-8
1.3.2 400V models ····· 1-9
1.4 Description of the drive interface ····· 1-10
1.4.1 220V models ····· 1-10
1.4.2 400V models ····· 1-11

2 Installation

2.1 Ambient storage conditions ····· 2-2
2.2 Ambient installation conditions ····· 2-3
2.3 Mounting direction and space ····· 2-4
2.4 Safety precautions for using motors ····· 2-6
2.4.1 Troubleshooting for the motor operation and status ····· 2-8
2.4.2 Mounting directions and precautions for the servo motor ····· 2-9
2.4.3 Precautions for using servo motor with oil seal ····· 2-10
2.4.4 Precautions for installing servo motor accessories ····· 2-11
2.4.5 Oil and water prevention measures for the servo motor ····· 2-13
2.4.6 Measures to suppress temperature increase of the servo motor ····· 2-14
2.5 Specifications for the circuit breaker, magnetic contactor and fuse ····· 2-15
2.6 Installation requirements for EMC ····· 2-16
2.6.1 EMI filters ····· 2-17
2.7 Selecting the regenerative resistor ····· 2-19
2.8 The use of electromagnetic brake ····· 2-24
2.9 The use of cable ····· 2-26

3 Wiring

3.1 System connection ····· 3-3
3.1.1 220V models servo system connection ····· 3-3
3.1.1.1 Connecting to peripheral devices ····· 3-3
3.1.1.2 Connectors and terminals of the servo drive ····· 3-4
3.1.1.3 Wiring for power supply ····· 3-5
3.1.1.4 Wiring diagrams for the servo system ····· 3-6
3.1.2 400V models servo system connection ····· 3-7
3.1.2.1 Connecting to peripheral devices ····· 3-7
3.1.2.2 Connectors and terminals of the servo drive ····· 3-8
3.1.2.3 Wiring for power supply ····· 3-9
3.1.2.4 Wiring diagrams for the servo system ····· 3-10
3.1.3 Power connector specifications ····· 3-11
3.1.3.1 F40 - F80 motors – Power connectors ····· 3-11
3.1.3.2 F100 - F130 motors – Power connectors ····· 3-12
3.1.3.3 F180 motors – Power connectors ····· 3-13
3.1.3.4 F100 - F180 motors – Brake connectors ····· 3-13
3.1.4 Encoder connector specifications ····· 3-14
3.1.4.1 F40 - F80 motors – Encoder connectors ····· 3-14
Standard connector ····· 3-14
Bulkhead connector ····· 3-15
3.1.4.2 F100 - F180 motors – Encoder connectors ····· 3-16
3.1.5 Wire selection ····· 3-17
3.1.5.1 Wire and terminal specifications ····· 3-17
3.1.5.2 Crimping the wire ferrules ····· 3-18
3.1.5.3 Encoder cable specifications ····· 3-19
3.1.5.4 Power cable specifications ····· 3-20
3.1.5.5 Flexible cable specifications ····· 3-23
3.1.6 Waterproof connector wiring instructions ····· 3-24
3.1.6.1 F40 - F80 motors – Power / Encoder / Brake connectors ····· 3-24
3.1.6.2 F100 - F180 motors – Power connectors ····· 3-26
3.1.6.3 F100 - F180 motors – Encoder / Brake connectors ····· 3-27
3.1.6.4 Waterproof connector installation and wiring specifications ····· 3-28
3.2 Wiring for the CN1 I/O connector ····· 3-29
3.2.1 CN1 I/O connector pin assignment ····· 3-29
3.2.2 CN1 I/O connector signal description ····· 3-31
3.2.3 CN1 wiring diagrams ····· 3-36
3.3 Wiring for the CN2 encoder connector ····· 3-43
3.3.1 F40 - F80 motors – Encoder cables ····· 3-44
3.3.2 F100 - F180 motors – Encoder cables ····· 3-45

3.3.3 Installing shielded wires for CN2 connector ····· 3-46
3.4 Wiring for the CN3 connector ····· 3-47
3.5 Standard wiring example ····· 3-49
3.5.1 Position (PT) control mode – differential line driver input ····· 3-49
3.5.2 Position (PT) control mode – open collector input ····· 3-50
3.5.3 Position (PR) control mode – internal position commands ····· 3-51
3.5.4 Speed (S/Sz) control mode ····· 3-52
3.5.5 Torque (T/Tz) control mode ····· 3-53

4 Panel Operation and Testing

4.1 Panel description ····· 4-2
4.2 Parameter setting procedure ····· 4-3
4.3 Status display ····· 4-6
4.3.1 Data save status ····· 4-6
4.3.2 Decimal points ····· 4-6
4.3.3 Alarm messages ····· 4-6
4.3.4 Positive and negative value setting ····· 4-7
4.3.5 Monitoring display ····· 4-7
4.3.6 Display when power is off ····· 4-9
4.4 General functions ····· 4-10
4.4.1 Operation of fault record display ····· 4-10
4.4.2 Force DO on ····· 4-11
4.4.3 Digital input diagnosis ····· 4-12
4.4.4 Digital output diagnosis ····· 4-12
4.5 Testing ····· 4-13
4.5.1 Initial testing ····· 4-13
4.5.2 Applying power to the servo drive ····· 4-14
4.5.3 JOG trial run without load ····· 4-18
4.5.4 Trial run without load (Speed mode) ····· 4-19
4.5.5 Trial run without load (Position mode) ····· 4-21

Tuning

5 Tuning

5.1 Tuning procedure and modes ····· 5-2
5.1.1 Tuning flowchart ····· 5-2
5.1.2 Flowchart of initial inertia estimation when connecting to a machine ····· 5-3
5.1.3 Tuning flowchart of Auto mode ····· 5-4
5.1.4 Tuning flowchart of Semi-auto mode ····· 5-5
5.1.5 Limitations on load inertia estimation ····· 5-6
5.1.6 Dealing with the mechanical resonance ····· 5-7
5.2 Differences between gain adjustment modes ····· 5-9
5.3 Manual tuning of gain parameters ····· 5-10

Operation and Motion Control

6 Control Mode

6.1 Selecting the control mode ····· 6-3
6.2 Position mode ····· 6-4
6.2.1 Position command in PT mode ····· 6-4
6.2.2 Position command in PR mode ····· 6-5
6.2.3 Control structure of Position mode ····· 6-6
6.2.4 S-curve filter for Position commands ····· 6-7
6.2.5 Electronic gear ratio (E-Gear ratio) ····· 6-8
6.2.6 Low-pass filter ····· 6-9
6.2.7 Timing diagram of PR mode ····· 6-9
6.2.8 Gain adjustment of the position loop ····· 6-10
6.2.9 Low-frequency vibration suppression in Position mode ····· 6-12
6.3 Speed mode ····· 6-15
6.3.1 Selecting the Speed command source ····· 6-15
6.3.2 Control structure of Speed mode ····· 6-16
6.3.3 Smoothing the Speed command ····· 6-17
6.3.4 Scaling of the analog command ····· 6-19
6.3.5 Timing diagram of Speed mode ····· 6-20
6.3.6 Gain adjustment of the speed loop ····· 6-21
6.3.7 Resonance suppression unit ····· 6-23
6.4 Torque mode ····· 6-25
6.4.1 Selecting the Torque command source ····· 6-25

6.4.2 Control structure of Torque mode ····· 6-26
6.4.3 Smoothing the Torque command ····· 6-26
6.4.4 Scaling of the analog command ····· 6-27
6.4.5 Timing diagram of Torque mode ····· 6-27
6.5 Dual-mode and multi-mode operations ····· 6-28
6.5.1 Speed-Position dual mode ····· 6-29
6.5.2 Speed-Torque dual mode ····· 6-30
6.5.3 Torque-Position dual mode ····· 6-31
6.6 Others ····· 6-32
6.6.1 Applying the speed limit ····· 6-32
6.6.2 Applying the torque limit ····· 6-32
6.6.3 Analog monitoring ····· 6-33

7 Motion Control

7.1 PR mode description ····· 7-2
7.1.1 Shared parameters for PR paths ····· 7-4
7.1.2 Monitoring variables for PR mode ····· 7-6
7.1.3 Motion Control commands ····· 7-9
7.1.3.1 Homing methods ····· 7-9
7.1.3.2 Speed command ····· 7-22
7.1.3.3 Position command ····· 7-24
7.1.3.4 Jump command ····· 7-27
7.1.3.5 Write command ····· 7-29
7.1.3.6 Rotary Axis Position (Index Position) command ····· 7-31
7.1.4 Overview of the PR path ····· 7-35
7.1.5 Trigger methods for the PR path ····· 7-41
7.1.6 PR path execution flow ····· 7-45
7.1.7 Data array ····· 7-57

Parameter Setting

8 Parameters

8.1 Parameter definitions ····· 8-2
8.2 Parameter descriptions ····· 8-3
P0.xxx Monitoring parameters ····· 8-3
P1.xxx Basic parameters ····· 8-18
P2.xxx Extension parameters ····· 8-46
P3.xxx Communication parameters ····· 8-73
P4.xxx Diagnosis parameters ····· 8-76
P5.xxx Motion control parameters ····· 8-83
P6.xxx PR parameters ····· 8-104
P7.xxx PR parameters ····· 8-127
Table 8.1 Digital input (DI) descriptions ····· 8-133
Table 8.2 Digital output (DO) descriptions ····· 8-140
Table 8.3 Monitoring variables descriptions ····· 8-146

9 Modbus Communication

9.1 Modbus communication interface (hardware) ····· 9-2
9.2 RS-485 communication parameters ····· 9-4
9.3 Modbus communication protocol ····· 9-4
9.4 Writing and reading communication parameters ····· 9-14
9.5 RS-485 communication specification ····· 9-15

10 Absolute System

10.1 Battery specifications ····· 10-3
10.2 Installation ····· 10-5
10.2.1 Installing the battery box in the servo system ····· 10-5
10.2.2 Installing and replacing a battery ····· 10-6
10.3 System initialization and operating procedures ····· 10-7
10.3.1 System initialization ····· 10-7
10.3.2 Pulse number ····· 10-8
10.3.3 PUU number ····· 10-9
10.3.4 Establishing the absolute origin position ····· 10-10
10.3.4.1 Establishing the absolute origin position with DI/DO ····· 10-10
10.3.4.2 Establishing the absolute origin position with parameters ····· 10-10
10.3.4.3 Establishing the absolute origin position with the PR homing function ····· 10-10
10.3.5 Reading the absolute position ····· 10-11

10.3.5.1 Reading the absolute position with DI/DO ····· 10-11
10.3.5.2 Reading the absolute position through communication ····· 10-14

Troubleshooting

11 Troubleshooting

11.1 Alarm list ····· 11-2
General type ····· 11-2
Motion control type ····· 11-4
11.2 Causes and corrective actions ····· 11-5

Appendix

A Specifications

A.1 ASDA-E3C-L servo drive ····· A-3
A.1.1 Specifications of the ASDA-E3C-L servo drive ····· A-3
A.1.1.1 220V models ····· A-3
A.1.1.2 400V models ····· A-6
A.1.2 Dimensions of the servo drive ····· A-9
A.1.2.1 220V models ····· A-9
A.1.2.2 400V models ····· A-11
A.2 ECM-E3 series servo motor ····· A-12
A.2.1 Specifications of ECM-E3 motors ····· A-12
A.2.1.1 220V models ····· A-12
F80 and below motors (low & medium inertia) ····· A-12
F80 and below motors (high inertia) ····· A-14
F130 motors (medium & high inertia) ····· A-16
A.2.1.2 400V models ····· A-18
F80 and below motors (medium inertia) ····· A-18
F100 motors (medium inertia) ····· A-20
F130 motors (medium & high inertia) ····· A-22
F180 motors (medium inertia) ····· A-24
A.2.2 Torque features (T-N curves) of the ECM-E3 motors ····· A-26
A.2.2.1 220V models ····· A-26
F80 and below motors ····· A-26
F130 motors ····· A-27

A.2.2.2 400V models ····· A-28
F80 and below motors ····· A-28
F100 motors ····· A-28
F130 motors ····· A-29
F180 motors ····· A-29
A.2.3 Power derating curves of the ECM-E3 motors ····· A-30
A.2.4 Overload features ····· A-31
A.2.5 Dimensions of ECM-E3 series servo motor ····· A-33
A.2.5.1 220V models ····· A-33
F80 and below motors with cables (low & medium inertia) ····· A-33
F80 and below motors with bulkhead receptacles (low & medium & high inertia) ····· A-34
F130 motors (medium & high inertia) ····· A-35
A.2.5.2 400V models ····· A-36
F80 and below motors with cables (medium inertia) ····· A-36
F100 models (medium inertia) ····· A-37
F130 motors (medium & high inertia) ····· A-38
F180 motors (medium inertia) ····· A-39

B Accessories

B.1 Power connectors ····· B-2
B.2 Power cables ····· B-3
B.2.1 F40 - F80 motors ····· B-3
B.2.2 F100 - F130 motors ····· B-4
B.2.3 F180 motors ····· B-4
B.2.4 Brake cables for F100 - F180 motors ····· B-4
B.3 Power adapter cables and counterpart connector (for motors with bulkhead receptacles) ····· B-5
B.3.1 F40 - F80 motors ····· B-6
B.4 Encoder connectors ····· B-7
B.5 Encoder cables ····· B-8
B.5.1 F40 - F80 motors ····· B-8
B.5.2 F100 - F180 motors ····· B-9
B.6 Encoder adapter cables and counterpart connector (for motors with bulkhead receptacles) ····· B-10
B.6.1 F40 - F80 motors ····· B-11
B.7 Battery boxes ····· B-12
B.8 CN1 I/O connector ····· B-13
B.9 CN2 connector ····· B-13

B.10 CN3 Modbus communication cable ····· B-13
B.11 E3C–B2 adapter cable ····· B-13
B.12 Selecting brake and encoder connectors (or cables) for F100 - F180 motors ····· B-14

(This page is intentionally left blank.)

1 Product Overview

Before using the servo drive, pay attention to the items to check after unpacking and the description of the nameplate and model number. You can find a suitable servo motor for your servo drive in the table in Section 1.3.

1.1 Items to check after unpacking ····· 1-2
1.2 Model overview ····· 1-3
1.2.1 Nameplate information ····· 1-3
1.2.2 Model explanation ····· 1-5
1.3 Servo drive and motor combination table ····· 1-8
1.3.1 220V models ····· 1-8
1.3.2 400V models ····· 1-9
1.4 Description of the drive interface ····· 1-10
1.4.1 220V models ····· 1-10
1.4.2 400V models ····· 1-11

1.1 Items to check after unpacking

A complete servo drive set includes:

(1) A servo drive.

(2) A pluggable terminal block:

Model	Connects to
220V	L1, L2 (power input), P, D, C (using the regenerative resistor; a terminal jumper is included), and U, V, W (connecting the motor power cable). Note: the design of this terminal block is different for 400 W / 750 W and 1 kW / 1.5 kW models; do not mix them up while using.
400V	R, S, T (power input), P, D, C (using the regenerative resistor; a terminal jumper is included), and U, V, W, PE (connecting the motor power cable).

(3) A CN1 connector.

(4) Two plastic levers.

(5) A precaution sheet.

1.2 Model overview

1.2.1 Nameplate information

ASDA-E3C-L series servo drive

■ **Nameplate information**

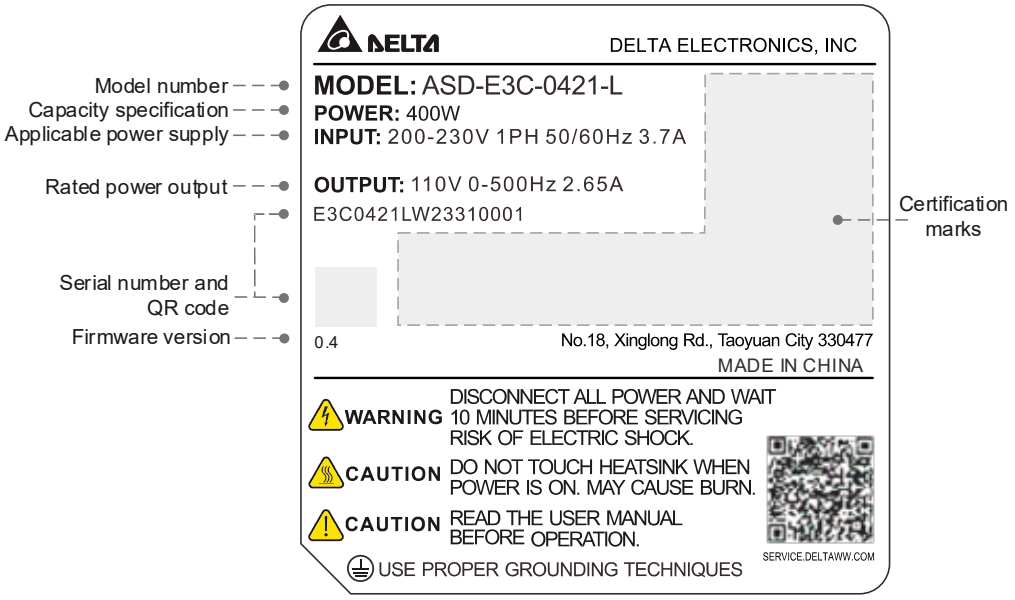

■ **Serial number**

E3C0421L	W	23	31	0001
(1)	(2)	(3)	(4)	(5)

(1) Model number
(2) Manufacturing plant (T: Taoyuan; W: Wujiang)
(3) Year of production (23: year 2023)
(4) Week of production (from 1 to 52)
(5) Production sequence in a week (starting from 0001)

1

ECM-E3 series servo motor

■ Nameplate information

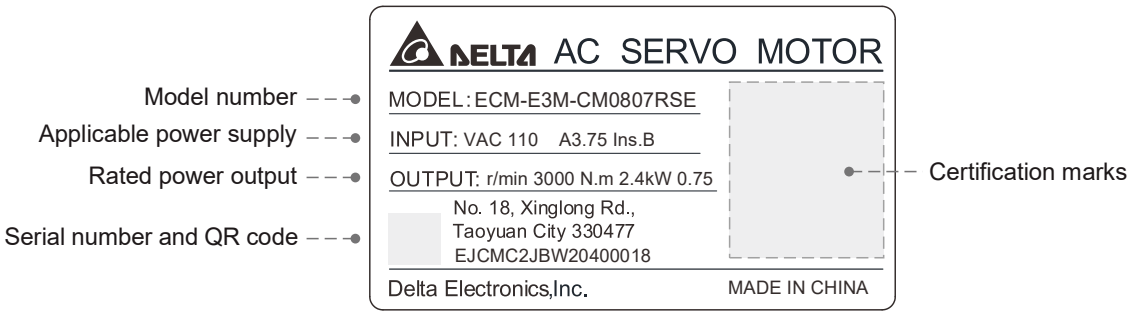

■ Serial number

EJCMC2JB	W	20	40	0018
(1)	(2)	(3)	(4)	(5)

(1) Model number
(2) Manufacturing plant (T: Taoyuan; W or Q: Wujiang)
(3) Year of production (20: year 2020)
(4) Week of production (from 1 to 52)
(5) Production sequence in a week (starting from 0001)

Note: the servo motor uses the certified voltage as the rated input voltage for operation, so the applicable power supply is 110V.

1.2.2 Model explanation

ASDA-E3C-L series servo drive

ASD – E3C – 04 21 – L
(1) (2) (3) (4) (5)

(1) Product name
ASD: AC servo drive

(2) Series
E3C: E3C series

(3) Rated power output

Code	Specification	Code	Specification
04	400 W	15	1.5 kW
07	750 W	20	2 kW
10	1 kW	30	3 kW

(4) Input voltage and phase
21: 220V, single-phase
43: 400V, three-phase

(5) Model type
L: pulse train model
L1: pulse train model with built-in regenerative resistor (only applicable to the 220V 400 W models)

Note: the model codes listed here are only for demonstration of the naming convention; some combinations of the model codes are not available. Contact the distributors for the models available for purchase.

1

ECM-E3 series servo motor

ECM - E 3 M - C M 08 07 R S E
(1) (2) (3) (4) (5) (6) (7) (8) (9) (10) (11)

(1) Product name
ECM: electronically commutated motor

(2) Servo type
E: basic type servo motor

(3) Series
3: 3rd series

(4) Inertia
L: low inertia
M: medium inertia
H: high inertia

(5) Rated voltage and speed
C: 220V and 3,000 rpm
E: 220V and 2,000 rpm
F: 220V and 1,500 rpm
J: 400V and 3,000 rpm
K: 400V and 2,000 rpm
L: 400V and 1,500 rpm

(6) Encoder type
A: 23-bit absolute optical encoder
(resolution of single turn: 23-bit; number of revolutions: 16-bit)
2: 23-bit incremental optical encoder (single-turn absolute)
P: 17-bit absolute magnetic encoder
(resolution of single turn: 17-bit; number of revolutions: 16-bit)
M: 17-bit incremental magnetic encoder (single-turn absolute)

(7) Motor frame size

Code	Specification	Code	Specification
04	40 mm	10	100 mm
06	60 mm	13	130 mm
08	80 mm	18	180 mm

(8) Rated power output

Code	Specification	Code	Specification
01	100 W	15	1.5 kW
02	200 W	18	1.8 kW
04	400 W	20	2 kW
07	750 W	30	3 kW
10	1 kW	-	-

(9) Shaft type and oil seal

	No brake With oil seal	With brake With oil seal
With keyway With screw hole	R	S

(10) Shaft diameter and connector type

S: standard shaft diameter and standard connectors

B: standard shaft diameter and bulkhead connectors

(11) Special code

E: standard products

Note: the model codes listed here are only for demonstration of the naming convention; some combinations of the model codes are not available. Contact the distributors for the models available for purchase.

1

1.3 Servo drive and motor combination table

1.3.1 220V models

Servo motor							Servo drive		
Model number	Rated / Max. speed (rpm)	Motor frame size (mm)	Rated power (W)	Inertia ($x10^{-4}$ kg·m^2) no brake / with brake	Rated / Max. current (Arms)	Rated / Max. torque (N·m)	Model number	Rated power (W)	Rated / Max. current (Arms)
ECM-E3L-C□0401□□E	3000 / 6000	40	100	0.0299 / 0.0315	0.857 / 3.44	0.32 / 1.12	ASD-E3C-0421-□	400	2.65 / 10.6
ECM-E3M-C□0602□□E	3000 / 6000	60	200	0.141 / 0.151	1.42 / 6.62	0.64 / 2.24	ASD-E3C-0421-□	400	2.65 / 10.6
ECM-E3M-C□0604□□E	3000 / 6000	60	400	0.254 / 0.264	2.40 / 9.47	1.27 / 4.45	ASD-E3C-0421-□	400	2.65 / 10.6
ECM-E3M-C□0807□□E	3000 / 6000	80	750	1.07 / 1.13	4.27 / 15.8	2.4 / 7.61	ASD-E3C-0721-□	750	5.1 / 14.14
						2.4 / 8.4	ASD-E3C-1021-□	1k	7.3 / 21.21
ECM-E3M-E□1310□□E	2000 / 3000	130	1k	7.79 / 7.94	5.96 / 19.9	4.77 / 14.3	ASD-E3C-1021-□	1k	7.3 / 21.21
ECM-E3M-E□1315□□E	2000 / 3000	130	1.5k	11.22 / 11.37	8.17 / 26.82	7.16 / 21.48	ASD-E3C-1521-□	1.5k	8.3 / 27
ECM-E3H-C□0602□□E	3000 / 6700	60	200	0.265 / 0.280	1.51 / 6.12	0.64 / 2.43	ASD-E3C-0421-□	400	2.65 / 10.6
ECM-E3H-C□0604□□E	3000 / 6700	60	400	0.523 / 0.538	2.21 / 8.46	1.27 / 4.83	ASD-E3C-0421-□	400	2.65 / 10.6
ECM-E3H-C□0807□□E	3000 / 6700	80	750	1.55 / 1.62	4.19 / 16.3	2.4 / 7.86	ASD-E3C-0721-□	750	5.1 / 14.14
						2.4 / 9.12	ASD-E3C-1021-□	1k	7.3 / 21.21
ECM-E3H-F□1308□□E	1500 / 4000	130	850	12.44 / 12.62	6.65 / 20.0	5.39 / 16.17	ASD-E3C-1021-□	1k	7.3 / 21.21
ECM-E3H-F□1313□□E	1500 / 4000	130	1.3k	18.00 / 18.14	7.70 / 23.9	8.34 / 25.02	ASD-E3C-1521-□	1.5k	8.3 / 27

1.3.2 400V models

Servo motor							Servo drive		
Model number	Rated / Max. speed (rpm)	Motor frame size (mm)	Rated power (W)	Inertia ($x10^{-4}$ kg·m^2) no brake / with brake	Rated / Max. current (Arms)	Rated / Max. torque (N·m)	Model number	Rated power (W)	Rated / Max. current (Arms)
ECM-E3M-J□0807□□E	3000 / 6000	80	750	1.07 / 1.13	2.15 / 7.90	2.4 / 7.61	ASD-E3C-1043-□	1k	3.37 / 7.07
						2.4 / 8.4	ASD-E3C-1543-□	1.5k	4.09 / 10.6
ECM-E3M-J□1010□□E	3000 / 6000	100	1k	2.78 / 3.06	3.03 / 9.21	3.18 / 7.4	ASD-E3C-1043-□	1k	3.37 / 7.07
						3.18 / 9.54	ASD-E3C-1543-□	1.5k	4.09 / 10.6
ECM-E3M-J□1015□□E	3000 / 6000	100	1.5k	3.69 / 3.97	3.73 / 11.4	4.77 / 13.08	ASD-E3C-1543-□	1.5k	4.09 / 10.6
						4.77 / 14.31	ASD-E3C-2043-□	2k	5.96 / 18.98
ECM-E3M-J□1020□□E	3000 / 6000	100	2k	4.68 / 4.95	5.00 / 15.3	6.37 / 19.11	ASD-E3C-2043-□	2k	5.96 / 18.98
ECM-E3M-K□1310□□E	2000 / 3000	130	1k	7.79 / 7.94	3.00 / 9.95	4.77 / 11.08	ASD-E3C-1043-□	1k	3.37 / 7.07
						4.77 / 14.3	ASD-E3C-1543-□	1.5k	4.09 / 10.6
ECM-E3M-K□1315□□E	2000 / 3000	130	1.5k	11.22 / 11.37	4.09 / 13.37	7.16 / 17.78	ASD-E3C-1543-□	1.5k	4.09 / 10.6
						7.16 / 21.48	ASD-E3C-2043-□	2k	5.96 / 18.98
ECM-E3M-K□1320□□E	2000 / 3000	130	2k	14.65 / 14.80	5.30 / 17.1	9.55 / 28.65	ASD-E3C-2043-□	2k	5.96 / 18.98
ECM-E3H-L□1308□□E	1500 / 4000	130	850	12.44 / 12.62	3.35 / 10.0	5.39 / 11.55	ASD-E3C-1043-□	1k	3.37 / 7.07
						5.39 / 16.17	ASD-E3C-1543-□	1.5k	4.09 / 10.6
ECM-E3H-L□1313□□E	1500 / 4000	130	1.3k	18.00 / 18.14	3.85 / 12.0	8.34 / 22.14	ASD-E3C-1543-□	1.5k	4.09 / 10.6
						8.34 / 25.02	ASD-E3C-2043-□	2k	5.96 / 18.98
ECM-E3H-L□1318□□E	1500 / 4000	130	1.8k	22.60 / 22.80	5.75 / 18.1	11.5 / 34.5	ASD-E3C-2043-□	2k	5.96 / 18.98
ECM-E3M-K□1820□□E	2000 / 3000	180	2k	29.11 / 30.38	5.7 / 18.1	9.55 / 28.65	ASD-E3C-2043-□	2k	5.96 / 18.98
ECM-E3M-L□1830□□E	1500 / 3000	180	3k	53.63 / 54.9	9.1 / 29.45	19.1 / 53.9	ASD-E3C-3043-□	3k	9.11 / 27.33
						19.1 / 57.29	-	-	-

1

1.4 Description of the drive interface

1.4.1 220V models

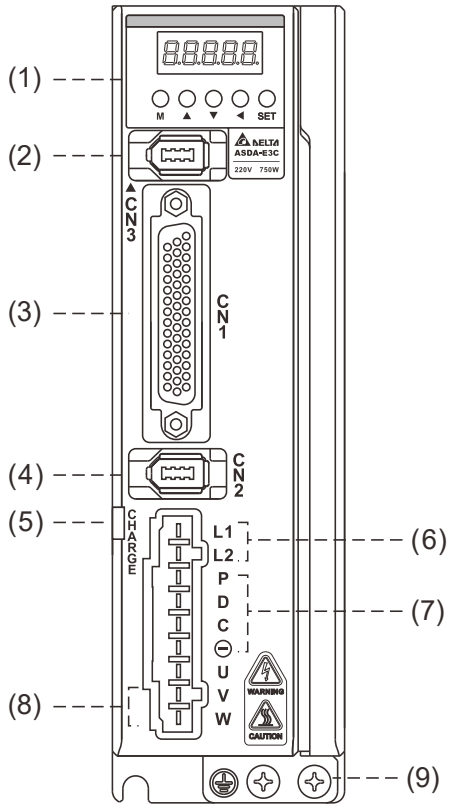

No.	Name	Description
(1)	-	7-segment display.
(2)	CN3	Modbus communication port: for communication via RS-485 or RS-232 (PC connection via RS-232 only).
(3)	CN1	I/O signal interface: connects to PLC or controls I/O.
(4)	CN2	Encoder connector: connects to the encoder.
(5)	CHARGE	Power indicator.
(6)	L1, L2	Power input terminals: connect to commercial power supply (200 - 230 V_{AC}, 50/60 Hz).
(7)	Regenerative resistor	For using the built-in regenerative resistor, or connecting to an external regenerative resistor or an external power regenerative unit.
(8)	U, V, W	Servo drive current output terminals: connect to the motor power cable (U, V, W). Do not directly connect power to UVW. Incorrect wiring will cause damage to the servo drive.
(9)	Grounding screws	Connect to the ground wires of the power supply and servo motor.

1.4.2 400V models

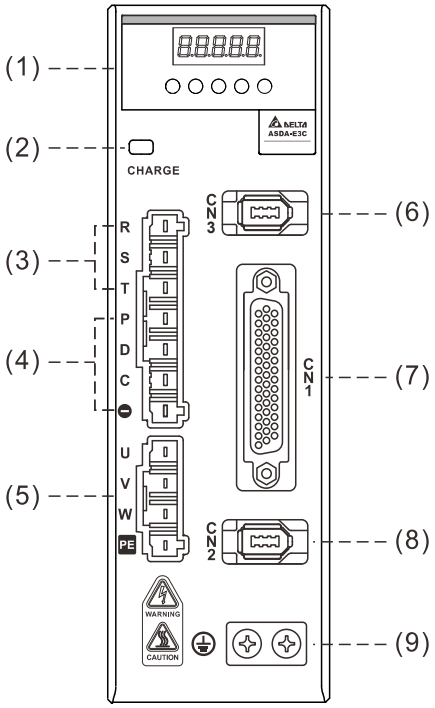

No.	Name	Description
(1)	-	7-segment display.
(2)	CHARGE	Power indicator.
(3)	R, S, T	Power input terminals: connect to commercial power supply (380 - 440 V_{AC}, 50/60 Hz).
(4)	Regenerative resistor	For using the built-in regenerative resistor, or connecting to an external regenerative resistor or an external power regenerative unit.
(5)	U, V, W, PE	Servo drive current output terminals: connect to the motor power cable (U, V, W). Do not directly connect power to UVW. Incorrect wiring will cause damage to the servo drive. PE can be connected to the ground wire of the servo motor.
(6)	CN3	Modbus communication port: for communication via RS-485 or RS-232 (PC connection via RS-232 only).
(7)	CN1	I/O signal interface: connects to PLC or controls I/O.
(8)	CN2	Encoder connector: connects to the encoder.
(9)	Grounding screws	Connect to the ground wires of the power supply and servo motor.

(This page is intentionally left blank.)

Installation 2

Follow the instructions in this chapter during installation. This chapter includes information about the circuit breaker, magnetic contactor, fuse, and the selection for EMI filter and regenerative resistor.

2.1 Ambient storage conditions ····· 2-2
2.2 Ambient installation conditions ····· 2-3
2.3 Mounting direction and space ····· 2-4
2.4 Safety precautions for using motors ····· 2-6
2.4.1 Troubleshooting for the motor operation and status ····· 2-8
2.4.2 Mounting directions and precautions for the servo motor ····· 2-9
2.4.3 Precautions for using servo motor with oil seal ····· 2-10
2.4.4 Precautions for installing servo motor accessories ····· 2-11
2.4.5 Oil and water prevention measures for the servo motor ····· 2-13
2.4.6 Measures to suppress temperature increase of the servo motor ····· 2-14
2.5 Specifications for the circuit breaker, magnetic contactor and fuse ····· 2-15
2.6 Installation requirements for EMC ····· 2-16
2.6.1 EMI filters ····· 2-17
2.7 Selecting the regenerative resistor ····· 2-19
2.8 The use of electromagnetic brake ····· 2-24
2.9 The use of cable ····· 2-26

2.1 Ambient storage conditions

2

Before installation, this product must be kept in the shipping carton. To retain warranty coverage and for future maintenance, follow these instructions for storage. While the product is temporarily not in use:

- Store the product in a temperature range of -20°C (-4°F) to +65°C (+149°F).
- Store the product in a relative humidity range of 0% to 90% (non-condensing).
- Avoid storing the product in an environment containing corrosive gas.

2.2 Ambient installation conditions

WARNING

E3C servo drive: the environment should be free of water, water vapor, dust, oily dust, corrosive and inflammable gas or liquids, airborne dust or metal particles, or devices that generate excessive heat. And the environment should be solid without vibration or interference of electromagnetic noise.

Motor: the ambient temperature for the ECM-E3 motors should be between -20°C (-4°F) and +60°C (+140°F)*. The environment should be free of water, water vapor, dust, oily dust, corrosive and inflammable gas or liquids, airborne dust or metal particles, or devices that generate excessive heat.

Note: if the ambient temperature for the ECM-E3 motors is over 40˚C (104°F), refer to Section A.2.3 Power derating curves of the ECM-E3 motors.

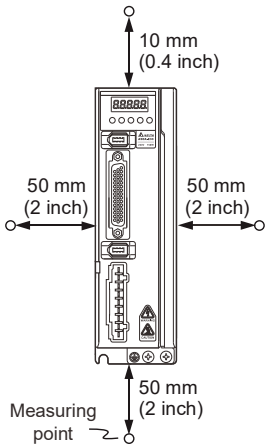

- The ambient temperature for the servo drive is between 0°C (32°F) and 55°C (131°F). During long-term operation, it is advisable to keep the ambient temperature at or below 45°C (113°F) to ensure the servo drive's performance.
- If the ambient temperature is between 45°C (113°F) and 55°C (131°F), place the product in a well-ventilated environment and a **derating of 10% for every temperature increase of 5°C (9°F) is required**.
- The minimum requirements for airflow velocity:

Rated voltage of the servo drive	Required airflow velocity at 10 mm (0.4 inches) above the servo drive
220V	≥ 0.5 m/s
400V	≥ 1.0 m/s

- Mount the product vertically in the control cabinet (see the illustration of the correct mounting direction in Section 2.3).
- Install a fan at the top of the control cabinet for heat dissipation. Make sure the size of the cabinet and its ventilation condition can prevent the internal electrical devices from overheating.
- Check if the vibration of the machine affects the electrical devices in the control cabinet. Ensure that the temperature at the measuring points, which are 50 mm (2 inches) beneath and on both sides of the servo drive, is kept at or below 55°C (131°F), and the servo drive must be kept clear of heat sources.

2.3 Mounting direction and space

Precautions:

2

- Mount the servo drive in the correct direction according to the following illustrations with the base of the heat sink perpendicular to the wall. Incorrect mounting direction may result in malfunction.
- For better ventilation and cooling, allow sufficient space between the AC servo drive and the adjacent objects and the wall, or overheating may result in malfunction.
- Do not block the ventilation slots of the servo drive, and do not mount the servo drive in the incorrect direction, or it may result in malfunction.

Correct

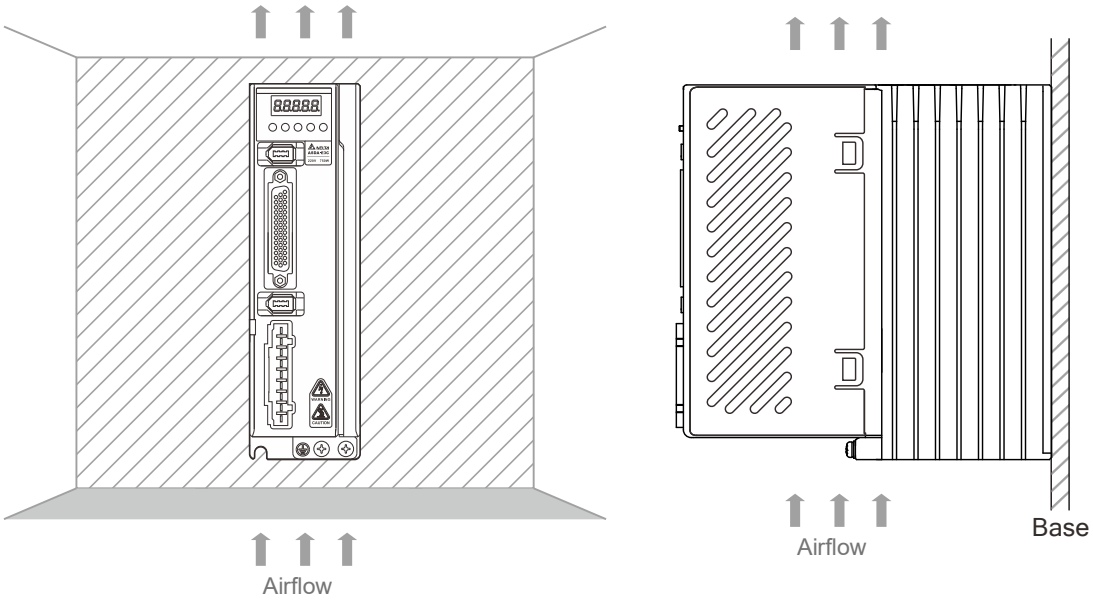

Incorrect

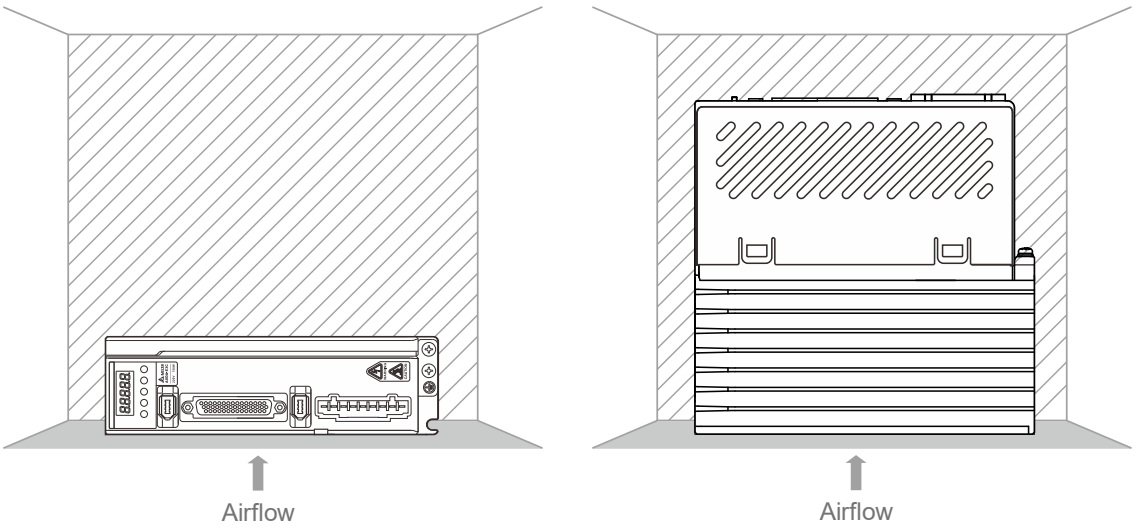

Heat dissipation requirements

- In order to have adequate airflow for ventilation, leave the suggested clearances when installing one or multiple servo drives.
- Avoid mounting one servo drive above another, or the lower drive generates heat which rises and causes temperature increase of the upper drive.

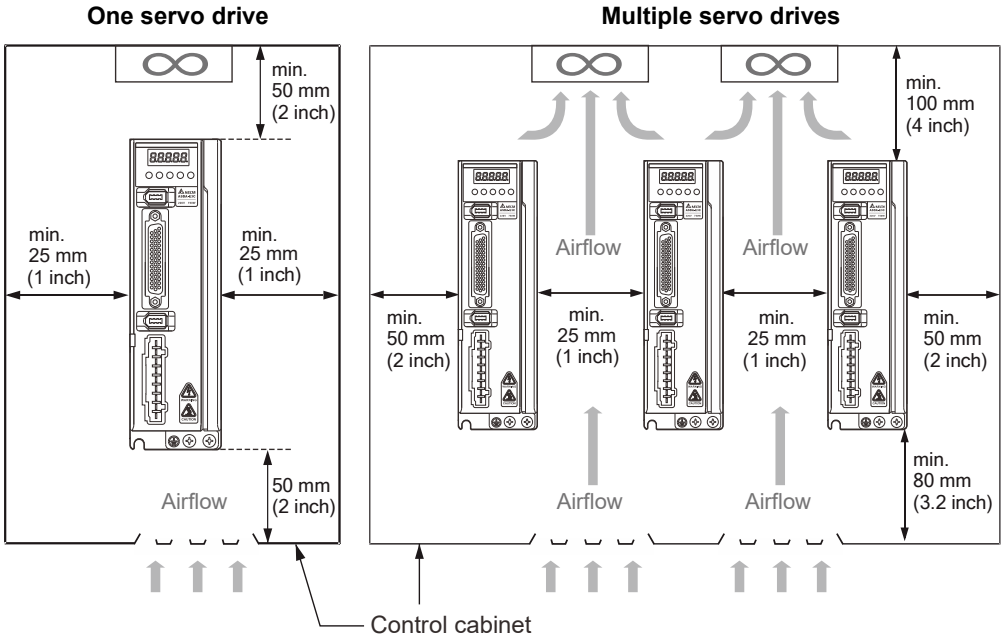

Note: the preceding diagrams are not accurately scaled. Refer to the annotations on the diagrams.

2.4 Safety precautions for using motors

The Delta AC servo motor is designed for industrial applications. It is necessary to fully understand the motor specifications and the content of the user manual. For your safety and correct use, read the precautions carefully before installing the motor on any equipment.

The safety precautions are as follows:

Handling, mounting, and storage

- When taking out or placing the servo motor, hold the whole motor instead of holding the cable or the motor shaft only.
- Do not hit the motor shaft. Impact force will damage the shaft and the encoder that is attached to the rear end of the shaft.
- Keep the axial or radial load on the shaft within the allowable range listed in the specifications.
- The shaft of the servo motor is not water- or oil-proof. Do not use, install, or store the servo motor in an environment that contains water, oily liquids, corrosive and inflammable gases, or an environment with high humidity.
- The material of the motor shaft is not rustproof. Although rustproof oil has been applied to the shaft during the manufacturing process, you must check the shaft condition every three months and apply rustproof oil again if storing the motor for more than six months.
- Ensure that the storage environment of the servo motor conforms to the specifications in the user manual.
- The encoder attached to the motor is easily damaged; take the necessary measures to avoid electromagnetic interference, vibration, and abnormal temperature changes.
- The magnetic field range for placing or installing the motor should be below 10 mT.

Wiring

- If the current exceeds the maximum current in the specifications, the internal parts of the motor may lose their magnetism. Contact the distributor or local Delta sales representative if this problem occurs.
- Check if the motor wiring and the voltage of the motor brake are correct. Also, make sure that the wiring of the encoder power and signal cables is correct. Incorrect wiring will lead to abnormal operation, malfunction, or damage of the motor.
- To avoid capacitive coupling and noise, isolate the motor power cable from the encoder power and signal cables. Do not connect them to the same circuit.
- The AC servo motor must be correctly grounded.
- The encoder connector must not undergo any high voltage test because it may damage the encoder.
- When the motor or brake is undergoing high voltage tests, cut off the external power supply for the controller. To maintain the product lifespan, do not perform this kind of test unless necessary.

Operation

- AC servo motor operation is controlled by the servo drive. Do not directly connect a commercial power supply (100/200V, 50/60 Hz) to the servo motor circuit, or the motor cannot operate normally and may be permanently damaged.
- Follow the motor specifications when using the product. The motor temperature during operation must not exceed the specified range.
- The material of the motor shaft is not rustproof. To ensure a longer motor life, apply rustproof oil during operation.
- The built-in brake is for holding, not for stopping the motor. Note that the built-in brake is not a device for safely stopping the machine. Install another safety device to stop the machine. When the built-in brake is holding the motor, rotation backlash can still occur and the maximum rotation is 1° to 2°. Besides, when a motor with a brake is operating, the brake lining sometimes generates a noise (a swishing or clicking sound) caused by the structure of brake module, which is not a malfunction. It will not affect the motor's function.
- When using a servo motor with a brake, do not use the built-in brake for dynamic braking.
- If any odor, noise, smoke, heat, or abnormal vibration occurs during motor operation, stop the motor and turn off the power immediately.
- If the servo drive is installed in a high-radiation environment, the motor may generate louder noises, but the motor performance will not be affected.

Others

- Delta AC servo motors have no user-replaceable parts.
- Do not disassemble the motor or change its parts, or it will void the warranty.
- Do not disassemble the motor by yourself, or it may lead to permanent malfunction or damage.
- Do not splash any water or oil on the product.

2.4.1 Troubleshooting for the motor operation and status

When the servo motor makes abnormal noises:

Possible cause	Checking method	Corrective action
There is a source of vibration in the connecting components.	Check if there is any foreign object, damage, or deformation in the movable parts of the connecting component.	Replace the connecting components (such as the coupling) or contact the manufacturer.
The encoder is subject to excessive vibration or shocks.	1. Check if the servo motor has been subject to impact force or vibration which causes damage to the encoder. 2. Remove and shake the motor to see if there are any abnormal noises (disk damage). 3. Visually inspect if there's dust on the encoder's rear cover (encoder damage).	Replace the servo motor.

When the servo motor is overheating:

Possible cause	Checking method	Corrective action
Mounting surface of the servo motor has poor thermal conductivity.	Measure the temperatures of the servo motor frame and the mounting surface (metal). The temperature difference should not exceed 20°C (36°F).	Make sure the installation surface is flat. Any substance (such as paint or gasket) between the mounting surface and motor surface can cause poor heat dissipation. Remove the substances or use other methods to improve heat dissipation (such as forced air cooling for the servo motor).

2.4.2 Mounting directions and precautions for the servo motor

You can install the servo motor horizontally or vertically.

Mounting direction	Precautions
Horizontal / Vertical 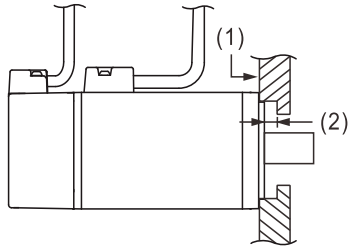	When securing the motor, ensure sufficient contact (1) between the flange face and the mounting surface, and keep enough space (2) between the flange's raised face and the mounting surface. This can prevent interference or an excessive gap between mating surfaces from causing damage to the motor's mounting holes.
Horizontal 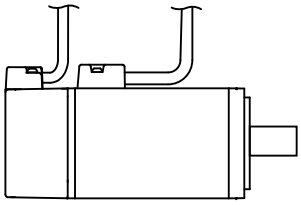	If you are using a servo motor with an oil seal, refer to Section 2.4.5 Oil and water prevention measures for the servo motor.
Vertical - shaft end up 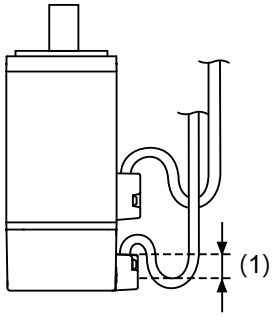	■ When wiring, you need to install an oil trap (1) to prevent water vapor from entering the motor. ■ When installing the servo motor in a machine (such as in a gearbox), you must adhere to the measures in Section 2.4.5 to prevent oil and gas from entering the servo motor.
Vertical - shaft end down 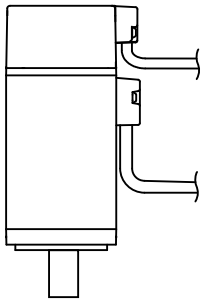	If you are using a servo motor with an oil seal, refer to Section 2.4.5 Oil and water prevention measures for the servo motor.

Note: if you desire to install gears on the servo motor, follow the manufacturer's instructions for installation.

2.4.3 Precautions for using servo motor with oil seal

This section defines the operating conditions for using the servo motor with an oil seal:

2

- In the operating environment, keep the oil level lower than the oil seal lip. If the oil seal lip is lower than the oil level, the oil will enter the servo motor and cause damage to the motor.

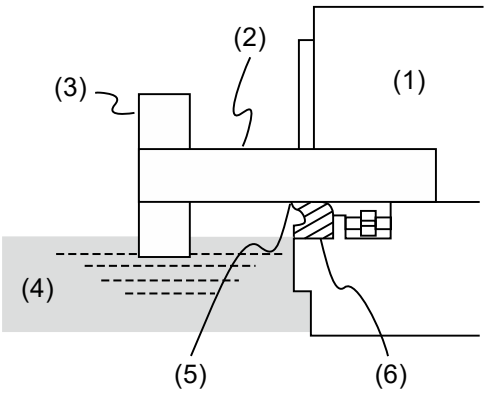

(1) Servo motor; (2) Motor shaft; (3) Gear; (4) Oil; (5) Oil seal lip; (6) Oil seal

- The oil seal cannot be submerged in liquid. It can only withstand splashes of oil.
- The oil seal lip cannot be soaked in oil.

2.4.4 Precautions for installing servo motor accessories

- Wipe off the rustproof coating or oil on the motor shaft.
- If you use a servo motor with a keyway, install the attached key or a key matching the specified dimensions on the motor shaft.
- When installing the key or the motor shaft accessories (such as a belt pulley or gear) to the servo motor, do not apply excessive impact force to the keyway, the accessories (A and B) installed to the motor shaft, or the motor shaft (C). Instead, secure the key or motor shaft accessories using a screwdriver and a screw.

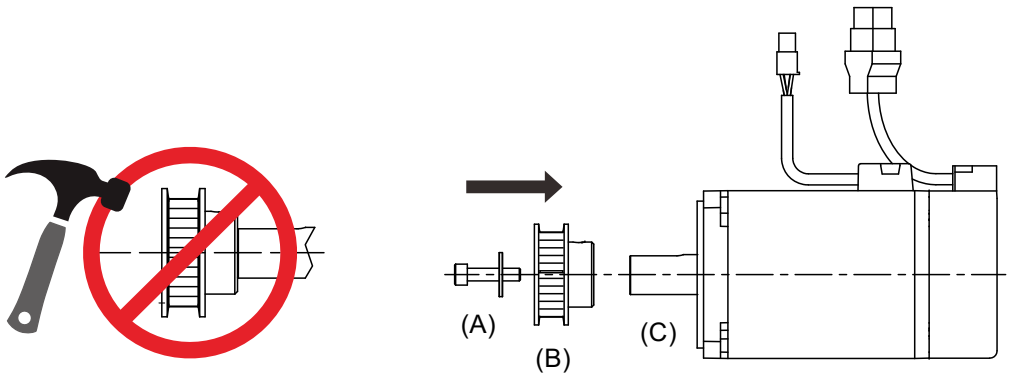

(A) Screw and washer; (B) Belt pulley; (C) Servo motor shaft

Installation safety precautions for coupling applications

- It is suggested that you use the flexible couplings specifically designed for servo motors, especially the double spring couplings, which provide some buffer tolerance during eccentric motion and deflection of the motor. Select a coupling of appropriate size for the operating conditions. Improper use or connection may cause damage to the motor.
- Use a dial gauge or other methods to ensure the centering precision is within the specifications. If you are not allowed to use the dial gauge or other methods in the environment, slide the coupling along both shafts and adjust it until it does not get stuck.

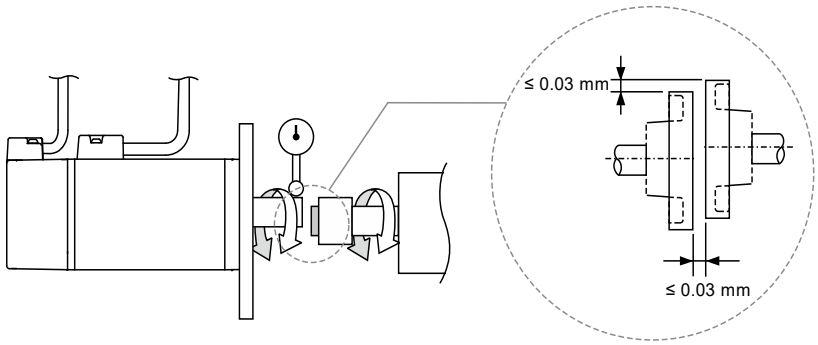

As shown in the preceding figure, the distance is measured at four different positions on the circumference for centering precision. The difference between the maximum and minimum measurements should be 0.03 mm or less. Even within this range, you can make adjustments to increase the centering precision.

Important: when you are doing the measurements, rotate the coupling and motor shafts together.

2

Installation / disassembly safety precautions for motor shaft accessories

- When connecting the shafts, make sure that the required centering precision is reached. If the shafts are not correctly centered, vibration may damage the bearings and encoder.
- When installing the coupling, do not apply excessive force to the shafts or the area around the encoder, as the impact may damage the encoder.

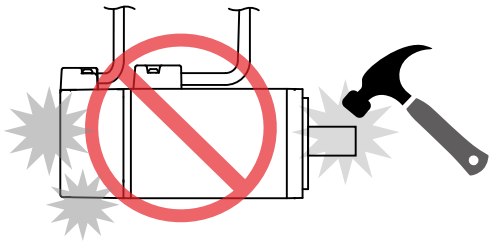

- If the coupling makes any abnormal noise, realign the shafts until the noise disappears.
- Ensure the axial load and radial load are within the specifications. Refer to the specifications of the maximum axial load (N) and maximum radial load (N) for each servo motor.
- Use a bearing puller (D) to remove the motor shaft accessories (such as a coupling, gear, or belt pulley). Do not tug or apply excessive force.

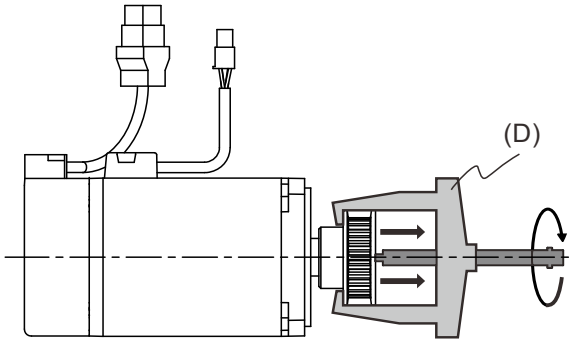

2.4.5 Oil and water prevention measures for the servo motor

Follow these precautions and do not allow water, oil, or other foreign objects to enter the servo motor.

- Do not submerge the cables in oil or water.

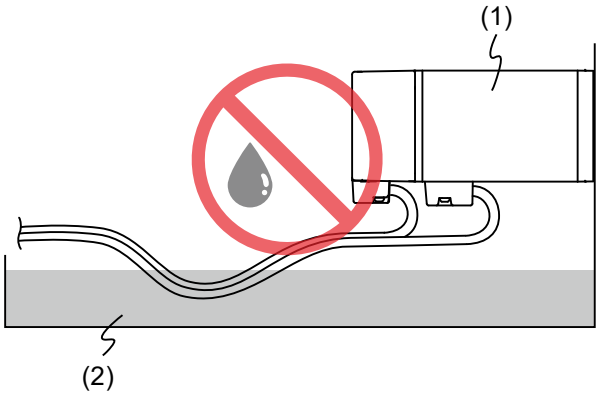

(1) Servo motor; (2) Oil

- If oil or water is unavoidable, use oil-resistant cables. Delta does not provide oil-resistant cables.
- If the servo motor must be mounted with the shaft end up, do not use it in a machine, gearbox, or other environment where the servo motor may have contact with oil or water.

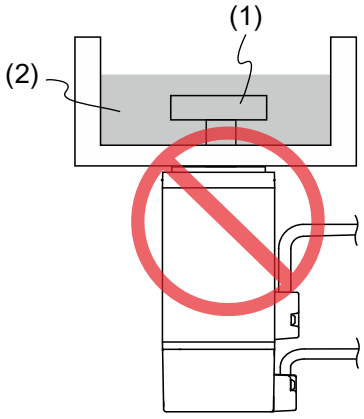

(1) Gear; (2) Oil

- Do not use the servo motor in an environment with cutting fluids. The sealing materials, coated colloids, cables, or other components may be affected or even deteriorated depending on the cutting fluid types.
- Do not continuously expose the servo motor to oil mist, water vapor, oil, water, or grease.

If you cannot avoid using the servo motor under the preceding conditions, take prevention measures to avoid dirt and water from entering the machine.

2.4.6 Measures to suppress temperature increase of the servo motor

- When installing the servo motor, pay attention to the cooling conditions (such as size of the heat sink) provided in the specifications of each servo motor type.
- The heat generated during motor operation is dissipated to the heat sink through the motor mounting surface. Therefore, if the surface area of the heat sink is too small, the temperature of the servo motor may increase abnormally.
- If it is difficult to apply large heat sinks in the operating environment or if the ambient air temperature or altitude exceeds the given specifications, take the following measures:
  1. Reduce the full-load rating of the servo motor. For more details, refer to the specifications of each servo motor type. When selecting servo motors, consider motors with the power capacity 1 to 2 levels higher.
  2. Reduce the acceleration and deceleration of the work cycle to lower the motor load.
  3. Apply external forced air cooling to the servo motor by using cooling fans or other methods.

Important: do not place a gasket or other insulating materials between the servo motor and heat sink, as it may cause motor temperature increase and poor noise immunity, and result in malfunction.

2.5 Specifications for the circuit breaker, magnetic contactor and fuse

220V models

Servo drive model	Circuit breaker	Magnetic contactor	Fuse (Class T)
ASD-E3C-0421-☐	10 A	10 A	10 A
ASD-E3C-0721-☐	10 A	10 A	20 A
ASD-E3C-1021-☐	15 A	15 A	30 A
ASD-E3C-1521-☐	20 A	20 A	30 A

Note:
1. Operation mode: standard.
2. If the servo drive is equipped with a residual-current device (RCD) for electricity leakage protection, select an RCD with current sensitivity of at least 200 mA and with minimum 0.1 sec working time to avoid incorrect operation.
3. Select the Type B residual-current device (RCD) with time delay, as the system ground wire may contain DC electricity.
4. Use the fuse and circuit breaker that comply with the UL / CSA standard.

400V models

Servo drive model	Circuit breaker	Magnetic contactor	Fuse (Class T)
ASD-E3C-1043-☐	10 A	10 A	10 A
ASD-E3C-1543-☐	15 A	15 A	15 A
ASD-E3C-2043-☐	20 A	20 A	20 A
ASD-E3C-3043-☐	35 A	35 A	35 A

Note:
1. Operation mode: standard.
2. If the servo drive is equipped with a residual-current device (RCD) for electricity leakage protection, select an RCD with current sensitivity of at least 200 mA and with minimum 0.1 sec working time to avoid incorrect operation.
3. Select the Type B residual-current device (RCD) with time delay, as the system ground wire may contain DC electricity.
4. Use the fuse and circuit breaker that comply with the UL / CSA standard.

2.6 Installation requirements for EMC

2

This section illustrates the installation requirements for passing the EMC test. Note that the EMC rating varies based on the installation structure or wiring. Delta servo products are designed in accordance with the EMC standards. Refer to the following diagram for the standard installation, through which Delta servo products passed the EMC test.

220V models

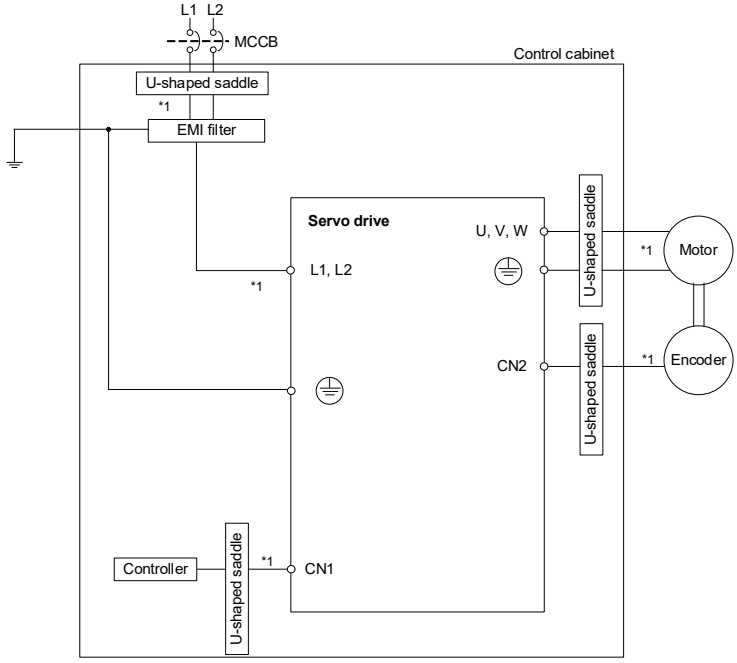

400V models

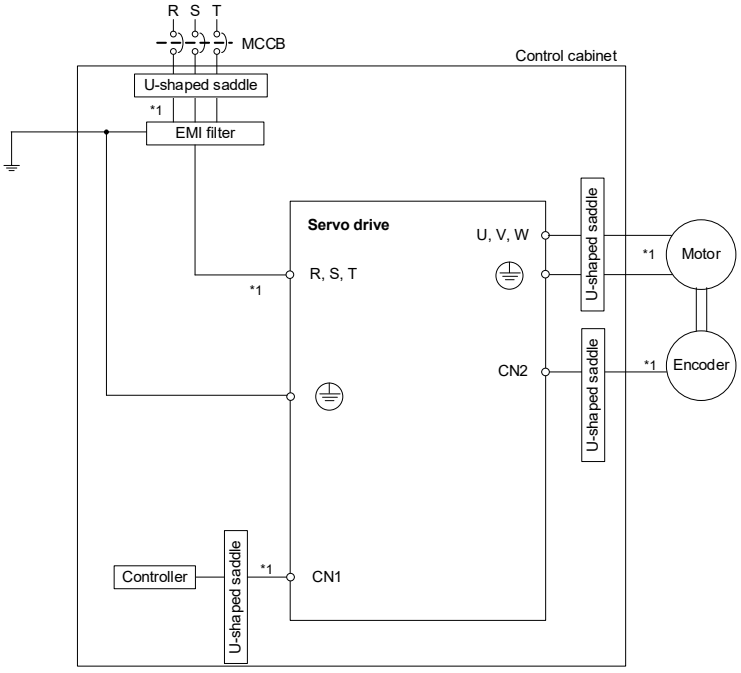

Note:
1. Use shielded wires.

2.6.1 EMI filters

All electronic equipment (including servo drives) generates high or low frequency noise during operation, which interferes with peripheral equipment through conduction or radiation. With an EMI filter correctly installed and used, you can eliminate much of the interference. For optimal performance, it is recommended that you use Delta's EMI filter for suppressing the interference.

220V models

Power	Servo drive model	Recommended EMI filter
400 W	ASD-E3C-0421-☐	EMF023A21A
750 W	ASD-E3C-0721-☐	EMF023A21A
1 kW	ASD-E3C-1021-☐	EMF023A21A
1.5 kW	ASD-E3C-1521-☐	EMF023A21A

400V models

Power	Servo drive model	Recommended EMI filter
1 kW	ASD-E3C-1043-☐	EMF018A43A
1.5 kW	ASD-E3C-1543-☐	EMF018A43A
2 kW	ASD-E3C-2043-☐	EMF018A43A
3 kW	ASD-E3C-3043-☐	EMF018A43A

General precautions for installation

To ensure the optimal performance of the EMI filter, apart from the installation and wiring instructions of the servo drive in the user manual, pay attention to these precautions:

- The servo drive and EMI filter must be mounted on the same metal plate.
- The wiring should be as short as possible.
- The metal plate must be well grounded.
- It is recommended that you install one servo drive with one EMI filter.

Refer to the following standards for more specifications of EMI filter installation:

- EN 61000-6-4 (2001)
- EN 61800-3 (2004) PDS of category C2
- EN 55011+A2 (2007) Class A Group 1

2

Motor power cable selection and installation precautions

The selection of motor power cable (refer to Appendix B Accessories) and installation accuracy determine the performance of the EMI filter. Follow these precautions:

- Use a cable that has braided shielding (the effect of double shielding is better).
- The shield on both ends of the motor power cable should be grounded with the shortest distance and the largest contact area.
- Remove the protective paint on the U-shaped saddle and metal plate to ensure good contact. See the following figure.
- Correctly connect the braided shielding of the motor power cable and the metal plate: fix the braided shielding on both ends of the motor power cable with the U-shaped saddle and metal plate. See the following figure.

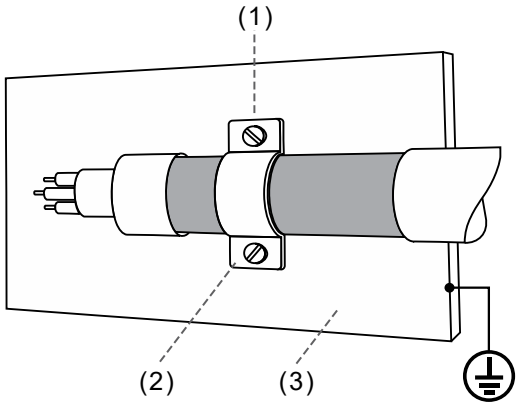

(1) Remove the protective paint on the U-shaped saddle and metal plate to ensure good contact

(2) U-shaped saddle

(3) Well-grounded metal plate

2.7 Selecting the regenerative resistor

Some of the Delta servo drive models have a built-in regenerative resistor, and you can use an external regenerative resistor if needed. When the direction of torque is opposite to the moving direction of the object, the regenerative energy returns to the servo drive from the load. This energy is turned into electricity in the capacitor of the DC Bus and thus increases the voltage. When the voltage reaches the DC Bus protection value, the excess energy is consumed by a regenerative resistor.

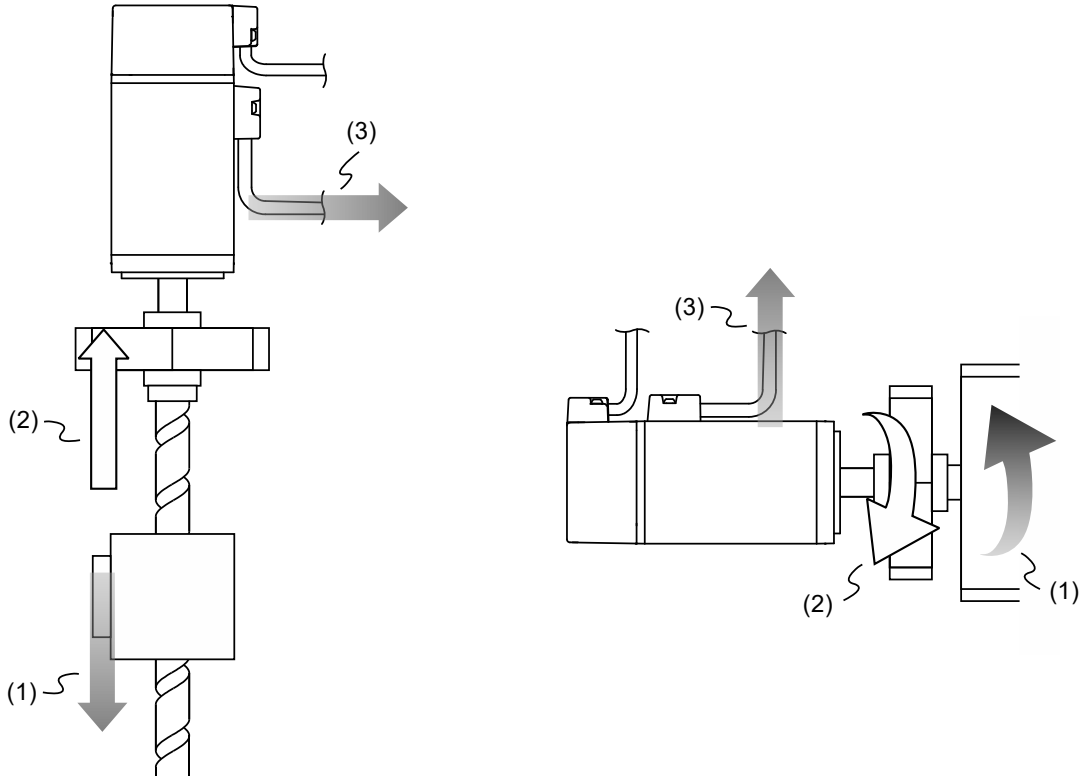

(1) Moving direction of the object; (2) Direction of torque; (3) Regenerative energy

220V models

E3C-L:

Servo drive model	Specifications of the built-in regenerative resistor		Capacity of the built-in regenerative resistor (Watt)	Minimum allowable resistance value (reference for external resistor) (ohm)
	Resistance (ohm)	Capacity (Watt)		
ASD-E3C-0421-☐	-	-	-	60
ASD-E3C-0721-☐	100	36	18	60
ASD-E3C-1021-☐	100	40	20	30
ASD-E3C-1521-☐	100	40	20	30

E3C-L1:

Servo drive model	Specifications of the built-in regenerative resistor		Capacity of the built-in regenerative resistor (Watt)	Minimum allowable resistance value (reference for external resistor) (ohm)
	Resistance (ohm)	Capacity (Watt)		
ASD-E3C-0421-L1	100	36	18	60

2

400V models

E3C-L:

Servo drive model	Specifications of the built-in regenerative resistor		Capacity of the built-in regenerative resistor (Watt)	Minimum allowable resistance value (reference for external resistor) (ohm)
	Resistance (ohm)	Capacity (Watt)		
ASD-E3C-1043-☐	100	80	40	80
ASD-E3C-1543-☐	100	80	40	60
ASD-E3C-2043-☐	50	80	40	45
ASD-E3C-3043-☐	50	80	40	40

When the regenerative energy exceeds the capacity of the built-in regenerative resistor, use an external regenerative resistor. Pay special attention to the following when using a regenerative resistor:

- Correctly set the resistance value (P1.052) and capacity (P1.053) for the regenerative resistor; otherwise, it might affect the performance.
- When using an external regenerative resistor, ensure the total resistance value is no less than the minimum allowable resistance value of the servo drive.

  The general application is to connect multiple resistors in series. If the resistance value exceeds the setting range, you can reduce the value by connecting the resistors in parallel. If you want to connect the resistors in parallel to increase the capacity of the regenerative resistors, make sure the resistance value meets the requirements.

  See the following for connecting the regenerative resistors in series and in parallel.

Connect to one external regenerative resistor	Connect to external regenerative resistors (serial connection)	Connect to external regenerative resistors (parallel connection)
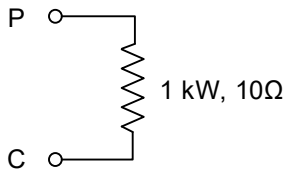	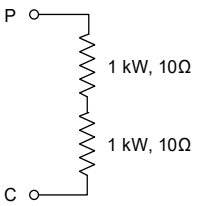	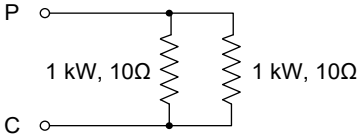
P1.052 = 10 (Ω) P1.053 = 1000 (W)	P1.052 = 20 (Ω) P1.053 = 2000 (W)	P1.052 = 5 (Ω) P1.053 = 2000 (W)

- Normally, if the average regenerative energy is within the rated capacity of regenerative resistor, the temperature of the resistor can increase to 120°C (248°F) or even higher when the motor continues to return the regenerative energy. For safety reasons, apply forced cooling to reduce the temperature of the regenerative resistor. Alternatively, you can use the regenerative resistors equipped with thermal switches. Contact the manufacturer for the load characteristics of the regenerative resistor.

When installing an external regenerative resistor, connect the resistor to P and C contacts, and leave the P and D contacts open. Choose the external regenerative resistors of the corresponding resistance values according to the table on the preceding pages. For easy calculation of the required regenerative resistor capacity, disregard the energy consumed by IGBT and choose the capacity of the external regenerative resistor according to the selected rotary motor.

Rotary motor:

Selecting the regenerative energy

(a) When there is no external torque

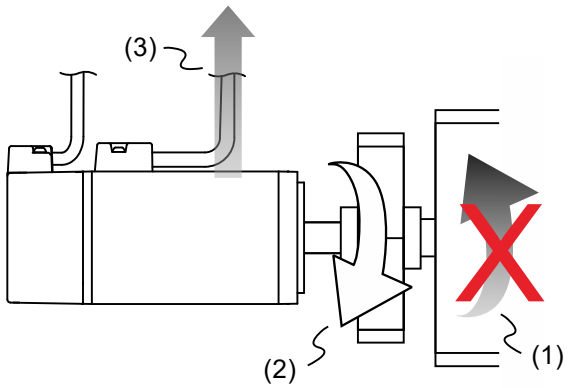

(1) Moving direction of the object; (2) Direction of torque;

(3) Regenerative energy generated during motor deceleration

If the motor is making a reciprocating motion, the regenerative resistor consumes the excess regenerative energy. Refer to the table on the next page when making calculations and selecting the required regenerative resistor.

220V models

Power	Servo drive model	Maximum regenerative energy that can be absorbed by the capacitor Ec (joule)
400 W	ASD-E3C-0421-☐	8.42
750 W	ASD-E3C-0721-☐	17.47
1 kW	ASD-E3C-1021-☐	26.21
1.5 kW	ASD-E3C-1521-☐	26.21

400V models

Power	Servo drive model	Maximum regenerative energy that can be absorbed by the capacitor Ec (joule)
1 kW	ASD-E3C-1043-☐	14.66
1.5 kW	ASD-E3C-1543-☐	17.47
2 kW	ASD-E3C-2043-☐	31.2
3 kW	ASD-E3C-3043-☐	31.2

2

Assuming that the load inertia is N times the motor inertia, when the motor decelerates from operation speed to a stop, the regenerative energy is (N + 1) × Eo and the regenerative resistor needs to consume (N + 1) × Eo - Ec joules. Assuming that the reciprocating motion cycle is T sec, then the required capacity of regenerative resistor = 2 × ((N + 1) × Eo - Ec) / T.

The calculation is as follows:

Step	Item	Calculation and setting method
1	Set the capacity of the regenerative resistor to the maximum.	Set P1.053 to the maximum value.
2	Set the reciprocating motion cycle (T).	Manual input.
3	Set the rotation speed (wr).	Manual input or read motor operation speed with P0.002 (Drive status).
4	Set the ratio (N) of load inertia to the motor inertia.	Manual input or read the ratio with P0.002 (Drive status).
5	Calculate the maximum regenerative energy (Eo).	Eo = Rotor inertia × (rotation speed (wr))^2 / 182
6	Check the maximum regenerative energy that can be absorbed by the drive (Ec).	Refer to the table on the preceding page.
7	Calculate the required capacity of the regenerative resistor.	2 × ((N + 1) × Eo - Ec) / T
8	Set parameters according to the resistor specification	Set P1.052 and P1.053 correctly.

Example:

For the 400 W motor (ECM-E3M-CM0604RSE), its rotor inertia is 0.254 × 10^{-4}. When the reciprocating motion cycle (T) is 0.4 sec, the motor operation speed is 3,000 rpm, and the load inertia is 15 times the motor inertia:

The maximum regenerative energy (Eo) = (0.254 × 10^{-4}) x $(3000)^2$ / 182 = 1.26 joules

The maximum regenerative energy that can be absorbed by the drive (Ec) = 8.42 joules (listed in the table on the preceding page).

The required capacity of the regenerative resistor:

$$\frac{2 \times ((N + 1) \times Eo - Ec)}{T} = \frac{2 \times ((15 + 1) \times 1.26 - 8.42)}{0.4} = 58.7 \text{ W}$$

From the preceding calculation, the required capacity of the regenerative resistor is 58.7 W. Since the 400 W servo drive does not have a built-in regenerative resistor, an **external** regenerative resistor of 120 W is needed. In general, the built-in regenerative resistor can meet the requirement when the external load is not too great.

(b) When there is external torque and the motor does negative work

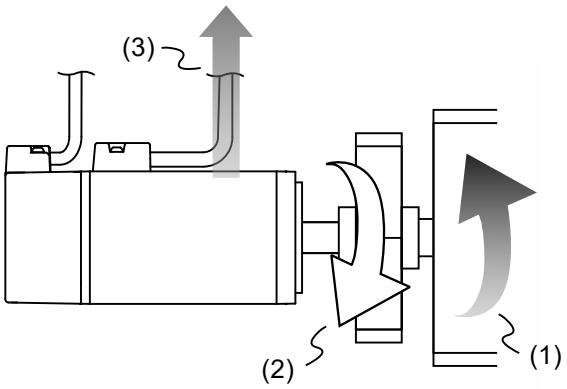

(1) Moving direction of the object; (2) Direction of torque; (3) Regenerative energy

Usually, when the motor does positive work, the motor's torque direction is identical to the rotation direction. However, in some circumstances, the motor's torque direction is opposite to the rotation direction. This means the motor is doing negative work and the external energy is applied to the servo drive through the motor. For instance, if the external force direction is identical to the rotation direction (such as downward motion of the vertically-mounted machine), the servo system outputs more power to counterbalance the excessive external force (the weight of the vertically-mounted machine) in order to keep up with the specified target speed. In this case, considerable energy returns to the servo drive. When the DC Bus capacitor is fully charged and cannot store more energy, the excess energy is consumed by the regenerative resistor.

Example:

For the 400 W motor (ECM-E3M-CM0604RSE), when the torque of the external load is +70% of the rated torque (1.27 N·m) with the rotation speed up to 3,000 rpm, the required external regenerative resistor is: $2 \times (0.7 \times 1.27) \times (\frac{3000 \times 2 \times \pi}{60}) = 558$ W.

Therefore, a regenerative resistor of 560 W and 60Ω* is needed.

Note: the minimum allowable resistance value is 60Ω for the external resistor of the 400 W servo drive.

2.8 The use of electromagnetic brake

2

An electromagnetic brake is usually used for motions in the Z-axis direction to prevent the machine from falling because of gravity. This reduces the need for the motor to continuously produce excessive counteracting force; otherwise, excessive heat could be generated and thus shorten motor life. To avoid incorrect operation, the electromagnetic brake can be activated only when the servo is switched off. The drive controls the electromagnetic brake with DO. If DO.BRKR is set to Off, it means the electromagnetic brake is deactivated and the motor is held; if DO.BRKR is set to On, it means the electromagnetic brake is activated and the motor can run freely. You can use MBT1 (P1.042) and MBT2 (P1.043) for the delay time settings.

Timing diagram of electromagnetic brake control:

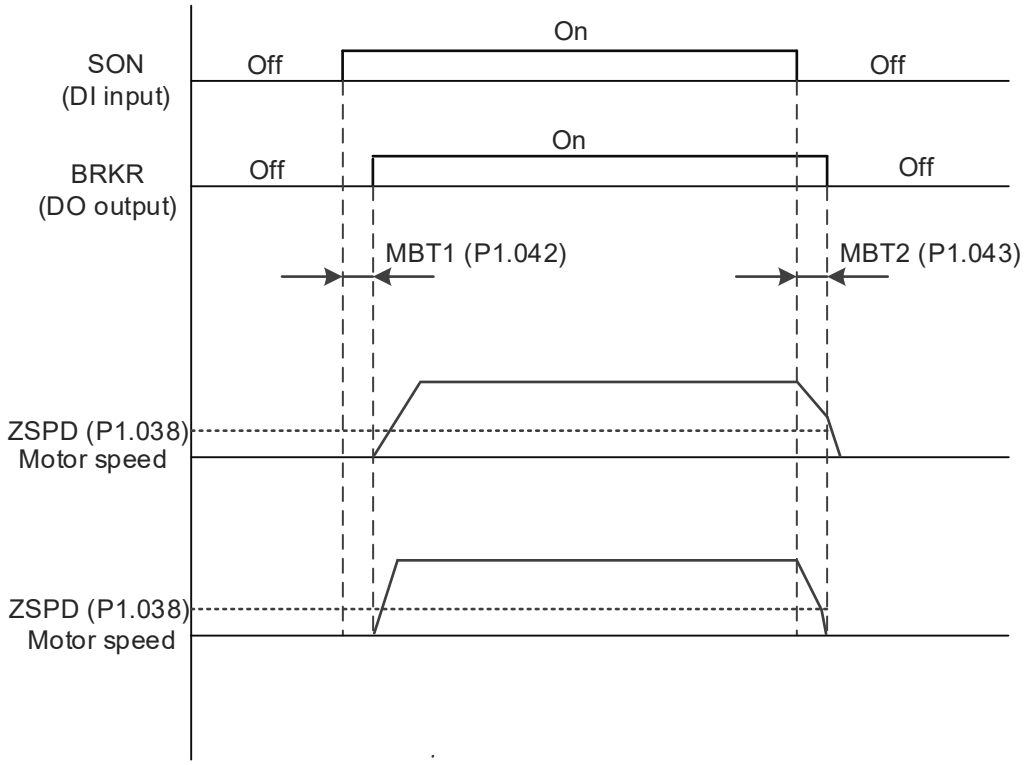

Output timing of the DO.BRKR signal:

1. When the servo drive is off and the time set by P1.043 is exceeded, but the motor speed is still higher than the speed set by P1.038, DO.BRKR is Off (the motor is held).
2. When the servo drive is off and the time set by P1.043 is not yet reached, but the motor speed is already lower than the speed set by P1.038, DO.BRKR is Off (the motor is held).

When the motor runs normally (Servo On), DO.BRKR (0x08) should be set to On, it means the electromagnetic brake is activated and the motor can run freely. Use the emergency stop button in an emergency to cut off the circuit and set DI.EMGS (0x21) to On. Then, AL013 is triggered, and the motor is immediately stopped.

Wiring of the electromagnetic brake:

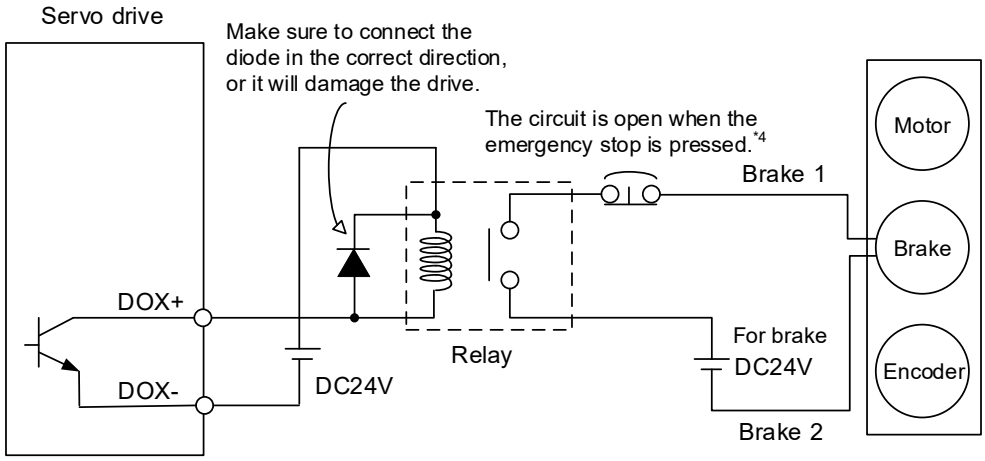

Note:
1. Refer to Chapter 3 Wiring.
2. Power supply for the brake is 24 V_{DC}; do not share the same power supply with control signals.
3. There is no polarity for the brake coil.
4. Pressing the emergency stop button during motor operation may cause damage to the brake.

Calculate the brake's rated current (ECM-E3M-CM0604RSE is used as an example here).

Brake power consumption (at 20°C (68°F)) = 7.6 W (refer to Appendix A Specifications), so the brake's rated current = $\frac{7.6\ W}{24V}$ = 0.32 A.

2.9 The use of cable

Precautions:

- Prevent the termination point between the connector and the cable from being subject to weight (including that of the attachments) or bending stress.
- If bending the cable is required, start bending it at least 20 mm (0.79 inches) from the termination point between the connector and the cable. The suggested bend radius is greater than 10 times the cable outer diameter.
- Avoid scraping, crushing, or stepping on the cable. This can damage the inner wires even when the cable seems intact on the outside.
- Do not twist the cable when installing.
- Inappropriate installation and wrong usage shorten the cable lifespan.

Standard cable:

- Do not use a standard cable when the application requires the cable to move or bend. If required, use a flexible cable instead.

Flexible cable:

- Do not fix the cable on or near the bending part, otherwise the cable may break.
- After cable fixation, make sure the cable can be moved with ease, so that it does not create excessive tension on the bending or fixation part.
- Excessive cable length causes unnecessary bending, while insufficient cable length leads to breakage due to the excessive tension on the cable fixation part. Estimate the suitable cable length by dragging the cable carrier to the longest and shortest possible lengths.

Cable is too long	Cable is too short
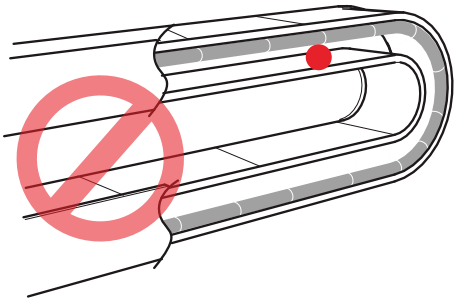	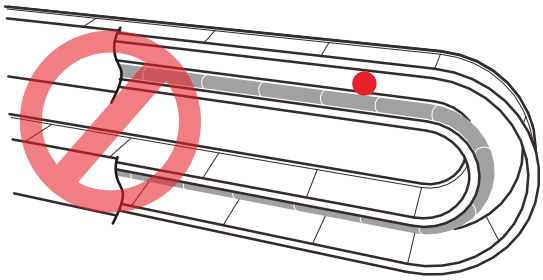

Appropriate cable length, with clearance on both sides of cable

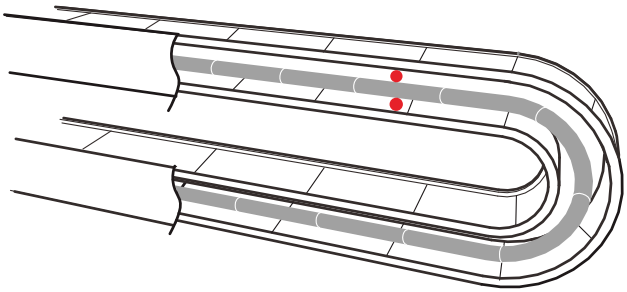

- When installing the cable carrier, avoid contact between the cables. Do not stack the cables one above the other; use dividers to prevent cable entanglement instead.
- Do not bend the flexible cable under any normal circumstances. Refer to Section 3.1.5.5 for the detailed flexible cable specifications.

3 Wiring

This chapter illustrates the power supply circuit, connectors, and wiring for each control mode of the E3C-L servo drive.

3.1 System connection ····· 3-3
3.1.1 220V models servo system connection ····· 3-3
3.1.1.1 Connecting to peripheral devices ····· 3-3
3.1.1.2 Connectors and terminals of the servo drive ····· 3-4
3.1.1.3 Wiring for power supply ····· 3-5
3.1.1.4 Wiring diagrams for the servo system ····· 3-6
3.1.2 400V models servo system connection ····· 3-7
3.1.2.1 Connecting to peripheral devices ····· 3-7
3.1.2.2 Connectors and terminals of the servo drive ····· 3-8
3.1.2.3 Wiring for power supply ····· 3-9
3.1.2.4 Wiring diagrams for the servo system ····· 3-10
3.1.3 Power connector specifications ····· 3-11
3.1.3.1 F40 - F80 motors – Power connectors ····· 3-11
3.1.3.2 F100 - F130 motors – Power connectors ····· 3-12
3.1.3.3 F180 motors – Power connectors ····· 3-13
3.1.3.4 F100 - F180 motors – Brake connectors ····· 3-13
3.1.4 Encoder connector specifications ····· 3-14
3.1.4.1 F40 - F80 motors – Encoder connectors ····· 3-14
Standard connector ····· 3-14
Bulkhead connector ····· 3-15
3.1.4.2 F100 - F180 motors – Encoder connectors ····· 3-16
3.1.5 Wire selection ····· 3-17
3.1.5.1 Wire and terminal specifications ····· 3-17
3.1.5.2 Crimping the wire ferrules ····· 3-18
3.1.5.3 Encoder cable specifications ····· 3-19
3.1.5.4 Power cable specifications ····· 3-20
3.1.5.5 Flexible cable specifications ····· 3-23
3.1.6 Waterproof connector wiring instructions ····· 3-24
3.1.6.1 F40 - F80 motors – Power / Encoder / Brake connectors ····· 3-24
3.1.6.2 F100 - F180 motors – Power connectors ····· 3-26
3.1.6.3 F100 - F180 motors – Encoder / Brake connectors ····· 3-27

3.1.6.4 Waterproof connector installation and wiring specifications ····· 3-28
3.2 Wiring for the CN1 I/O connector ····· 3-29
3.2.1 CN1 I/O connector pin assignment ····· 3-29
3.2.2 CN1 I/O connector signal description ····· 3-31
3.2.3 CN1 wiring diagrams ····· 3-36
3.3 Wiring for the CN2 encoder connector ····· 3-43
3.3.1 F40 - F80 motors – Encoder cables ····· 3-44
3.3.2 F100 - F180 motors – Encoder cables ····· 3-45
3.3.3 Installing shielded wires for CN2 connector ····· 3-46
3.4 Wiring for the CN3 connector ····· 3-47
3.5 Standard wiring example ····· 3-49
3.5.1 Position (PT) control mode – differential line driver input ····· 3-49
3.5.2 Position (PT) control mode – open collector input ····· 3-50
3.5.3 Position (PR) control mode – internal position commands ····· 3-51
3.5.4 Speed (S/Sz) control mode ····· 3-52
3.5.5 Torque (T/Tz) control mode ····· 3-53

3.1 System connection

3.1.1 220V models servo system connection

3.1.1.1 Connecting to peripheral devices

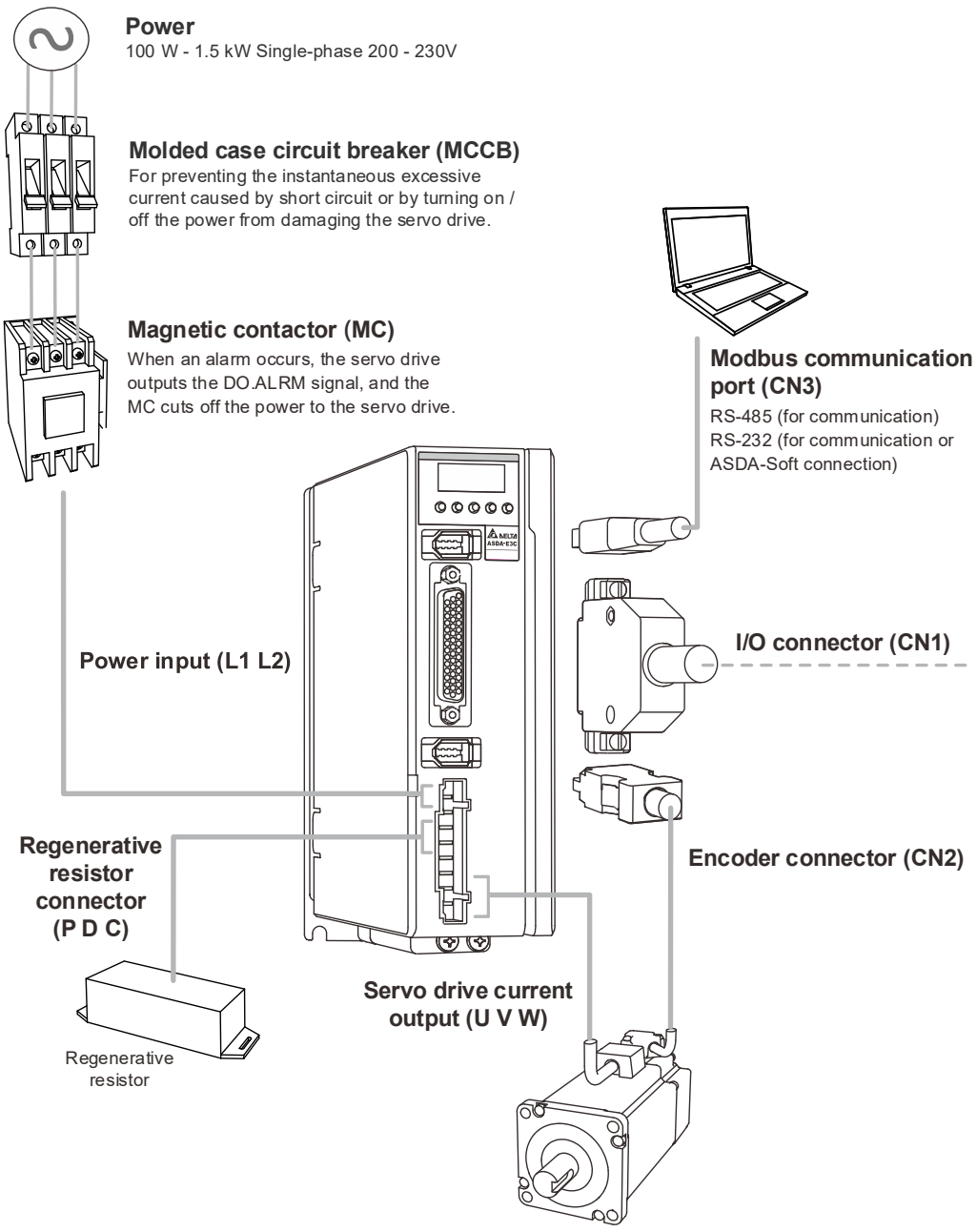

Installation precautions:

1. Make sure the power supply and wiring for the L1, L2 terminals are correct. Refer to the specifications of the servo drives in Appendix A for the correct voltage input to avoid any damage to the servo drive and dangerous operating conditions.
2. Make sure the U, V, W terminals are correctly wired to avoid abnormal operation of the motor.
3. When an external regenerative resistor is used, P and D contacts should be left open, and the external regenerative resistor should connect to P and C contacts. When the built-in regenerative resistor is used, P and D contacts should be short-circuited, and P and C contacts should be left open.
4. When an alarm occurs or the system is under emergency stop status, use DO.ALRM or DO.WARN to switch off the magnetic contactor (MC) to cut off the power to the servo drive.

3.1.1.2 Connectors and terminals of the servo drive

<table>
<tr><th>Terminal</th><th>Name</th><th colspan="3">Description</th></tr>
<tr><td>L1, L2</td><td>Power input</td><td colspan="3">Connect to single-phase AC power.
(Refer to the model specification for the proper input voltage.)</td></tr>
<tr><td rowspan="5">U, V, W</td><td rowspan="5">Terminals for motor connection</td><td colspan="3">Connect to the servo motor.</td></tr>
<tr><td>Terminal</td><td>Wire color</td><td>Description</td></tr>
<tr><td>U</td><td>Red</td><td rowspan="3">Connection terminals for the three-phase main power cable to the motor.</td></tr>
<tr><td>V</td><td>White</td></tr>
<tr><td>W</td><td>Black</td></tr>
<tr><td rowspan="3">P, D, C, ⊖</td><td rowspan="3">Terminals for the regenerative resistor or regenerative unit</td><td colspan="2">Use the built-in resistor</td><td>Short-circuit P & D contacts, and leave P & C contacts open.</td></tr>
<tr><td colspan="2">Use an external resistor</td><td>Connect the resistor to P & C contacts, and leave P & D contacts open.</td></tr>
<tr><td colspan="2">Use an external regenerative unit</td><td>Connect the regenerative unit to P & ⊖ contacts, and leave P & D contacts and P & C contacts open.</td></tr>
<tr><td>⏚</td><td>Ground terminals</td><td colspan="3">Connect to the ground wires for the power and servo motor.</td></tr>
<tr><td>CN1</td><td>I/O connector</td><td colspan="3">Connect to the controller. Refer to Section 3.2 for more information.</td></tr>
<tr><td>CN2</td><td>Encoder connector</td><td colspan="3">Connect to the encoder. Refer to Section 3.3 for more information.</td></tr>
<tr><td>CN3</td><td>Modbus communication port</td><td colspan="3">For communication via RS-485 or RS-232 (PC connection via RS-232 only). Refer to Section 3.4 for more information.</td></tr>
</table>

Pay special attention to the following when wiring:

1. When the power is off, do not touch L1, L2, and U, V, W, and P, D, C, ⊖ wires since the built-in capacitor of the servo drive can still contain a dangerously large amount of electric charge. Wait until the “CHARGE” indicator is off.
2. Separate the L1, L2 power cable and the UVW power cable from other signal cables. The separation distance should be at least 30 cm (11.8 inches).
3. For the encoder cable used to connect CN2, use a twisted-pair cable with metal braided shielding that conforms to the UL2464 standard.
4. When using RS-485 or RS-232 communication, use a shielded twisted-pair cable to ensure the communication quality.
5. Do not use any external capacitors, or it may damage the servo drive.

3.1.1.3 Wiring for power supply

The servo drive only supports single-phase wiring for the power supply.

In the following diagram, Power 1 and ALRM_RY_A are normally open contacts, and Power 2 is a normally closed contact. MC (magnetic contactor) is the power relay and the contact for the power input.

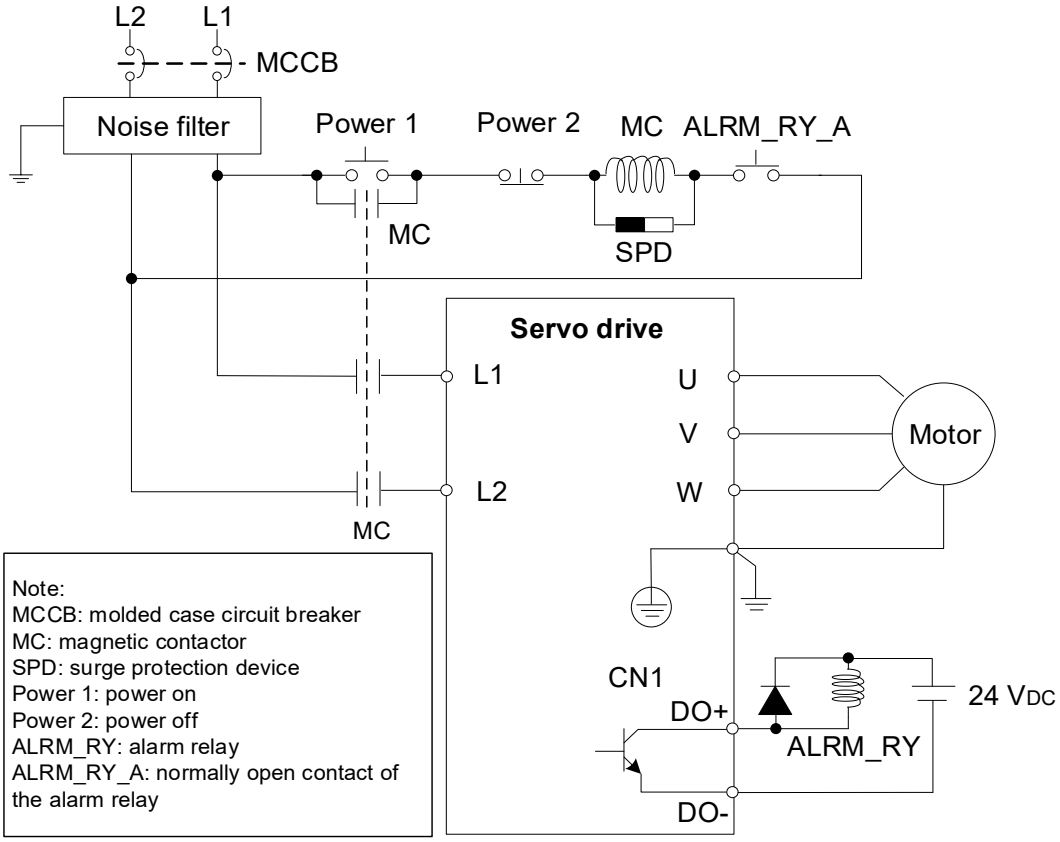

Note: perform wiring according to the actual DO parameter configurations of each model.

3

3.1.1.4 Wiring diagrams for the servo system

400 W - 1.5 kW models

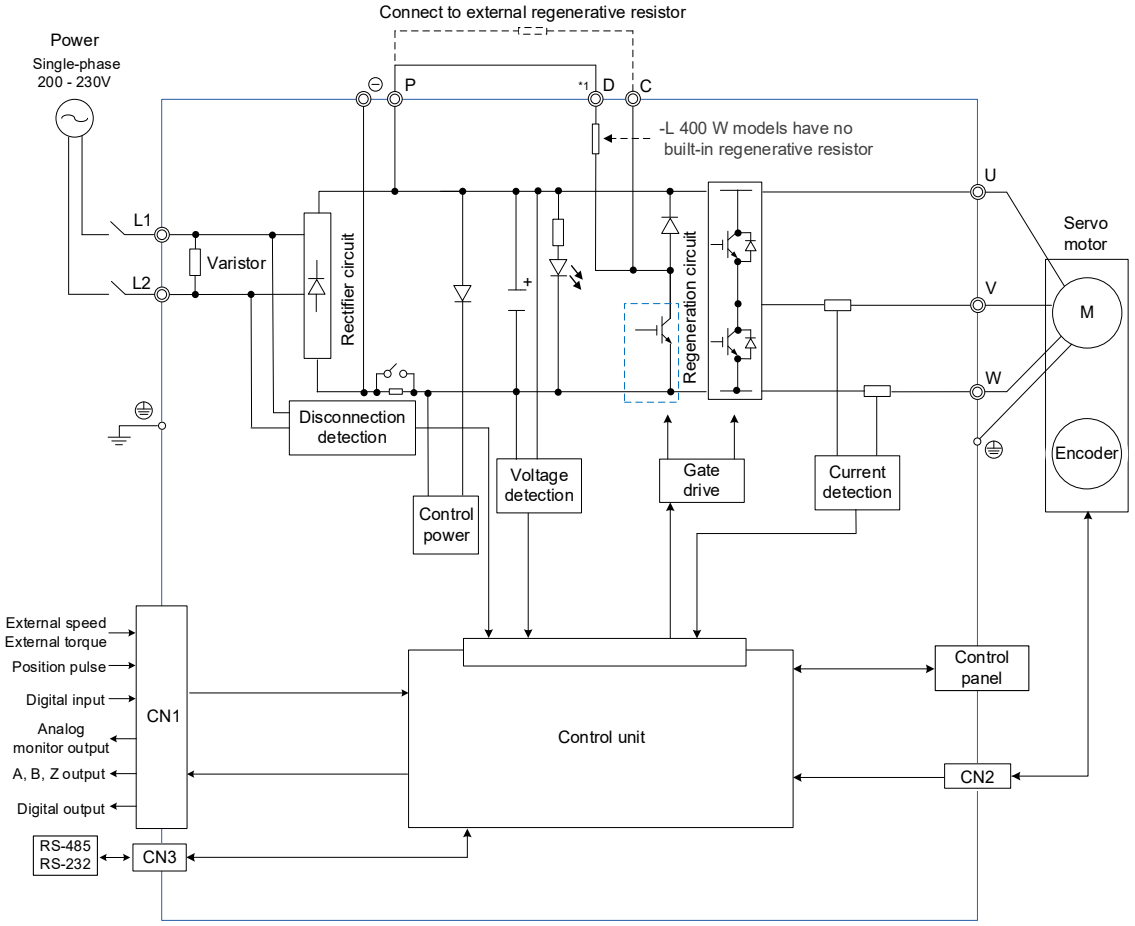

Note:

1. The D contact in -L 400 W models has no function.

3.1.2 400V models servo system connection

3.1.2.1 Connecting to peripheral devices

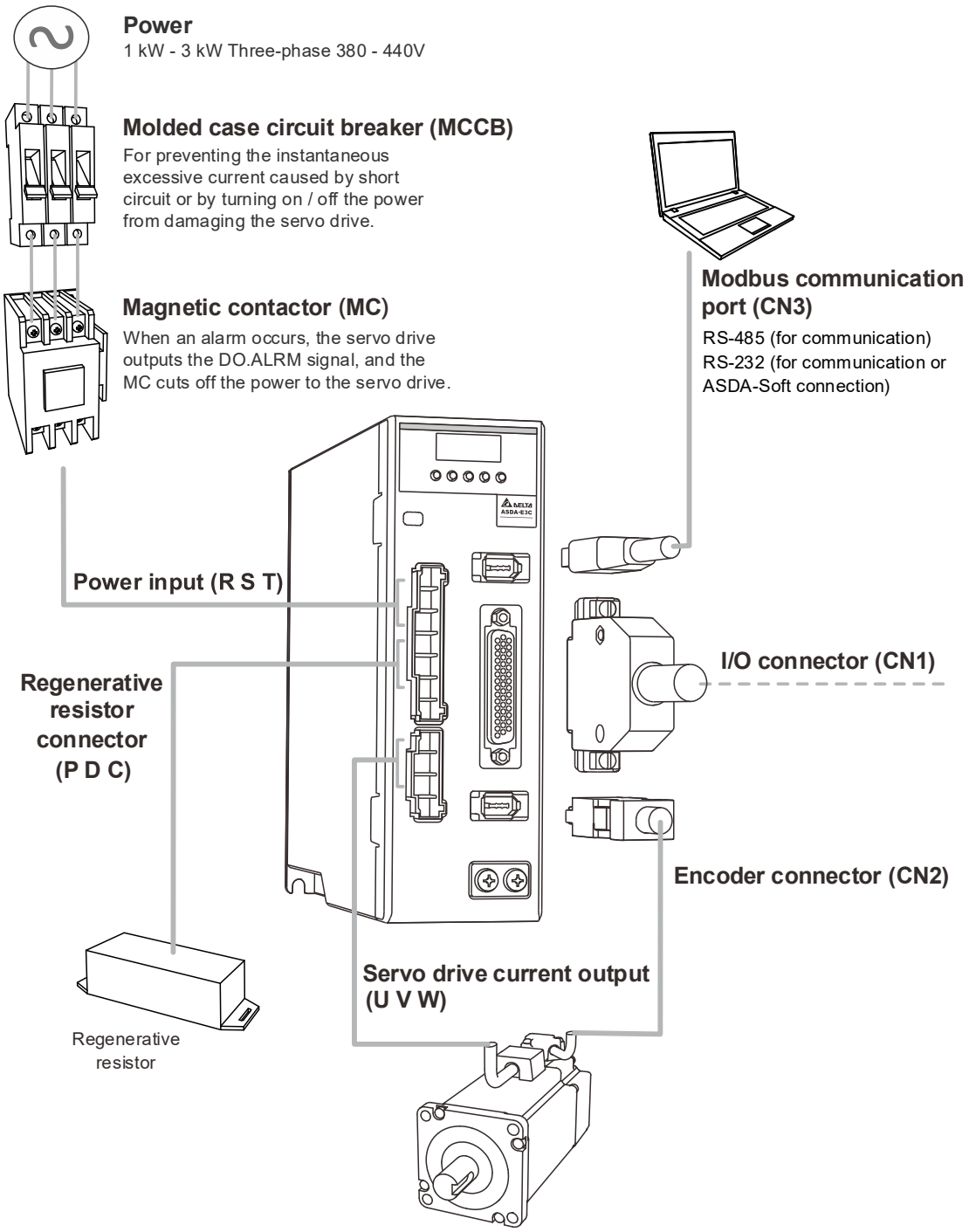

3.1.2.2 Connectors and terminals of the servo drive

<table>
<tr><th>Terminal</th><th>Name</th><th colspan="3">Description</th></tr>
<tr><td>R, S, T</td><td>Power input</td><td colspan="3">Connect to three-phase AC power.
(Refer to the model specification for the proper input voltage.)</td></tr>
<tr><td rowspan="5">U, V, W</td><td rowspan="5">Terminals for motor connection</td><td colspan="3">Connect to the servo motor.</td></tr>
<tr><td>Terminal</td><td>Wire color</td><td>Description</td></tr>
<tr><td>U</td><td>Red</td><td rowspan="3">Connection terminals for the three-phase main power cable to the motor.</td></tr>
<tr><td>V</td><td>White</td></tr>
<tr><td>W</td><td>Black</td></tr>
<tr><td rowspan="3">P, D, C, ⊖</td><td rowspan="3">Terminals for the regenerative resistor or regenerative unit</td><td colspan="2">Use the built-in resistor</td><td>Short-circuit P & D contacts, and leave P & C contacts open.</td></tr>
<tr><td colspan="2">Use an external resistor</td><td>Connect the resistor to P & C contacts, and leave P & D contacts open.</td></tr>
<tr><td colspan="2">Use an external regenerative unit</td><td>Connect the regenerative unit to P & ⊖ contacts, and leave P & D contacts and P & C contacts open.</td></tr>
<tr><td>⏚</td><td>Ground terminals</td><td colspan="3">Connect to the ground wires for the power and servo motor.</td></tr>
<tr><td>CN1</td><td>I/O connector</td><td colspan="3">Connect to the controller. Refer to Section 3.2 for more information.</td></tr>
<tr><td>CN2</td><td>Encoder connector</td><td colspan="3">Connect to the encoder. Refer to Section 3.3 for more information.</td></tr>
<tr><td>CN3</td><td>Modbus communication port</td><td colspan="3">For communication via RS-485 or RS-232 (PC connection via RS-232 only). Refer to Section 3.4 for more information.</td></tr>
</table>

Pay special attention to the following when wiring:

1. When the power is off, do not touch R, S, T, and U, V, W, and P, D, C, ⊖ wires since the built-in capacitor of the servo drive can still contain a dangerously large amount of electric charge. Wait until the “CHARGE” indicator is off.
2. Separate the RST power cable and the UVW power cable from other signal cables. The separation distance should be at least 30 cm (11.8 inches).
3. For the encoder cable used to connect CN2, use a twisted-pair cable with metal braided shielding that conforms to the UL2464 standard.
4. When using RS-485 or RS-232 communication, use a shielded twisted-pair cable to ensure the communication quality.
5. Do not use any external capacitors, or it may damage the servo drive.

3.1.2.3 Wiring for power supply

The servo drive only supports single-phase wiring for the power supply.

In the following diagram, Power 1 and ALRM_RY_A are normally open contacts, and Power 2 is a normally closed contact. MC (magnetic contactor) is the power relay and the contact for the power input.

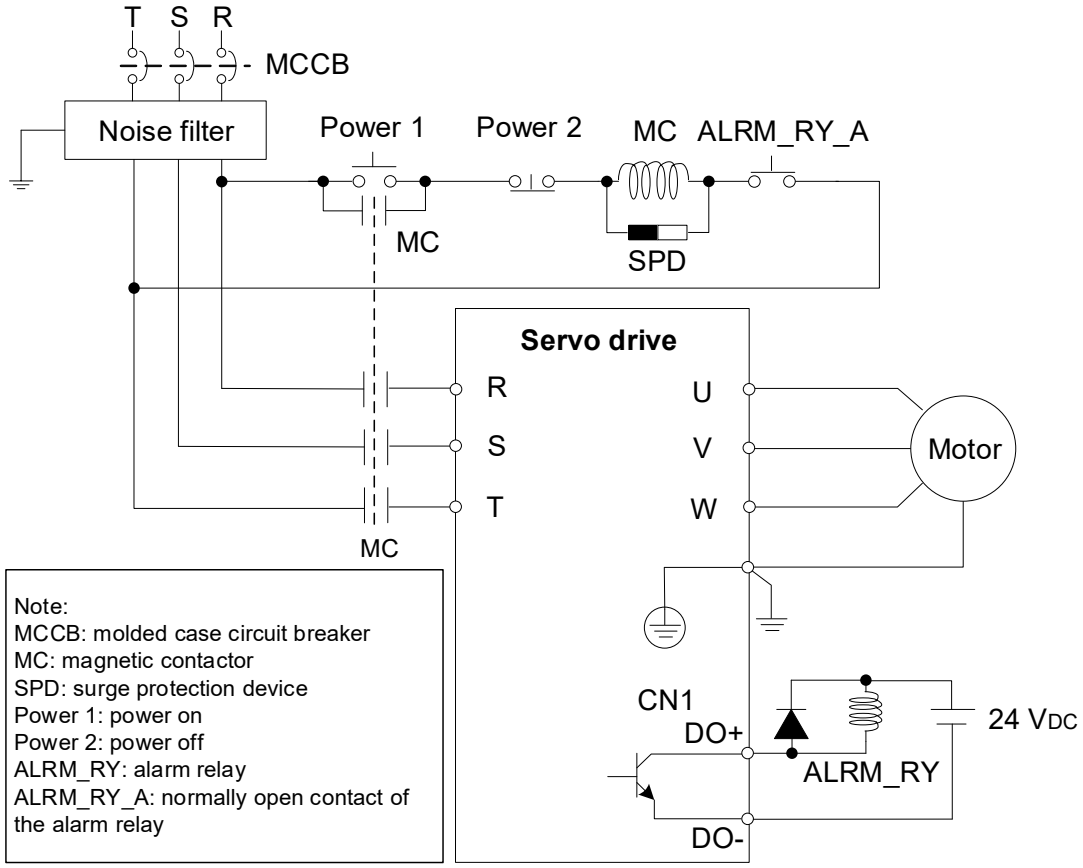

Note: perform wiring according to the actual DO parameter configurations of each model.

3

3.1.2.4 Wiring diagrams for the servo system

1 kW - 3 kW models

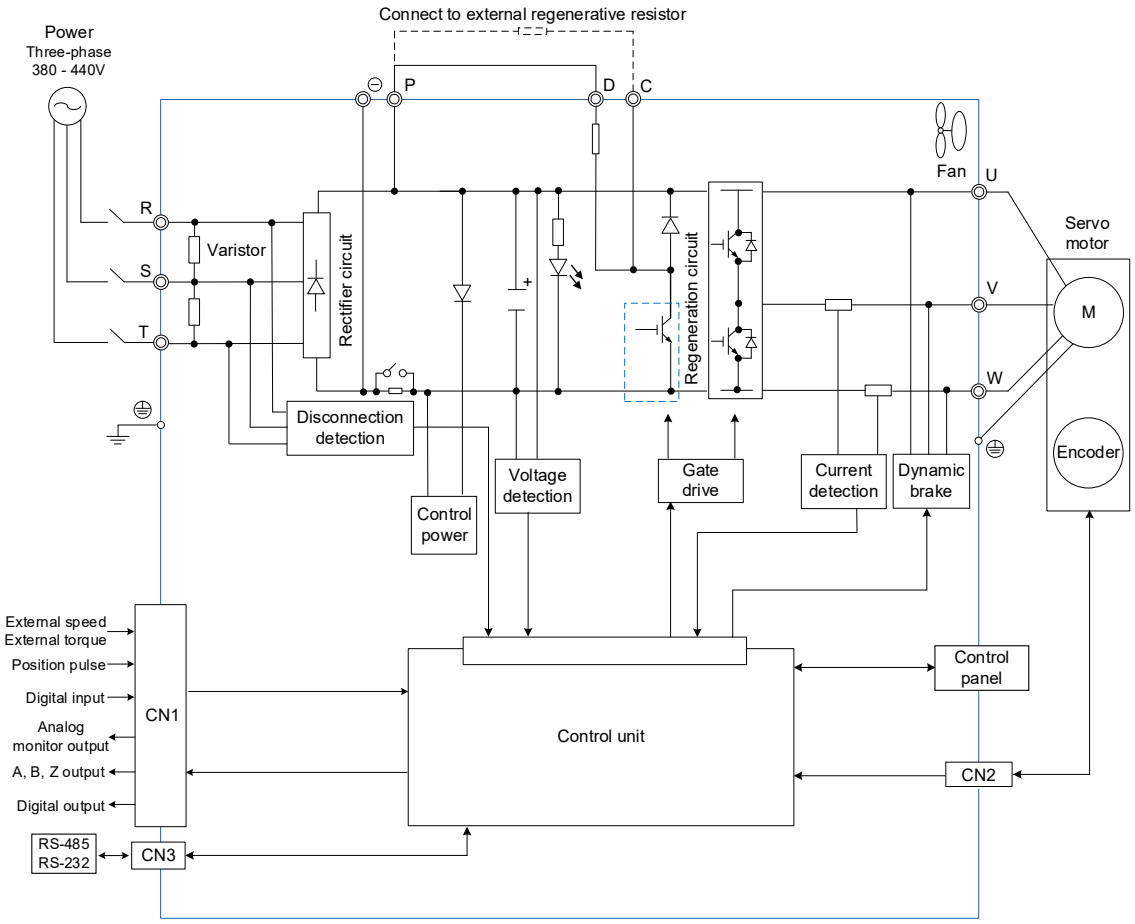

3.1.3 Power connector specifications

3.1.3.1 F40 - F80 motors – Power connectors

Connector type Model number	Applicable model Model number	UVW power connector - no brake
Standard ACS3-CAPW1000	ECM-E3 ECM-E3□-□□△△□□RS□ △△ = 04, 06, 08	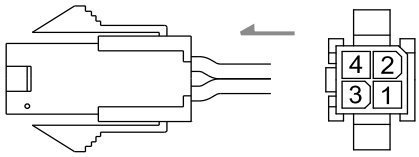
Bulkhead - cable exit direction towards motor shaft ACS3-AFPWSS00	ECM-E3 ECM-E3□-□□△△□□RB□ △△ = 04, 06, 08	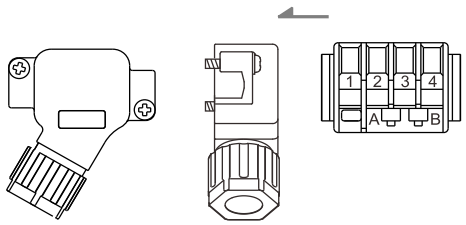
Bulkhead - cable exit direction towards encoder ACS3-ABPWSS00	ECM-E3 ECM-E3□-□□△△□□RB□ △△ = 04, 06, 08	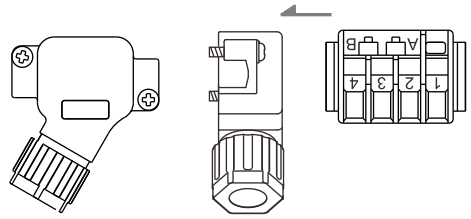

Pin assignment			
U (Red)	V (White)	W (Black)	FG (Yellow / Green)
1	2	3	4

Note: all bulkhead connectors are with brakes. Do not wire Pin A and Pin B when using the motors without brakes.

Connector type Model number	Applicable model Model number	UVW power connector - with brake
Standard ACS3-CAPW2000	ECM-E3 ECM-E3□-□□△△□□SS□ △△ = 04, 06, 08	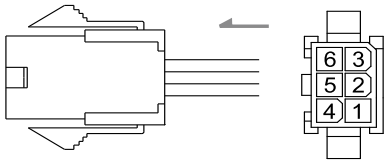
Bulkhead - cable exit direction towards motor shaft ACS3-AFPWSS00	ECM-E3 ECM-E3□-□□△△□□SB□ △△ = 04, 06, 08	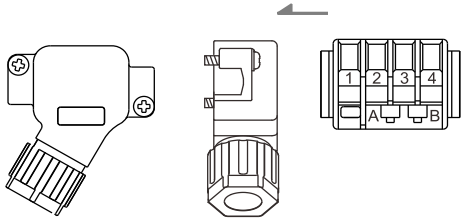
Bulkhead - cable exit direction towards encoder ACS3-ABPWSS00	ECM-E3 ECM-E3□-□□△△□□SB□ △△ = 04, 06, 08	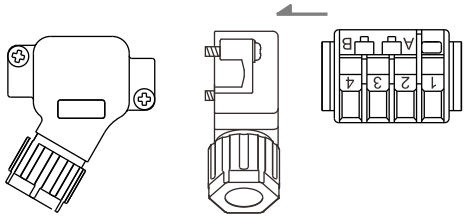

Pin assignment						
Connector type	U (Red)	V (White)	W (Black)	FG (Yellow / Green)	BRAKE1 (Brown)	BRAKE2 (Blue)
Standard	1	2	4	5	3	6
Bulkhead	1	2	3	4	A	B

Note: power supply for the brake is 24 V_{DC}; do not share the same power supply with other signals. The brake coil has no polarity; its pin symbols are BRAKE1 and BRAKE2.

3.1.3.2 F100 - F130 motors – Power connectors

Connector type Model number	Applicable model Model number	UVW power connector - no brake
Military - straight 3106A-18-10S ACS3-CAPWA000	ECM-E3 ECM-E3□-□□△△□□□S□ △△ = 10, 13	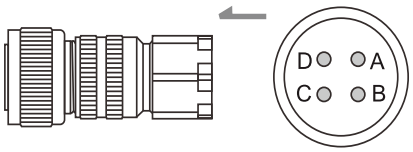
Military - right angle 3108A-18-10S ACS3-CRPWA000	ECM-E3 ECM-E3□-□□△△□□□S□ △△ = 10, 13	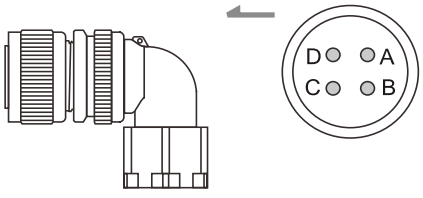

Pin assignment			
U (Red)	V (White)	W (Black)	FG (Yellow / Green)
A	B	C	D

Note: see Section 3.1.3.4 for the brake connectors.

3.1.3.3 F180 motors – Power connectors

Connector type Model number	Applicable model Model number	UVW power connector - no brake
Military - straight 3106A-22-22S ACS3-CAPWC000	ECM-E3 ECM-E3□-□□△△□□□S□ △△ = 18	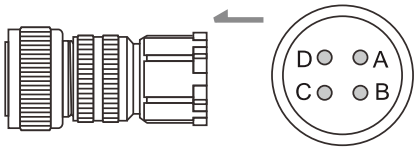
Military - right angle 3108A-22-22S ACS3-CRPWC000	ECM-E3 ECM-E3□-□□△△□□□S□ △△ = 18	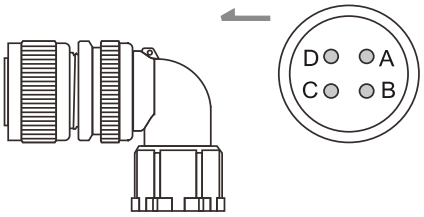

Pin assignment			
U (Red)	V (White)	W (Black)	FG (Yellow / Green)
A	B	C	D

Note: see Section 3.1.3.4 for the brake connectors.

3.1.3.4 F100 - F180 motors – Brake connectors

Connector type Model number	Applicable model Model number	Brake connector
Military - straight CMV1-SP2S [bayonet] ACS3-CABRA000	ECM-E3 ECM-E3□-□□△△□□S□□ △△ = 10, 13, 18	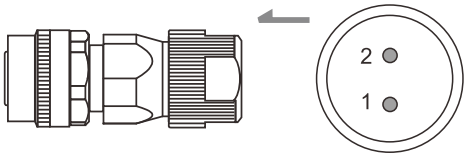
Military - straight [threaded, M17.5] ACS3-CABRM000	ECM-E3 ECM-E3□-□□△△□□S□□ △△ = 10, 13, 18	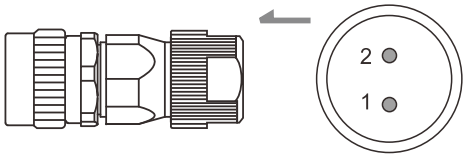
Military - right angle CMV1-AP2S [bayonet] ACS3-CRBRA000	ECM-E3 ECM-E3□-□□△△□□S□□ △△ = 10, 13, 18	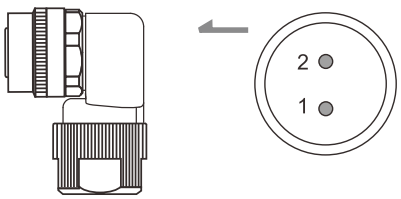
Military - right angle [threaded, M17.5] ACS3-CRBRM000	ECM-E3 ECM-E3□-□□△△□□S□□ △△ = 10, 13, 18	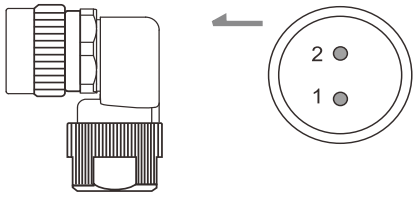

Pin assignment	
BRAKE1 (Red)	BRAKE2 (Black)
1	2

Note:

1. Power supply for the brake is 24 V_{DC}; do not share the same power supply with other signals. The brake coil has no polarity.
2. Motors with bayonet receptacles are not compatible with threaded military connectors. Refer to Section B.11 for details.

3.1.4 Encoder connector specifications

Select the corresponding encoder connector according to the motor frame size.

3

3.1.4.1 F40 - F80 motors – Encoder connectors

Standard connector

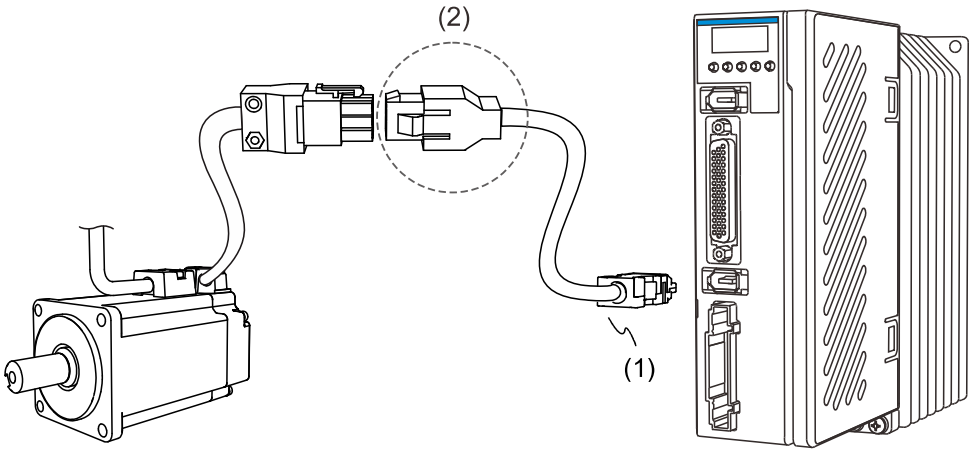

(1) CN2 connector; (2) Standard connector

Connector type Model number	Applicable model Model number	Encoder connector
Standard ACS3-CAEN0000	ECM-E3 ECM-E3□-□□△△□□□S□ △△ = 04, 06, 08	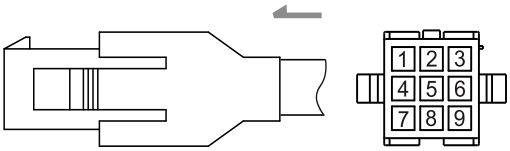

Note:
1. See Section 3.3 for the pin assignment of the encoder connectors.
2. We recommend using the connector with tin-plated terminals since the connector of the encoder cable from the servo motor side is also tin-plated.

.

Bulkhead connector

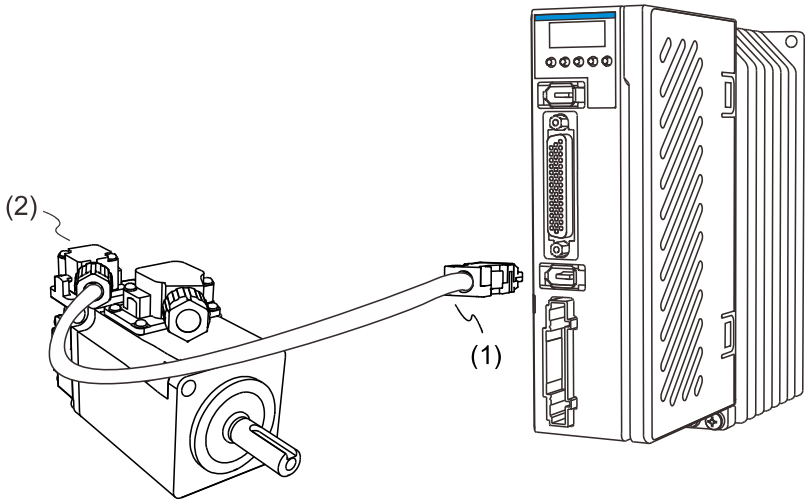

(1) CN2 connector；(2) Bulkhead connector (cable exit direction towards motor shaft)

Connector type Model type	Applicable model Model number	Encoder connector
Bulkhead - cable exit direction towards motor shaft ACS3-AFEASA00	ECM-E3 ECM-E3□-□□△△□□□B□ △△ = 04, 06, 08	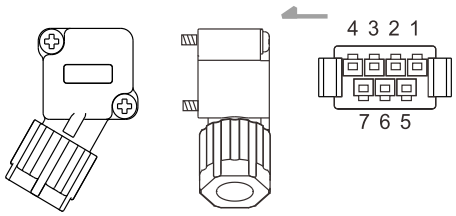
Bulkhead - cable exit direction towards encoder ACS3-AFEASA00	ECM-E3 ECM-E3□-□□△△□□□B□ △△ = 04, 06, 08	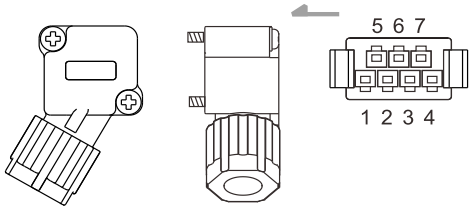

Note: see Section 3.3 for the pin assignment of the encoder connectors.

3

3.1.4.2 F100 - F180 motors – Encoder connectors

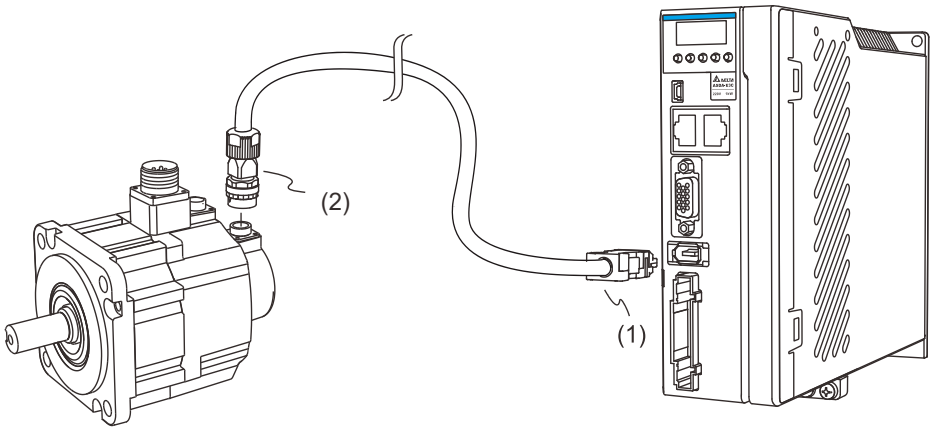

(1) CN2 connector; (2) Military connector

Connector type Model number	Applicable model Model number	Encoder connector
Military - straight CMV1-SP10S [bayonet] ACS3-CAENA000	ECM-E3 ECM-E3□-□□△△□□□□□ △△ = 10, 13, 18	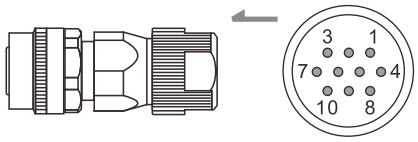
Military - straight [threaded, M17.5] ACS3-CAENM000	ECM-E3 ECM-E3□-□□△△□□□□□ △△ = 10, 13, 18	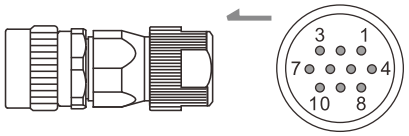
Military - right angle CMV1-AP10S [bayonet] ACS3-CRENA000	ECM-E3 ECM-E3□-□□△△□□□□□ △△ = 10, 13, 18	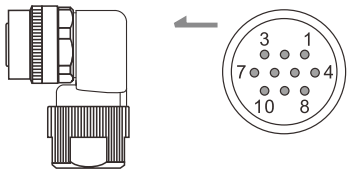
Military - right angle [threaded, M17.5] ACS3-CRENM000	ECM-E3 ECM-E3□-□□△△□□□□□ △△ = 10, 13, 18	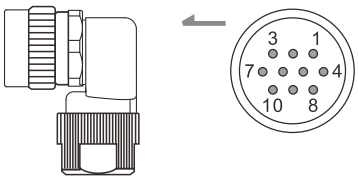

Note:
1. See Section 3.3 for the pin assignment of the encoder connectors.
2. Motors with bayonet receptacles are not compatible with threaded military connectors. Refer to Section B.11 for details.

3.1.5 Wire selection

3.1.5.1 Wire and terminal specifications

Use wire ferrules, and the suggested brand is K.S. Terminals Inc. The following table is the suggested wire specifications.

1. The shield should be connected to the ground terminal ⏚.
2. When wiring, use the wires suggested in this section to avoid danger.
3. Do not use bare wires for wiring, or the loose wires may cause accidents.

Servo drive model	L1, L2		U, V, W		P, D, C, ⊖	
	Wire spec.	Wire ferrule	Wire spec.	Wire ferrule	Wire spec.	Wire ferrule
ASD-E3C-0421	20 AWG 0.5 mm^2	E0508	18 AWG 0.8 mm^2	E1008	14 AWG 2.1 mm^2	E2508
ASD-E3C-0721	16 AWG 1.3 mm^2	E1508	18 AWG 0.8 mm^2	E1008	14 AWG 2.1 mm^2	E2508
ASD-E3C-1021	14 AWG 2.1 mm^2	E2508	14 AWG 2.1 mm^2	E2508	14 AWG 2.1 mm^2	E2508
ASD-E3C-1521	14 AWG 2.1 mm^2	E2508	14 AWG 2.1 mm^2	E2508	14 AWG 2.1 mm^2	E2508

Servo drive model	R, S, T		U, V, W		P, D, C, ⊖	
	Wire spec.	Wire ferrule	Wire spec.	Wire ferrule	Wire spec.	Wire ferrule
ASD-E3C-1043	14 AWG 2.1 mm^2	E2508	14 AWG 2.1 mm^2	E2508	14 AWG 2.1 mm^2	E2508
ASD-E3C-1543	14 AWG 2.1 mm^2	E2508	14 AWG 2.1 mm^2	E2508	14 AWG 2.1 mm^2	E2508
ASD-E3C-2043	14 AWG 2.1 mm^2	E2508	14 AWG 2.1 mm^2	E2508	14 AWG 2.1 mm^2	E2508
ASD-E3C-3043	14 AWG 2.1 mm^2	E2508	14 AWG 2.1 mm^2	E2508	14 AWG 2.1 mm^2	E2508

3.1.5.2 Crimping the wire ferrules

- Do not use bare wires for wiring, or the loose wires may cause accidents.
- Use a crimping tool to properly crimp the ferrules and wires.

Crimping the wire ferrules

Use a ferrule with the barrel length of **8 - 9 mm (0.31 - 0.35 inches)** and the wires of corresponding specifications for the drives. If the barrel length is shorter than 8 mm, the wire may fall off and cause danger.

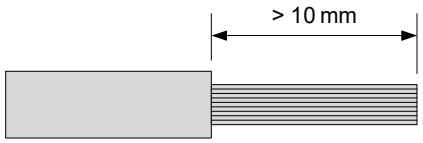

Step 1: strip the wire insulation to expose the conductor for more than 10 mm (0.39 inches).

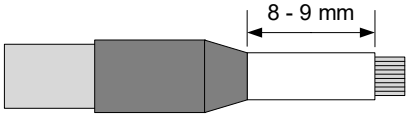

Step 2: insert the wire into the ferrule.

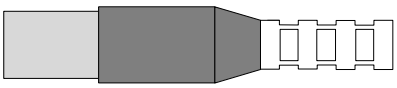

Step 3: use a ferrule crimping tool to crimp the barrel. Cut off the exposed conductor; the remaining length of the exposed part should be shorter than 0.5 mm (0.02 inches).

Wire specifications for the attached terminals of Delta connectors

The following table shows the Delta connectors with terminals attached and the applicable wire specifications. Refer to the actual product specification when wiring.

Connector type	Connector model	Applicable wire spec.
Standard	ACS3-CAPW1000	24 - 18 AWG (0.2 mm² - 0.8 mm²)
	ACS3-CAPW2000	24 - 18 AWG (0.2 mm² - 0.8 mm²)
	ACS3-CAEN0000	26 - 22 AWG (0.13 mm² - 0.3 mm²)
Bulkhead - cable exit direction towards motor shaft	ACS3-AFPWSS00	UVW: 20 - 18 AWG (0.5 mm² - 0.8 mm²) Brake: 26 - 22 AWG (0.13 mm² - 0.3 mm²)
Bulkhead - cable exit direction towards encoder	ACS3-ABPWSS00	
Bulkhead - cable exit direction towards motor shaft / towards encoder	ACS3-AFEASA00	26 - 22 AWG (0.13 mm² - 0.3 mm²)

3.1.5.3 Encoder cable specifications

Item	Standard cable	Flexible cable
Model number	ACS3-CAEN01XX ACS3-CAEA01XX ACS3-CAENA1XX ACS3-CAEAA1XX ACS3-CRENA1XX ACS3-CREAA1XX ACS3-CAENM1XX ACS3-CAEAM1XX ACS3-CRENM1XX ACS3-CREAM1XX	ACS3-CAEF01XX ACS3-CAEB01XX ACS3-CAEFA1XX ACS3-CAEBA1XX ACS3-CREFA1XX ACS3-CREBA1XX ACS3-CAEFM1XX ACS3-CAEBM1XX ACS3-CREFM1XX ACS3-CREBM1XX
Cable specification	UL2464 (Temp. rating: 80°C / 176°F)	UL2464 (Temp. rating: 80°C / 176°F)
DC+5V, GND	AWG#22-2C (0.3 mm²) Outer diameter of insulated wire: Φ1.3 mm	AWG#22-2C (0.3 mm²) Outer diameter of insulated wire: Φ1.3 mm
T+, T-	AWG#24-2P (0.2 mm²) Outer diameter of insulated wire: Φ1.1 mm	AWG#24-2P (0.2 mm²) Outer diameter of insulated wire: Φ1.1 mm
Cable outer diameter	Φ7 mm	
Max. allowable wiring length	20 m	
Standard length provided by Delta	L = 3 m, 5 m, 10 m, 20 m	

Note:
1. Use a shielded twisted-pair cable to reduce the noise interference.
2. The shield should be connected to the ground terminal ⏚.
3. When wiring, use the wires suggested in this section to avoid danger.

Item	Standard cable	Flexible cable
Model number	ACS3-AFEASIXX ACS3-ABEASIXX ACS3-AFEASAXX ACS3-ABEASAXX	ACS3-AFERSIXX ACS3-ABERSIXX ACS3-AFERSAXX ACS3-ABERSAXX
Cable specification	UL20276 (Temp. rating: 80°C / 176°F)	UL20276 (Temp. rating: 80°C / 176°F)
DC+5V, GND	AWG#22-2C (0.3 mm²) Outer diameter of insulated wire: Φ1.3 mm	AWG#22-2C (0.3 mm²) Outer diameter of insulated wire: Φ1.3 mm
T+, T-	AWG#26-2P (0.13 mm²) Outer diameter of insulated wire: Φ1.1 mm	AWG#26-2P (0.13 mm²) Outer diameter of insulated wire: Φ1.1 mm
Cable outer diameter	Φ5.8 - 6.2 mm	
Max. allowable wiring length	20 m	
Standard length provided by Delta	L = 3 m, 5 m, 10 m, 20 m	

Note:
1. Use a shielded twisted-pair cable to reduce the noise interference.
2. The shield should be connected to the ground terminal ⏚.
3. When wiring, use the wires suggested in this section to avoid danger.
4. Wire specification of the encoder adapter cables is the same as that of the encoder cables. For the cable length, refer to Section B.6.

3.1.5.4 Power cable specifications

F40 - F80 motors

Item	Standard cable	Flexible cable
Model number	ACS3-CAPW11XX	ACS3-CAPF11XX
Cable specification	UL2517 (Temp. rating: 105°C / 221°F)	UL2517 (Temp. rating: 105°C / 221°F)
UVW wire	AWG#18-4C (0.8 mm²) Outer diameter of insulated wire: Φ2.1 mm Voltage rating: 300 V_{AC}	AWG#18-4C (0.8 mm²) Outer diameter of insulated wire: Φ2.1 mm Voltage rating: 300 V_{AC}
Brake wire	AWG#22-2C (0.3 mm²) Outer diameter of insulated wire: Φ1.6 mm Voltage rating: 300 V_{AC}	AWG#22-2C (0.3 mm²) Outer diameter of insulated wire: Φ1.6 mm Voltage rating: 300 V_{AC}
Cable outer diameter	Power cable without brake: Φ7.7 mm; power cable with brake: Φ8.6 mm	
Max. allowable wiring length	20 m	
Standard length provided by Delta	L = 3 m, 5 m, 10 m, 20 m	

Item	Standard cable	Flexible cable
Model number	ACS3-AFPWSRXX ACS3-AFPWSSXX ACS3-ABPWSRXX ACS3-ABPWSSXX	ACS3-AFPRSRXX ACS3-AFPRSSXX ACS3-ABPRSRXX ACS3-ABPRSSXX
Cable specification	UL2517 (Temp. rating: 105°C / 221°F)	UL2517 (Temp. rating: 105°C / 221°F)
UVW wire	AWG#20-4C (0.5 mm²) Outer diameter of insulated wire: Φ1.55 mm Voltage rating: 300 V_{AC}	AWG#20-4C (0.5 mm²) Outer diameter of insulated wire: Φ1.55 mm Voltage rating: 300 V_{AC}
Brake wire	AWG#24-2C (0.2 mm²) Outer diameter of insulated wire: Φ1.12 mm Voltage rating: 300 V_{AC}	AWG#24-2C (0.2 mm²) Outer diameter of insulated wire: Φ1.12 mm Voltage rating: 300 V_{AC}
Cable outer diameter	Φ6.0 - 6.8 mm	
Max. allowable wiring length	20 m	
Standard length provided by Delta	L = 3 m, 5 m, 10 m, 20 m	

Note: wire specification of the power adapter cables is the same as that of the power cables. For the cable length, refer to Section B.3.

Item	Standard cable	Flexible cable
Model number	ACS3-CAPW21XX ACS3-CAPW31XX	ACS3-CAPF21XX ACS3-CAPF31XX
Cable specification	UL2586 (Temp. rating: 105°C / 221°F)	UL2586 (Temp. rating: 105°C / 221°F)
UVW wire	AWG#18-4C (0.8 mm²) Outer diameter of insulated wire: Φ2.1 mm Voltage rating: 600 V_{AC}	AWG#18-4C (0.8 mm²) Outer diameter of insulated wire: Φ2.1 mm Voltage rating: 600 V_{AC}
Brake wire	AWG#22-2C (0.3 mm²) Outer diameter of insulated wire: Φ1.6 mm Voltage rating: 600 V_{AC}	AWG#22-2C (0.3 mm²) Outer diameter of insulated wire: Φ1.6 mm Voltage rating: 600 V_{AC}
Cable outer diameter	Power cable without brake: Φ7.7 mm; power cable with brake: Φ8.6 mm	
Max. allowable wiring length	20 m	
Standard length provided by Delta	L = 3 m, 5 m, 10 m, 20 m	

Item	Standard cable	Flexible cable
Model number	ACS3-AFPWSAXX ACS3-AFPWSBXX ACS3-ABPWSAXX ACS3-ABPWSBXX	ACS3-AFPRSAXX ACS3-AFPRSBXX ACS3-ABPRSAXX ACS3-ABPRSBXX
Cable specification	UL2586 (Temp. rating: 105°C / 221°F)	UL2586 (Temp. rating: 105°C / 221°F)
UVW wire	AWG#20-4C (0.5 mm²) Outer diameter of insulated wire: Φ1.7 mm Voltage rating: 600 V_{AC}	AWG#20-4C (0.5 mm²) Outer diameter of insulated wire: Φ1.7 mm Voltage rating: 600 V_{AC}
Brake wire	AWG#24-2C (0.2 mm²) Outer diameter of insulated wire: Φ1.35 mm Voltage rating: 600 V_{AC}	AWG#24-2C (0.2 mm²) Outer diameter of insulated wire: Φ1.35 mm Voltage rating: 600 V_{AC}
Cable outer diameter	Φ6.0 - 6.8 mm	
Max. allowable wiring length	20 m	
Standard length provided by Delta	L = 3 m, 5 m, 10 m, 20 m	

Note:
1. Apart from these specifications, refer to Section 2.6.1 for the motor power cable selection and installation precautions.
2. Wire specification of the power adapter cables is the same as that of the power cables. For the cable length, refer to Section B.3.

F100 - F130 motors

Item		Standard cable	Flexible cable
Power cable	Model number	ACS3-CAPWA3XX ACS3-CRPWA3XX	ACS3-CAPFA3XX ACS3-CRPFA3XX
	Specification	UL2586 (Temp. rating: 105°C / 221°F) AWG#14-4C (2.1 mm²) Outer diameter of insulated wire: Φ2.8 mm Cable outer diameter: Φ9.5 mm Voltage rating: 600 V_{AC}	UL2586 (Temp. rating: 105°C / 221°F) AWG#14-4C (2.1 mm²) Outer diameter of insulated wire: Φ2.8 mm Cable outer diameter: Φ9.5 mm Voltage rating: 600 V_{AC}
Brake cable	Model number	ACS3-CABRA1XX ACS3-CRBRA1XX ACS3-CABRM1XX ACS3-CRBRM1XX	ACS3-CABFA1XX ACS3-CRBFA1XX ACS3-CABFM1XX ACS3-CRBFM1XX
	Specification	UL2517 (Temp. rating: 105°C / 221°F) AWG#20-2C (0.5 mm²) Outer diameter of insulated wire: Φ1.8 mm Cable outer diameter: Φ5.5 mm Voltage rating: 300 V_{AC}	UL2517 (Temp. rating: 105°C / 221°F) AWG#20-2C (0.5 mm²) Outer diameter of insulated wire: Φ1.8 mm Cable outer diameter: Φ5.5 mm Voltage rating: 300 V_{AC}
Max. allowable wiring length		20 m	
Standard length provided by Delta		L = 3 m, 5 m, 10 m, 20 m	

F180 motors

Item		Standard cable	Flexible cable
Power cable	Model number	ACS3-CAPWC3XX ACS3-CRPWC3XX	ACS3-CAPFC3XX ACS3-CRPFC3XX
	Specification	UL2586 (Temp. rating: 105°C / 221°F) AWG#14-4C (2.1 mm²) Outer diameter of insulated wire: Φ2.8 mm Cable outer diameter: Φ9.5 mm Voltage rating: 600 V_{AC}	UL2586 (Temp. rating: 105°C / 221°F) AWG#14-4C (2.1 mm²) Outer diameter of insulated wire: Φ2.8 mm Cable outer diameter: Φ9.5 mm Voltage rating: 600 V_{AC}
Brake cable	Model number	ACS3-CABRA1XX ACS3-CRBRA1XX ACS3-CABRM1XX ACS3-CRBRM1XX	ACS3-CABFA1XX ACS3-CRBFA1XX ACS3-CABFM1XX ACS3-CRBFM1XX
	Specification	UL2517 (Temp. rating: 105°C / 221°F) AWG#20-2C (0.5 mm²) Outer diameter of insulated wire: Φ1.8 mm Cable outer diameter: Φ5.5 mm Voltage rating: 300 V_{AC}	UL2517 (Temp. rating: 105°C / 221°F) AWG#20-2C (0.5 mm²) Outer diameter of insulated wire: Φ1.8 mm Cable outer diameter: Φ5.5 mm Voltage rating: 300 V_{AC}
Max. allowable wiring length		20 m	
Standard length provided by Delta		L = 3 m, 5 m, 10 m, 20 m	

3.1.5.5 Flexible cable specifications

Delta provides two types of power and encoder cables: standard cables and flexible cables. When connecting to a moving machine, use a flexible cable. Refer to the following table for flexible cable specifications.

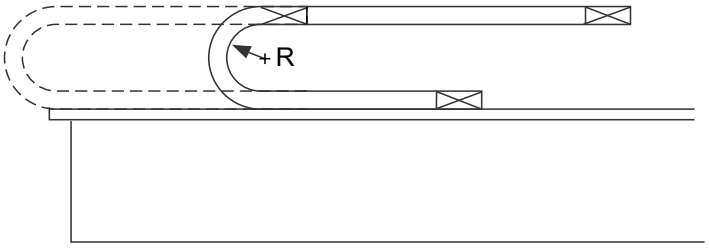

R = bend radius of the cable

Item	Specification
Bend radius	10 times of the cable outer diameter
Number of bending times	10 million times*1
Speed	3 m/s
Acceleration	15 m/s^2

Note:
1. Bending the cable into a curve and then straightening it is considered as one time.
2. For precautions relevant to the use of cables, refer to Section 2.9.

3.1.6 Waterproof connector wiring instructions

3.1.6.1 F40 - F80 motors – Power / Encoder / Brake connectors

3

The example here uses the **bulkhead connector - cable exit direction towards motor shaft**:

Bulkhead connector		
Step 1	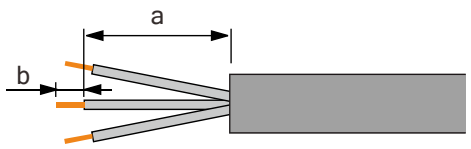	Strip the cable; the exposed wire length (a) should be 15 mm (0.59 inches) and the conductor length (b) should be as follows: ■ For encoder cables / brake cables: 1.5 - 1.8 mm (0.059 - 0.071 inches) ■ For power cables of bulkhead connectors (cable exit direction towards motor shaft): 2 - 2.2 mm (0.079 - 0.087 inches) ■ For power cables of bulkhead connectors (cable exit direction towards encoder): 1.8 - 2 mm (0.071 - 0.079 inches)
Step 2	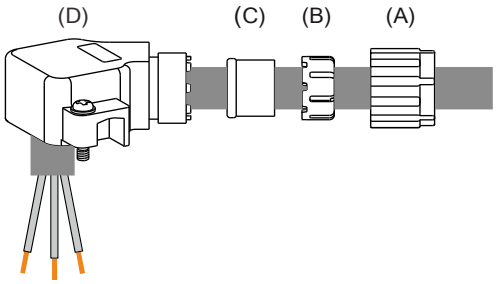	Place the (A) sealing nut, (B) compression ring, (C) rubber ring (with the bulge side towards the housing), and (D) housing on the cable in sequence. Important: use the rubber ring corresponding to the cable in order to meet the IP67 standard.
Step 3	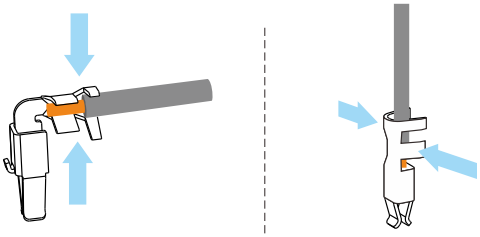	Crimp the terminal.
Step 4	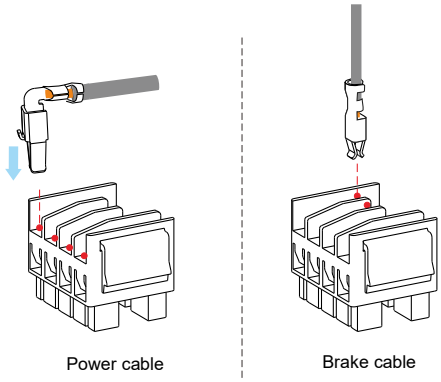	Plug the terminal into the connector. ■ Refer to Section 3.1.3 for pin assignment of power connectors. ■ Refer to Section 3.3 for pin assignment of encoder connectors.

Bulkhead connector		
Step 5	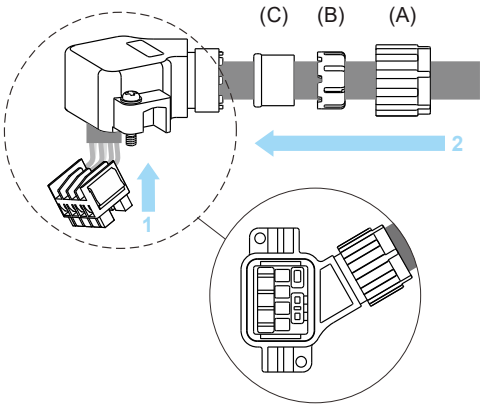	Put the connector in the housing, and secure the (C) rubber ring, (B) compression ring, and (A) sealing nut to the housing in sequence. Use a wrench to lock the sealing nut to the housing to complete the wiring.

Precautions:

Cable exit direction towards motor shaft	Cable exit direction towards encoder	
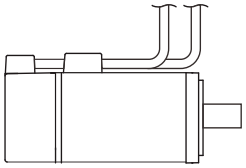	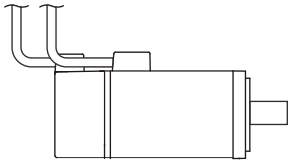	Illustrations for the cable exit direction.
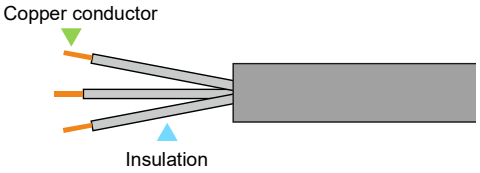 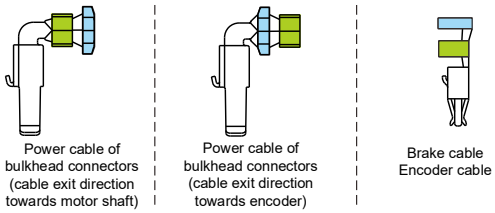		The green highlighted area on the terminal is where you crimp the copper conductor. The blue highlighted area on the terminal is where you crimp the wire insulation. Refer to Section 3.1.5.2 for the wire specifications of terminals.
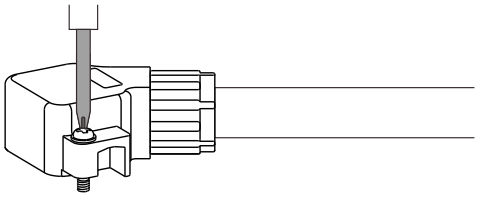		It is advisable to tighten the connector to the motor at the torque of 0.15 ± 0.015 N·m. Use the M2 screw for tightening.

3.1.6.2 F100 - F180 motors – Power connectors

Military connector		
Step 1	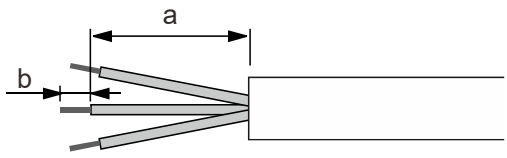	Strip the cable; the exposed wire length (a) should be 23 - 27 mm (0.9” - 1.06”) for straight connectors and 28 - 32 mm (1.1” - 1.26”) for right angle connectors, and the tinned conductor length (b) should be 3 - 5 mm (0.12” - 0.2”).
Step 2	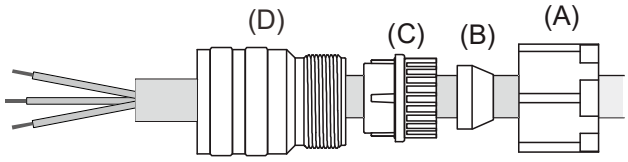	Place the (A) sealing nut, (B) rubber ring, (C) black compression ring, and (D) straight or right angle connector on the cable in sequence. Important: use the rubber ring corresponding to the cable in order to meet the IP67 standard.
Step 3	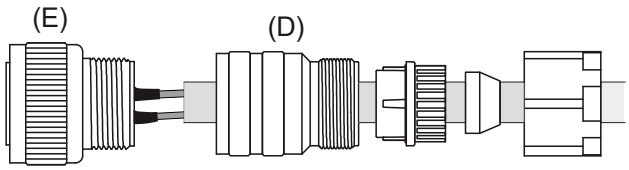	Refer to Section 3.1.3 for pin assignment of power connectors. Important: it is suggested that you use 20 mm (0.79”) heat shrink for straight connectors, and 25 mm (0.98”) heat shrink for right angle connectors.
Step 4	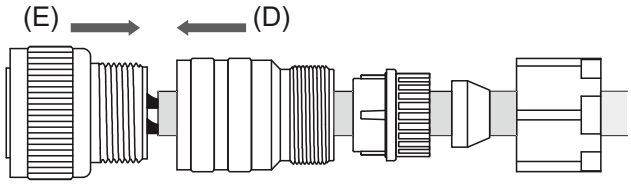	Tighten (D) and (E) with adequate torque. For the torque value, refer to Section 3.1.6.4.
Step 5	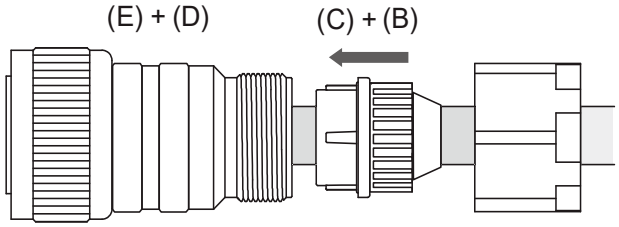	Place (B) in (C), and then place (C) + (B) in (D).
Step 6	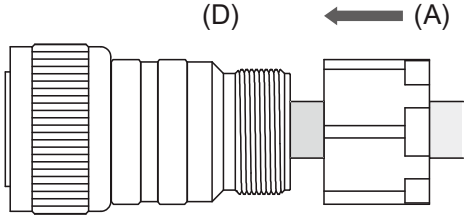	Tighten (A) and (D) at the torque of 10 N·m.

3.1.6.3 F100 - F180 motors – Encoder / Brake connectors

The example here uses the **encoder connector**. For brake connectors, disregard the descriptions about metal shield.

Encoder / Brake connector		
Step 1	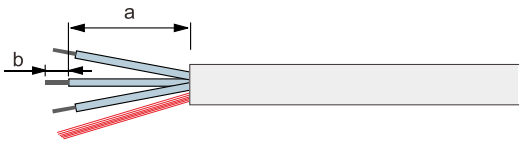	Strip the cable and expose the wires covered by the metal shield. The exposed wire length (a) should be 12 mm (0.47”) for straight connectors and 17 mm (0.67”) for right angle connectors, and the tinned conductor length (b) should be 2 mm (0.08”).
Step 2	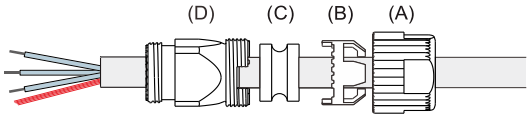	Place the (A) sealing nut, (B) compression ring, (C) rubber ring, and (D) straight or right angle connector on the cable in sequence. Important: use the rubber ring corresponding to the cable in order to meet the IP67 standard.
Step 3	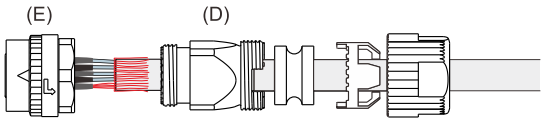	■ The pins of brake connectors have no polarity. ■ Refer to Section 3.3 for pin assignment of encoder connectors. Separate the metal shield into two strands. Solder one strand of the metal shield to the solder cup, and then fold back the other strand. Important: it is suggested that you use an 8 mm (0.31”) heat shrink.
Step 4	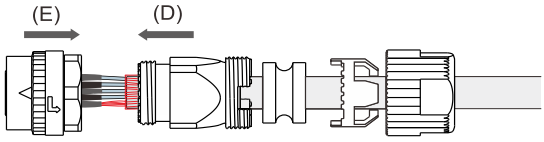	Tighten (D) and (E) with adequate torque. For the torque value, refer to Section 3.1.6.4.
Step 5	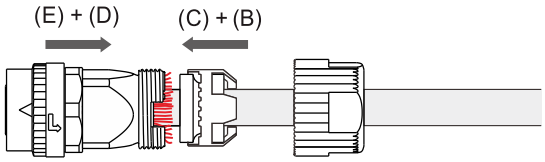	Place (C) in (B), and then place (C) + (B) in (D).
Step 6	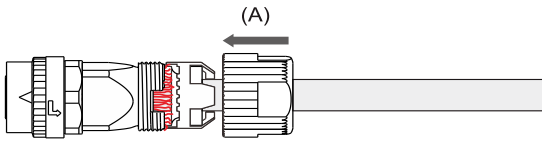	Tighten (A) and (D) at the torque of 2.1 N·m to join the folded metal shield and the metal case together. This increases the contact area of the ground terminal and reduces the interference.

3.1.6.4 Waterproof connector installation and wiring specifications

When mating, ensure the connector is fully locked and the diameter of the wire matches that of the rubber ring. If you choose a wire of smaller diameter and a rubber ring of larger diameter, the combination does not meet the IP67 standard. When selecting the wires, refer to Section 3.1.5.

Motor frame size	Connector type	Connector model	Rubber ring diameter (mm)	Torque for tightening the connector
F40 - F80	Bulkhead - cable exit direction towards motor shaft	ACS3-AFPWSS00	Φ6.0 - Φ6.8	0.4 - 0.6 N·m
	Bulkhead - cable exit direction towards encoder	ACS3-ABPWSS00	Φ6.0 - Φ6.8	0.4 - 0.6 N·m
	Bulkhead - cable exit direction towards motor shaft / towards encoder	ACS3-AFEASA00	Φ5.8 - Φ6.2	0.4 - 0.6 N·m
F100 - F130	Military - straight	ACS3-CAPWA000	Two sets of rubber rings attached Φ9 - Φ10 and Φ11 - Φ12	8 - 9 N·m (Φ9 - Φ10)
	Military - right angle	ACS3-CRPWA000		9 - 10 N·m (Φ11 - Φ12)
F180	Military - straight 3106A-22-22S	ACS3-CAPWC000	Two sets of rubber rings attached Φ11 - Φ12 and Φ15 - Φ16	7.5 - 8.5 N·m (Φ11 - Φ12)
	Military - right angle 3108A-22-22S	ACS3-CRPWC000		7.5 N·m (Φ15 - Φ16)
F100 - F180	Military - straight CMV1-SP2S [bayonet]	ACS3-CABRA000	Φ5.5 - Φ7.5	4 - 5 N·m
	Military - right angle CMV1-AP2S [bayonet]	ACS3-CRBRA000		
	Military - straight [threaded, M17.5]	ACS3-CABRM000	Φ5.5 - Φ7.5	4 - 5 N·m
	Military - right angle [threaded, M17.5]	ACS3-CRBRM000	Φ5.5 - Φ7.5	4 - 5 N·m
	Military - straight CMV1-SP10S [bayonet]	ACS3-CAENA000	Φ5.5 - Φ7.5	4 - 5 N·m
	Military - right angle CMV1-AP10S [bayonet]	ACS3-CRENA000		
	Military - straight [threaded, M17.5]	ACS3-CAENM000	Φ5.5 - Φ7.5	4 - 5 N·m
	Military - right angle [threaded, M17.5]	ACS3-CRENM000	Φ5.5 - Φ7.5	4 - 5 N·m

3.2 Wiring for the CN1 I/O connector

3.2.1 CN1 I/O connector pin assignment

The CN1 I/O connector includes 9 inputs and 6 outputs for you to define their functions. In addition, differential output signals (OA, /OA, OB, /OB, OZ, and /OZ) for the encoder are provided. Analog torque command input, analog speed / position command input, and pulse position command input are also available. The pin assignments are shown as follows.

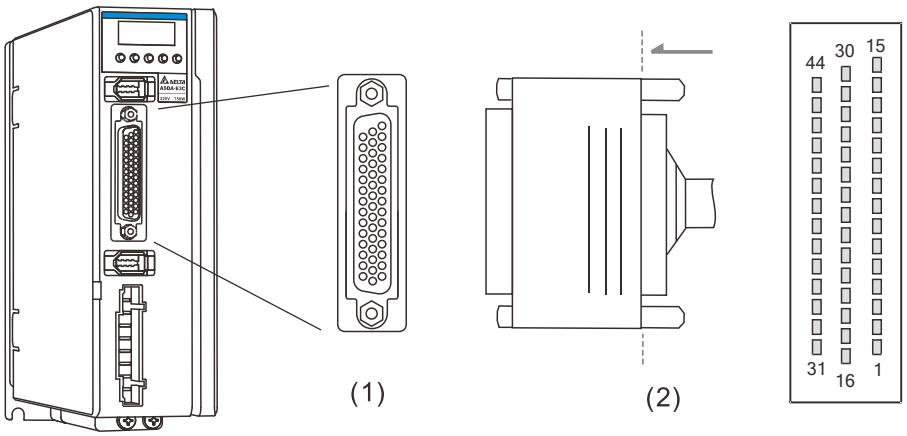

(1) CN1 connector (female); (2) CN1 connector (male)

Note: the tightening torque of the CN1 connector is 2 to 2.5 kgf-cm (1.7 to 2.2 lbf-in).

Pin assignment:

Pin	Signal	Description	Pin	Signal	Description
1	DO4+	Digital output	23	/OB	Differential output for encoder /B pulse
2	DO3-	Digital output	24	/OZ	Differential output for encoder /Z pulse
3	DO3+	Digital output	25	OB	Differential output for encoder B pulse
4	DO2-	Digital output	26	DO4-	Digital output
5	DO2+	Digital output	27	DO5-	Digital output
6	DO1-	Digital output	28	DO5+	Digital output
7	DO1+	Digital output	29	GND	Ground for analog / differential output signal
8	DI4-	Digital input	30	DI8-	Digital input
9	DI1-	Digital input	31	DI7-	Digital input
10	DI2-	Digital input	32	DI6-	Digital input
11	COM+	Power input (24V ± 10%)	33	DI5-	Digital input
12	DI9-	Digital input	34	DI3-	Digital input
13	OZ	Differential output for encoder Z pulse	35	PULL HI_S (Sign)	External power (24V ± 10%) for Sign input
14	MON2	Analog monitor output 2	36	PULL HI_P (Pulse)	External power (24V ± 10%) for Pulse input
15	DO6-	Digital output	37	SIGN-	Position sign (-)
16	DO6+	Digital output	38	NC	-
17	MON1	Analog monitor output 1	39	SIGN+	Position sign (+)
18	T_REF	Analog torque command input	40	GND	Ground for analog / differential output signal
19	GND	Ground for analog / differential output signal	41	PULSE-	Position pulse (-)
20	V_REF	Analog speed / position command input (+)	42	NC	-
21	OA	Differential output for encoder A pulse	43	PULSE+	Position pulse (+)
22	/OA	Differential output for encoder /A pulse	44	OCZ	Open-collector output for encoder Z pulse

Note:

1. NC represents “No connection”, which is for internal use only. Do not connect to NC, or it may damage the servo drive.
2. **When the source of the pulse input is open collector NPN or PNP type equipment, you must connect the external power (24V ± 10%) to the PULL HI pins.**
   - **Do not connect the 24V power to the SIGN+ and SIGN- pins at the same time, or the circuit elements will be damaged.**
   - **Do not connect the 24V power to the PULSE+ and PULSE- pins at the same time, or the circuit elements will be damaged.**

3.2.2 CN1 I/O connector signal description

The following table details the signals listed in the previous section.

Signal		Pin No.	Description	Wiring method (refer to Section 3.2.3)
Analog command (input)	V_REF	20	(1) When the motor speed command is set to -10V to +10V, it means the rotation speed is -3000 rpm to +3000 rpm (default). You can set the parameter to change the corresponding range. (2) When the motor position command is set to -10V to +10V, it means the range of the rotation position is -3 to +3 cycles (default).	C1
	T_REF	18	When the motor torque command is set to -10V to +10V, it means the rated torque is -100% to +100%.	
Analog monitor (output)	MON1 MON2	17 14	The operation status of motor, such as speed and current, can be displayed in analog voltage. This servo drive provides 2 output channels. You can select the data to be monitored with P0.003. This signal is based on the power ground (GND).	C2
Position pulse (input)	PULSE+ PULSE-	43 41	Position pulses can be sent by line driver (single-phase max. pulse input frequency: 4 MHz) or open collector (single-phase max. pulse input frequency: 200 kHz). Three command types (CW/CCW pulse, pulse train + sign, and A phase + B phase) can be selected with P1.000.	C3 / C4
	SIGN+ SIGN-	39 37		
	PULL HI_P PULL HI_S	36 35	If using open collector type when sending position pulses, ensure to use an external power supply (24V ± 10%) for pull high.	
Position pulse (output)	OA /OA	21 22	Differential output (line driver) for the encoder A, B, and Z signals.	C9 / C10
	OB /OB	25 23		
	OZ /OZ	13 24		
	OCZ	44	Open-collector output for the encoder Z signal.	C11
Power	COM+	11	NPN: COM+ is the positive terminal of the voltage source for DI and requires an external power supply (24V ± 10%). PNP: COM+ is the negative terminal of the voltage source for DI and requires an external power supply (24V ± 10%).	-
	GND	19, 29, 40	The ground for analog signals and differential output signals.	
Others	NC	38, 42	No connection. These pins are for internal use only. Do not connect to NC, or it may damage the servo drive.	

There are various control modes available (refer to Section 6.1) and the DI/DO signal configuration differs for each mode. This servo drive provides user-defined DI/DO signals for you to set the functions based on the application requirements. Refer to Chapter 8 for Table 8.1 Digital input (DI) descriptions and Table 8.2 Digital output (DO) descriptions. The default DI/DO signal configuration for each control mode meets the requirements for general applications. To reset the DI/DO signals to the default of each mode, set P1.001.U to 1 and cycle the power to the servo drive.

See the following tables for the default DI signals of each control mode:

DI	Control mode				
	PT	PR	S/Sz	T/Tz	S-PT
	Default	Default	Default	Default	Default
	Signal	Signal	Signal	Signal	Signal
1	0x01	0x01	0x01	0x01	0x01
	SON	SON	SON	SON	SON
2	0x04	0x08	0x09	0x10	0x04
	CCLR	CTRG	TRQLM	SPDLM	CCLR
3	0x16	0x11	0x14	0x16	0x14
	TCM0	POS0	SPD0	TCM0	SPD0
4	0x17	0x12	0x15	0x17	0x15
	TCM1	POS1	SPD1	TCM1	SPD1
5	0x02	0x02	0x02	0x02	0x00
	ARST	ARST	ARST	ARST	-
6	0x22	0x22	0x22	0x22	0x00
	NL	NL	NL	NL	-
7	0x23	0x23	0x23	0x23	0x18
	PL	PL	PL	PL	S-P
8	0x21	0x21	0x21	0x21	0x21
	EMGS	EMGS	EMGS	EMGS	EMGS
9	0x00	0x00	0x00	0x00	0x00
	-	-	-	-	-

DI	Control mode				
	T-PR	S-T	PT-PR	PT-PR-S	PT-PR-T
	Default	Default	Default	Default	Default
	Signal	Signal	Signal	Signal	Signal
1	0x01	0x01	0x01	0x01	0x01
	SON	SON	SON	SON	SON
2	0x08	0x00	0x04	0x04	0x04
	CTRG	-	CCLR	CCLR	CCLR
3	0x11	0x14	0x08	0x08	0x08
	POS0	SPD0	CTRG	CTRG	CTRG
4	0x12	0x15	0x11	0x11	0x11
	POS1	SPD1	POS0	POS0	POS0
5	0x16	0x16	0x12	0x12	0x12
	TCM0	TCM0	POS1	POS1	POS1
6	0x17	0x17	0x13	0x24	0x24
	TCM1	TCM1	POS2	ORGP	ORGP
7	0x20	0x19	0x24	0x18	0x20
	T-P	S-T	ORGP	S-P	T-P
8	0x21	0x21	0x2B	0x2B	0x2B
	EMGS	EMGS	PT-PR	PT-PR	PT-PR
9	0x00	0x00	0x02	0x02	0x02
	-	-	ARST	ARST	ARST

Note: refer to Chapter 8 for the description of the DI signals.

See the following tables for the default DO signals of each control mode:

DO	Control mode				
	PT	PR	S/Sz	T/Tz	S-PT
	Default	Default	Default	Default	Default
	Signal	Signal	Signal	Signal	Signal
1	0x01	0x01	0x01	0x01	0x01
	SRDY	SRDY	SRDY	SRDY	SRDY
2	0x03	0x03	0x03	0x03	0x03
	ZSPD	ZSPD	ZSPD	ZSPD	ZSPD
3	0x09	0x09	0x04	0x04	0x04
	HOME	HOME	TSPD	TSPD	TSPD
4	0x05	0x05	0x08	0x08	0x05
	TPOS	TPOS	BRKR	BRKR	TPOS
5	0x07	0x07	0x07	0x07	0x07
	ALRM	ALRM	ALRM	ALRM	ALRM
6	0x00	0x00	0x00	0x00	0x00
	-	-	-	-	-

DO	Control mode				
	T-PR	S-T	PT-PR	PT-PR-S	PT-PR-T
	Default	Default	Default	Default	Default
	Signal	Signal	Signal	Signal	Signal
1	0x01	0x01	0x01	0x01	0x01
	SRDY	SRDY	SRDY	SRDY	SRDY
2	0x03	0x03	0x03	0x03	0x03
	ZSPD	ZSPD	ZSPD	ZSPD	ZSPD
3	0x04	0x04	0x09	0x09	0x09
	TSPD	TSPD	HOME	HOME	HOME
4	0x05	0x00	0x05	0x05	0x05
	TPOS	-	TPOS	TPOS	TPOS
5	0x07	0x07	0x07	0x07	0x07
	ALRM	ALRM	ALRM	ALRM	ALRM
6	0x00	0x00	0x00	0x00	0x00
	-	-	-	-	-

Note: refer to Chapter 8 for the description of the DO signals.

If the default DI/DO functions cannot meet the application requirements, you can refer to the following tables and specify the DI/DO functions by setting the DI and DO codes to the corresponding parameters.

Signal		CN1 Pin No.	Corresponding parameter	Signal		CN1 Pin No.	Corresponding parameter
Standard DI	DI1-	9	P2.010	Standard DI	DI6-	32	P2.015
	DI2-	10	P2.011		DI7-	31	P2.016
	DI3-	34	P2.012		DI8-	30	P2.017
	DI4-	8	P2.013		DI9-	12	P2.036
	DI5-	33	P2.014		-	-	-

Signal		CN1 Pin No.	Corresponding parameter	Signal		CN1 Pin No.	Corresponding parameter
Standard DO	DO1+	7	P2.018	Standard DO	DO4+	1	P2.021
	DO1-	6			DO4-	26	
	DO2+	5	P2.019		DO5+	28	P2.022
	DO2-	4			DO5-	27	
	DO3+	3	P2.020		DO6+	16	P2.041
	DO3-	2			DO6-	15	

3.2.3 CN1 wiring diagrams

For the analog speed command and the analog torque (thrust) command of the servo drive, the valid voltage is between -10V and +10V. You can set the command value that corresponds to the voltage range with the relevant parameters.

C1: input for analog speed / torque (thrust) command

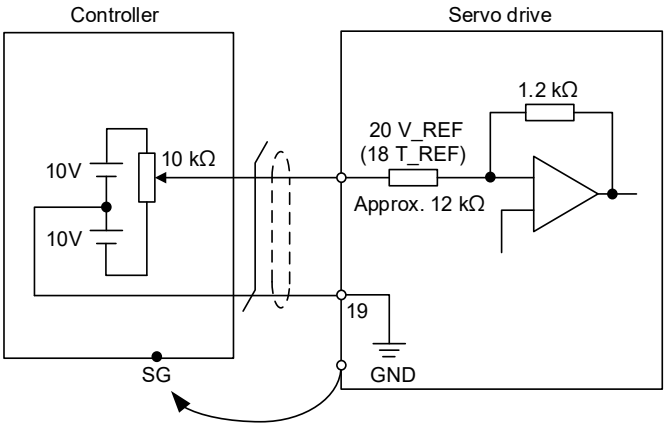

C2: output for analog monitoring command (MON1 and MON2)

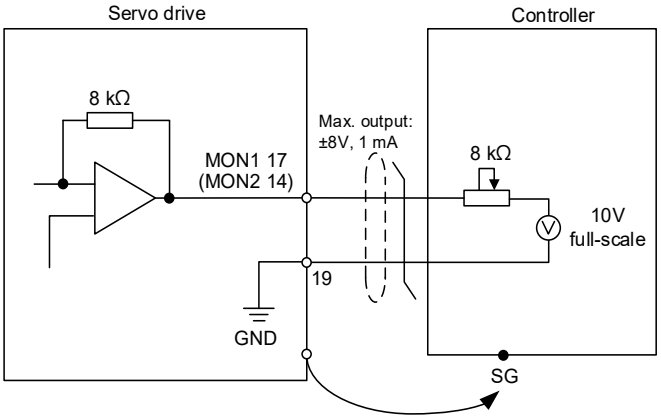

The single-phase maximum pulse input frequency is 200 kHz for the open collector.

Caution: when the source for the pulse input is open collector NPN or PNP type equipment, you must connect the external power (24V ± 10%) to the PULL HI pins.

- **Do not connect the 24V power to the SIGN+ and SIGN- pins at the same time, or the circuit elements will be damaged.**
- **Do not connect the 24V power to the PULSE+ and PULSE- pins at the same time, or the circuit elements will be damaged.**

C3-1: the source for the pulse input is open collector NPN type equipment, which uses the external power supply.

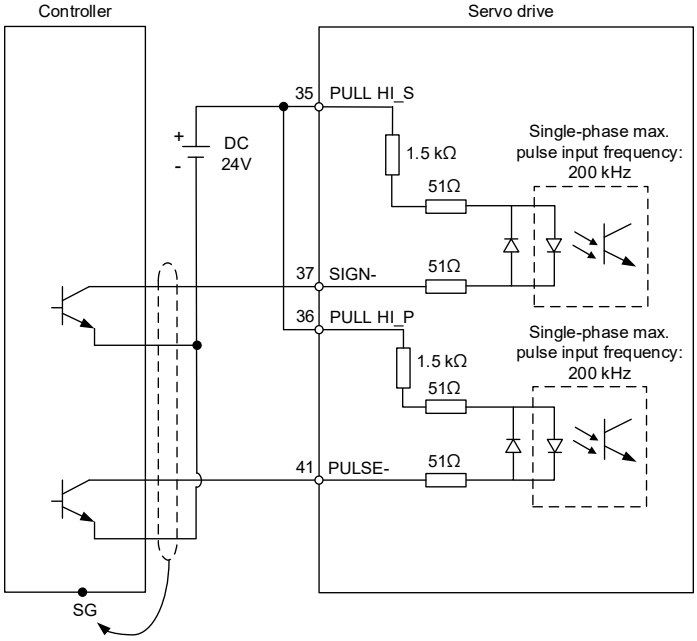

C3-2: the source for the pulse input is open collector PNP type equipment, which uses the external power supply.

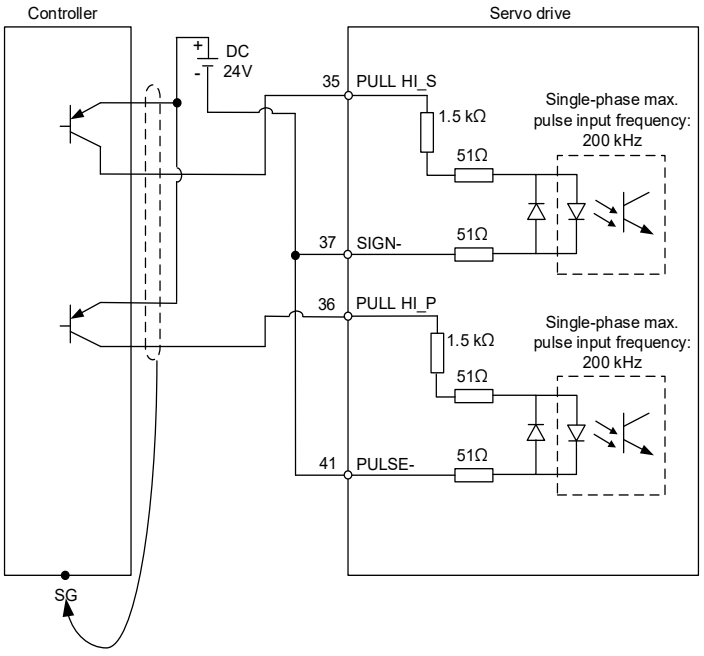

C4: pulse input (differential line driver input) can only be used with 2.8V - 3.6V power systems.

Do not use it with 24V power.

Pulse	Type		Max. input frequency
High speed pulse	Differential signal	Pulse train + sign	4 Mpps
		CW and CCW pulses	
		A phase + B phase (after quadruple frequency)	8 Mpps
Low speed pulse	Differential signal		200 Kpps

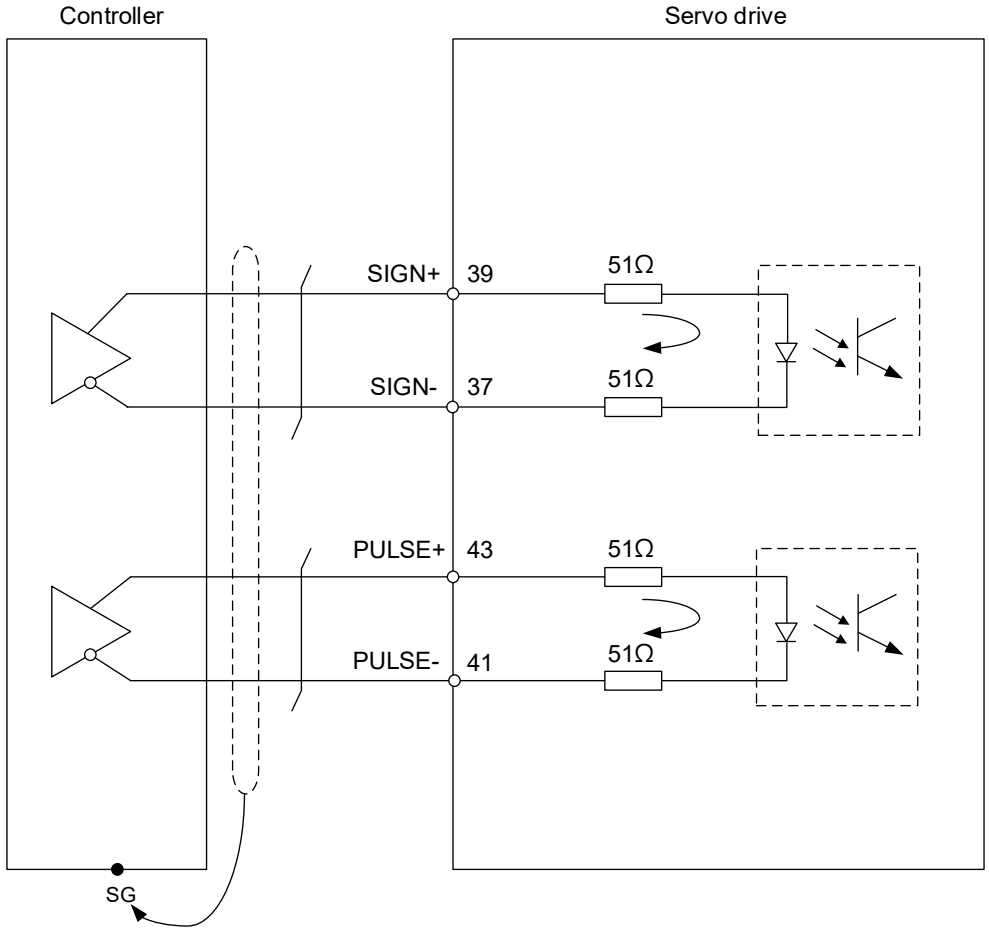

Note: refer to the description of P1.000 in Chapter 8 for setting details.

Caution: when the drive connects to an inductive load, you must install the diode.

DO specification:

Permissible current: 40 mA and below; surge current: 100 mA and below;

maximum voltage: 30V.

Diode specification:

1A and above, 500V and above (such as the 1N4005 diode).

C5: DO wiring - the servo drive uses an external power supply and the resistor is for general load.

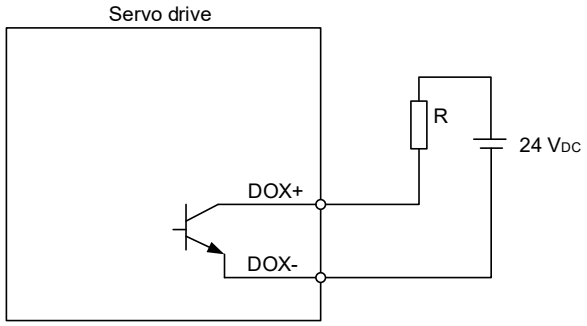

C6: DO wiring - the servo drive uses an external power supply and the resistor is for inductive load.

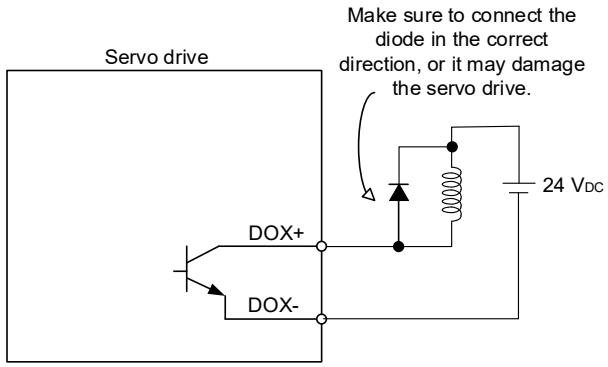

3

DI wiring - input signals by relay or open collector transistor.

Conditions of DI On / Off:

On: 15V - 24V; input current = 3 mA.

Off: 5V and below; the input current must not be higher than 0.5 mA.

C7: NPN transistor (SINK mode)

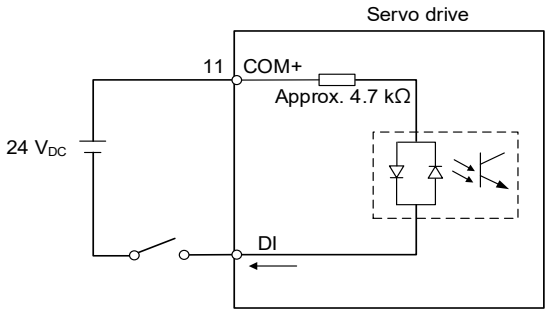

C8: PNP transistor (SOURCE mode)

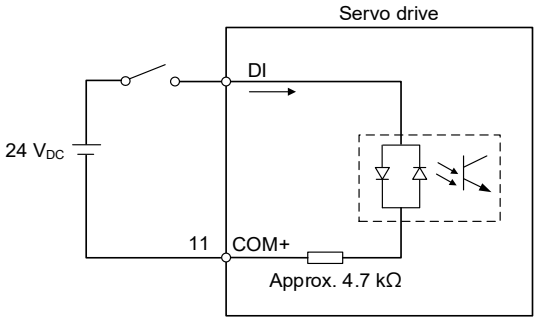

C9: output for encoder position signal (line driver)

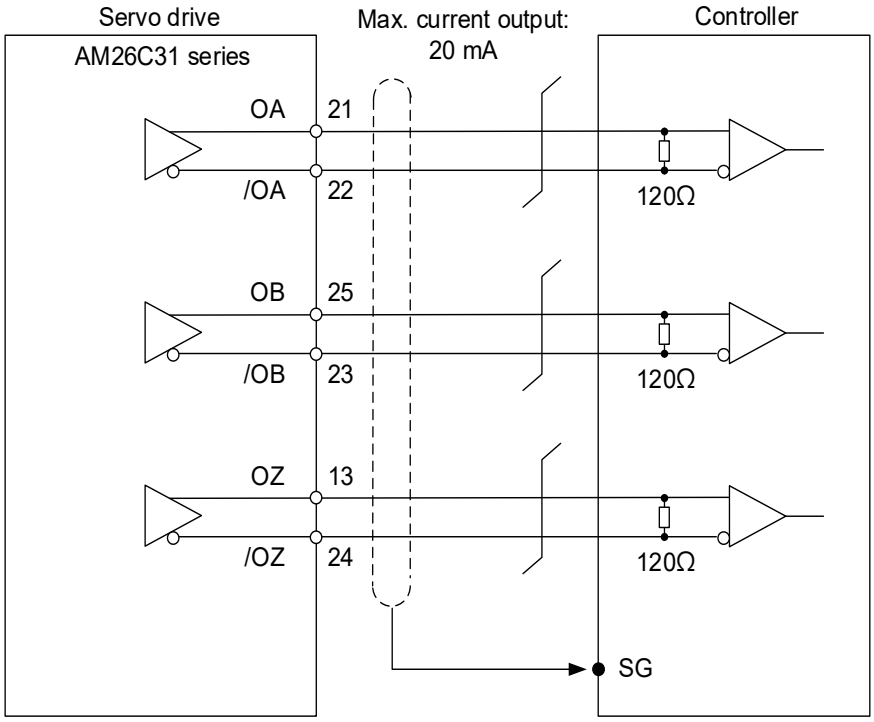

Note: it is suggested that you connect the GND of the controller and the GND of the servo drive in parallel when the voltage difference between the two GND terminals is too great.

C10: output for encoder position signal (photocoupler)

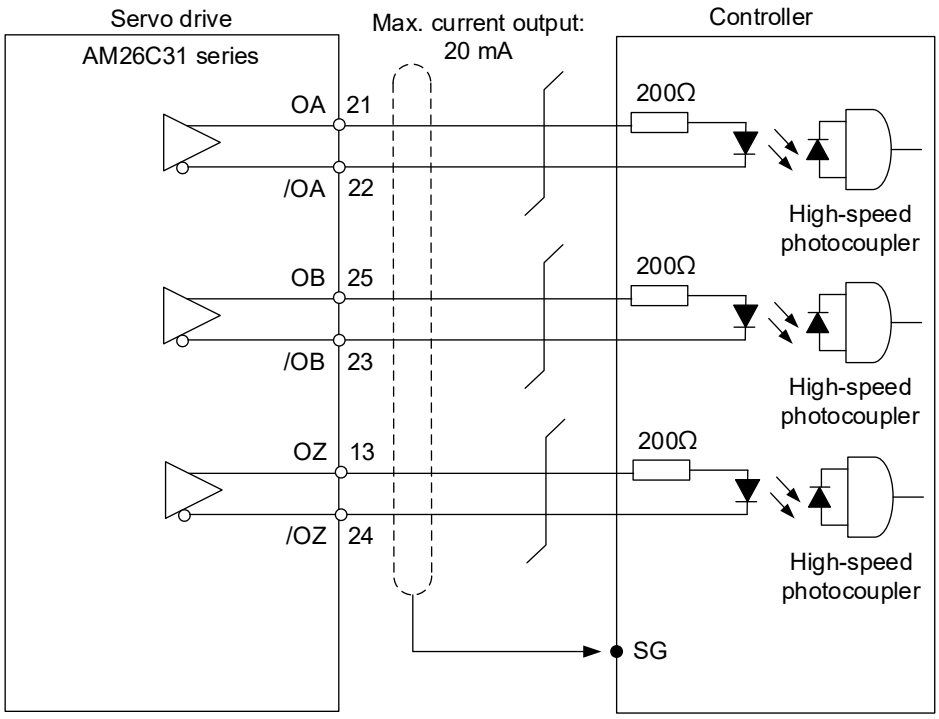

3

C11: encoder OCZ output (open-collector Z pulse output)

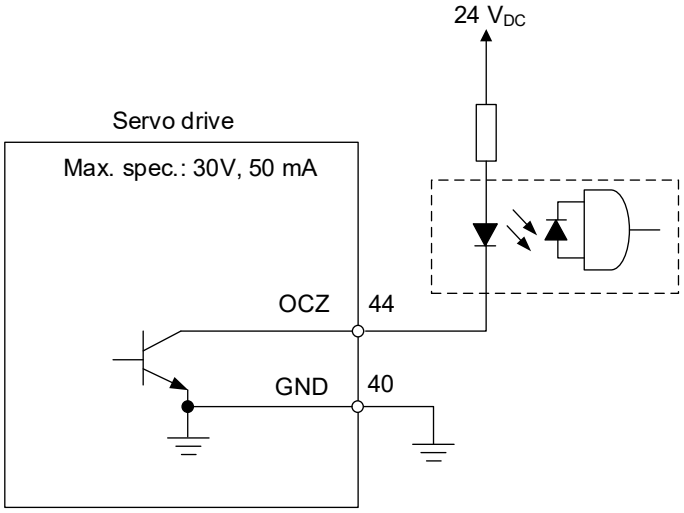

3.3 Wiring for the CN2 encoder connector

The wiring of the CN2 encoder connector is shown as follows:

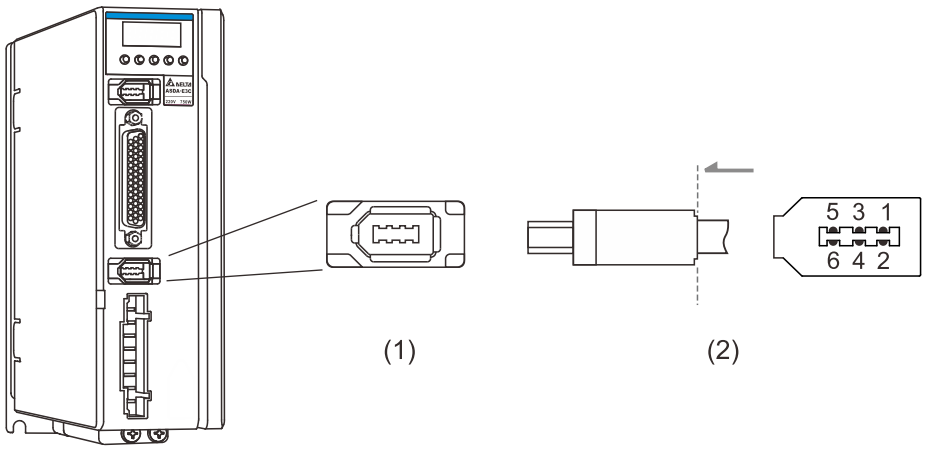

(1) CN2 connector (female); (2) CN2 connector (male)

WARNING

- DO NOT connect to Pin 3 and Pin 4 of the servo drive CN2 connector. These pins are for internal use only. Wiring them will cause damage to the internal circuit.
- When an absolute encoder is used, the battery supplies power directly to the encoder, so wiring the battery wires to the servo drive CN2 connector is not required.
- Use a twisted-pair cable with metal braided shielding that conforms to the UL2464 standard. When selecting the wires, refer to Section 3.1.5.
- Separate the L1, L2 / RST power cable and UVW power cable from the encoder cable. The separation distance should be at least 30 cm (11.8 inches).

CN2 connector	Connector type Model number
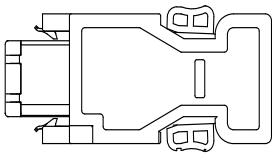	IEEE 1394 ACS3-CNENC200

3

3.3.1 F40 - F80 motors – Encoder cables

Encoder cable	
Standard connector	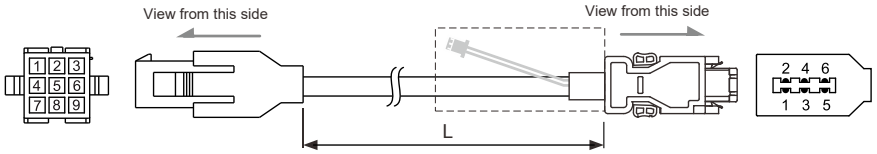
Bulkhead connector - cable exit direction towards motor shaft	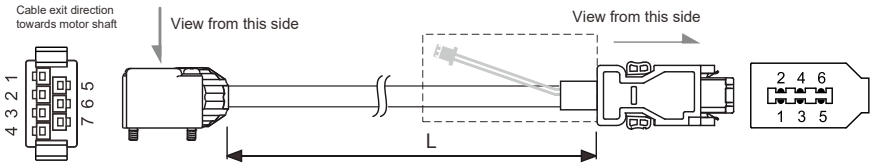
Bulkhead connector - cable exit direction towards encoder	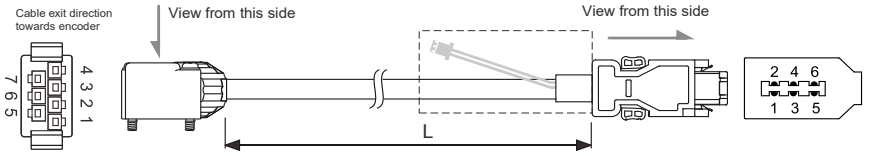

Note: only the absolute encoder cables have the battery box connection wire.

Pin assignment:

Encoder cable connector				CN2 of servo drive		Description
Motor with cables		Motor with bulkhead connectors				
Standard	Color	Bulkhead	Color	Pin No.	Signal	
7	Brown	3	Red	1	+5V	+5V power supply
8	Blue	4	Orange	2	GND	Power ground
-	-	-	-	3	-	**DO NOT connect these pins. They are for internal use only.**
-	-	-	-	4	-	
1	White	1	Blue	5	T+	Serial communication signal (+)
4	White / Red	2	Purple	6	T-	Serial communication signal (-)
9	-	7	-	Case	Shielding	Shielding
2	Red	5	Brown	-	-	+3.6V battery
5	Black	6	Black	-	-	Battery ground

3.3.2 F100 - F180 motors – Encoder cables

Encoder cable	
Military connector - straight	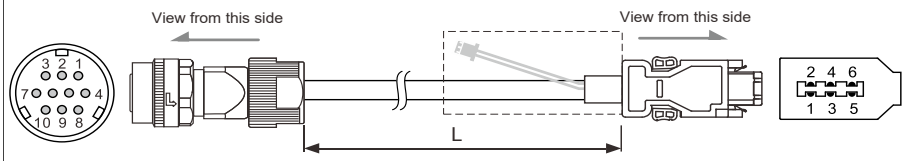
Military connector - right angle	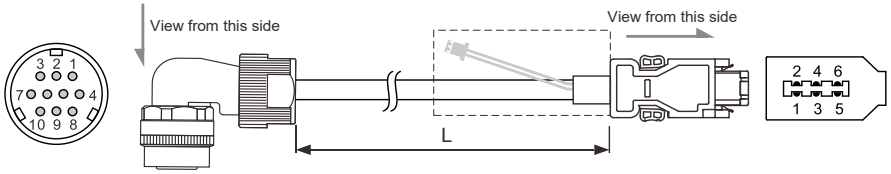

Note: only the absolute encoder cables have the battery box connection wire.

Pin assignment:

Encoder cable connector		CN2 of servo drive		Description
Military connector	Color	Pin No.	Signal	
4	Brown	1	+5V	+5V power supply
9	Blue	2	GND	Power ground
-	-	3	-	**DO NOT connect these pins. They are for internal use only.**
-	-	4	-	
1	White	5	T+	Serial communication signal (+)
2	White / Red	6	T-	Serial communication signal (-)
10	-	Case	Shielding	Shielding
6	Red	-	-	+3.6V battery
5	Black	-	-	Battery ground

3.3.3 Installing shielded wires for CN2 connector

Step 1	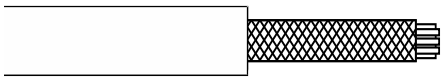	Strip the cable and expose the wires covered by the metal shield. The exposed wire length should be 20 - 30 mm (0.79 - 1.18 inches).
Step 2	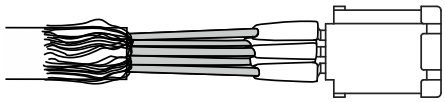	Unravel the metal shield and fold it back. Refer to the pin assignment in the preceding tables to connect the wires.
Step 3	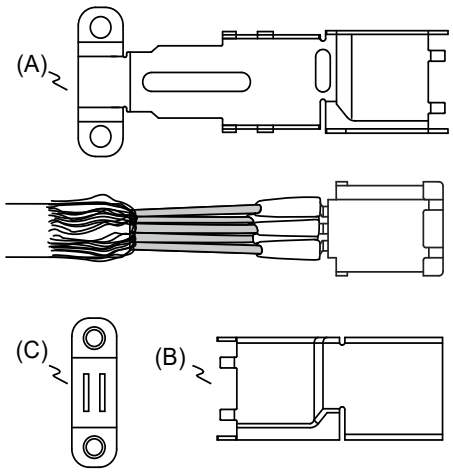	You need the following items to assemble the connector: (A) Big metal case (B) Small metal case (C) U-shaped bracket
Step 4	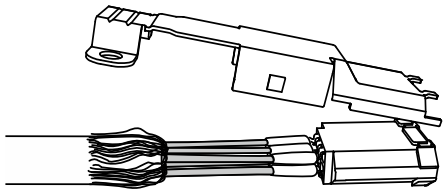	Place the (A) big metal case to cover the exposed metal shield. Make sure the metal shield is completely covered to maintain the integrity of the shielding.
Step 5	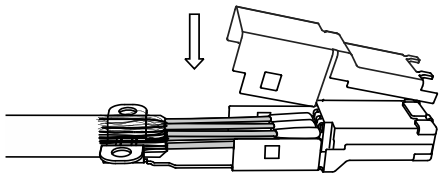	Fasten the (B) small metal case on the other side.
Step 6	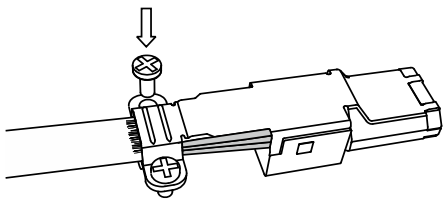	Place the (C) U-shaped bracket under the bracket of the (A) big metal case, and then secure (A) and (C) together with screws from the (A) side.
Step 7	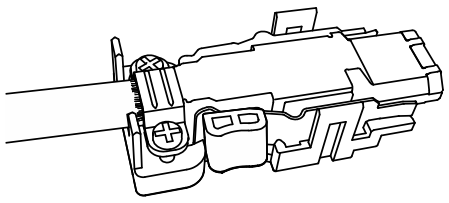	Fit one side of the plastic case over the connector.
Step 8	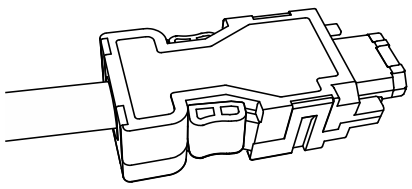	Place and fasten the other side of the case to complete assembling the connector.

3.4 Wiring for the CN3 connector

With the CN3 connector, the E3C-L servo drive can connect to the PC, PLC, or HMI through Modbus. The CN3 connector supports RS-232 and RS-485 communication interfaces. RS-232 has a communication distance of approximately 15 m (49.2 ft); RS-485 offers a further communication distance and allows you to connect multiple servo drives simultaneously.

When the servo drive is connected to ASDA-Soft, the software automatically sets P3.005.X = 1 to use RS-232 communication. After completing ASDA-Soft operations, you need to manually set P3.005.X = 0 or cycle power on the servo drive to use the RS-232 or RS-485 standard Modbus communication. For details, refer to the description of P3.005 in Chapter 8.

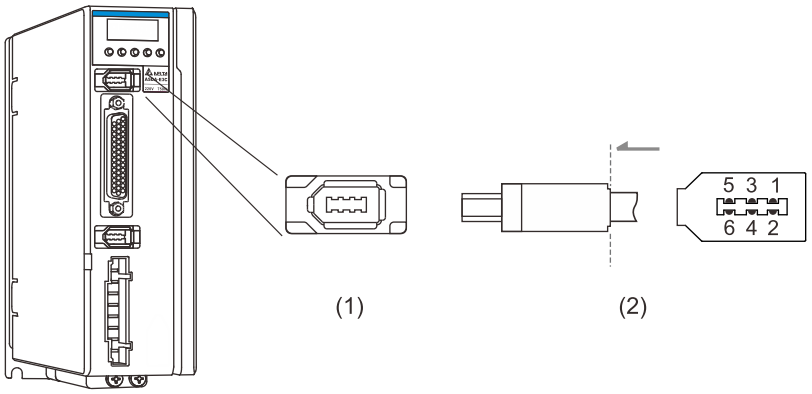

(1) CN3 connector (female); (2) CN3 connector (male)

Pin assignment:

Pin No.	Signal	Description
1	GND	Ground for +5V and signals.
2	RS-232_TX	Servo drive data transmission. Connects to the RS-232_RX of PC
3	-	Reserved
4	RS-232_RX	Servo drive data reception. Connects to the RS-232_TX of PC
5	RS-485-	Differential terminal (-) for servo drive data transmission.
6	RS-485+	Differential terminal (+) for servo drive data transmission.

Note:
1. Refer to Section 9.1 for the RS-485 wiring.
2. There are two types of commercially available IEEE 1394 communication cables. In one type, the internal ground terminal (Pin 1) is shorted to the shield. Using this type of cable will result in communication failure; do not short-circuit the GND wire of the communication cable to the terminal housing.

3

Connecting multiple servo drives through RS-485:

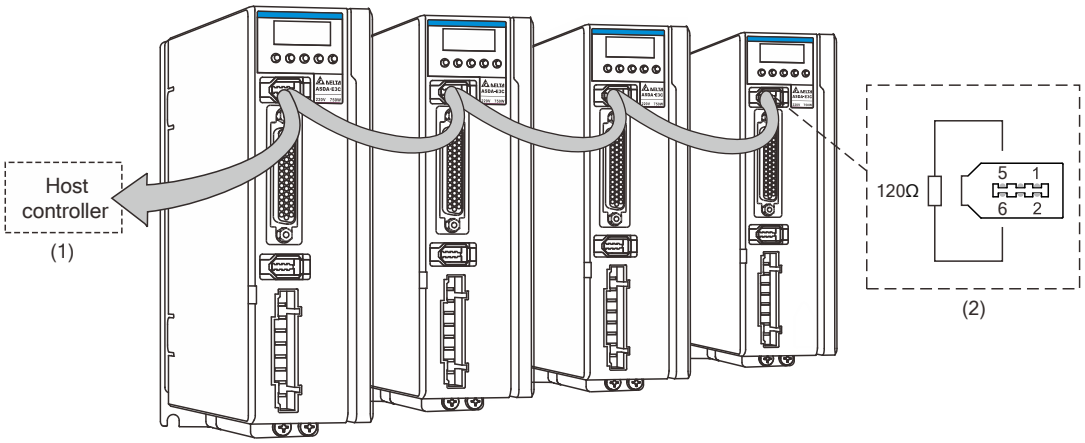

(1) Connect to the controller / PLC; (2) Wiring for RS-485 terminal resistor

Note:

1. You can connect up to 32 axes through RS-485. The communication quality and the allowable number of connected axes are determined by the controller's specifications, quality of wires, grounding, interference, and whether a shielded twisted-pair cable is used.
2. It is suggested that you use a terminal resistor of 120Ω (ohm) and 0.5 W (or more).
3. When connecting multiple servo drives through RS-485, put a terminal resistor in the last servo drive.
4. When using RS-485 Modbus communication to connect two or more servo drives in series, the interval between each communication command should be over 160 ms.

3.5 Standard wiring example

3.5.1 Position (PT) control mode – differential line driver input

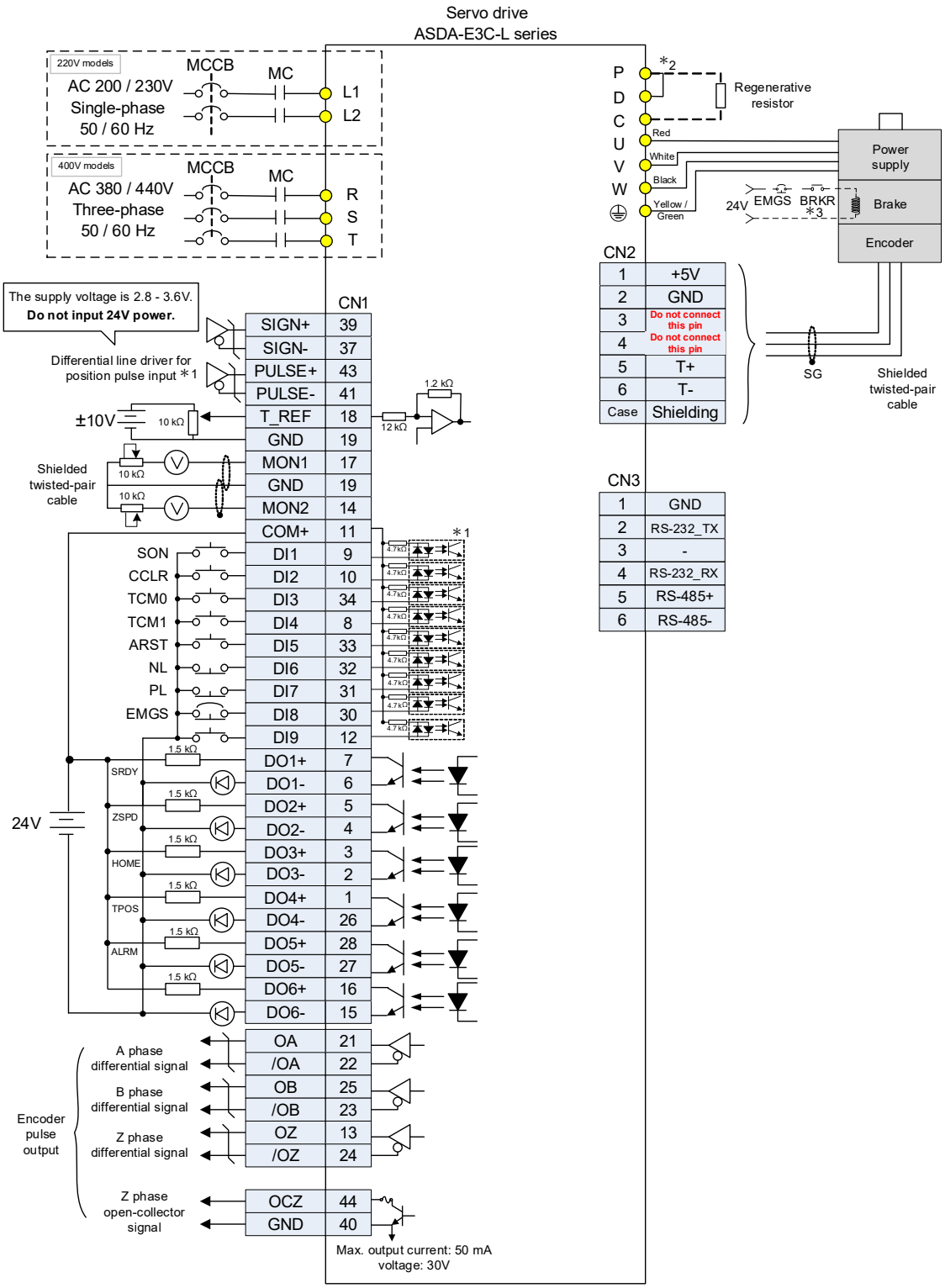

Note:

*1. The preceding figure uses the differential line driver for position pulse input. For open collector input and other wiring diagrams, refer to Section 3.2.3.

*2. The 220V 400 W models have no built-in regenerative resistor.

*3. The brake coil has no polarity.

*4. To meet the DI/DO defaults in the preceding diagram, set P1.001.U = 1, P1.001.YX = 00, and then cycle power on the servo drive.

3

3.5.2 Position (PT) control mode – open collector input

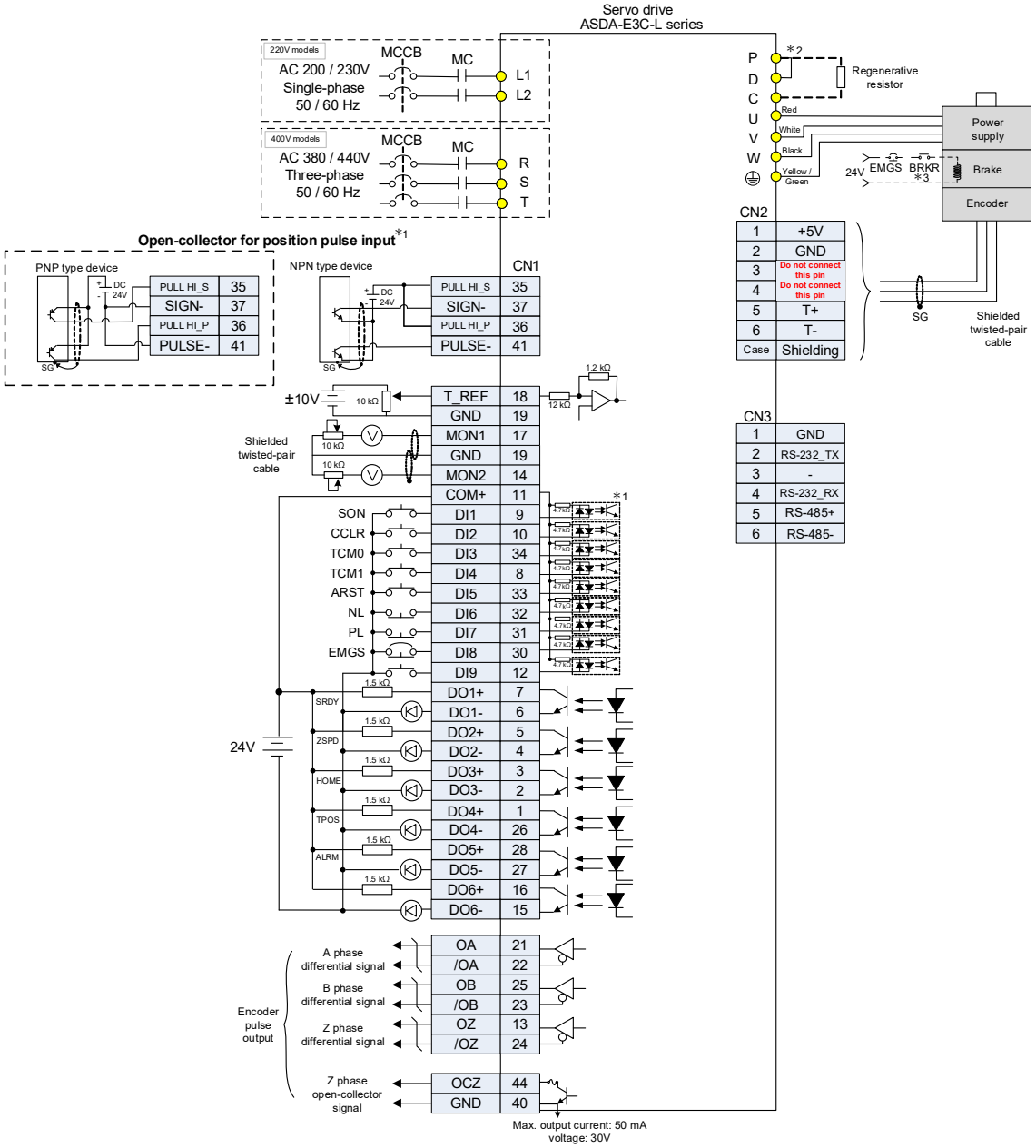

Note:

*1. The preceding figure uses the open collector for position pulse input. For differential line driver input and other wiring diagrams, refer to Section 3.2.3.

*2. The 220V 400 W models have no built-in regenerative resistor.

*3. The brake coil has no polarity.

*4. To meet the DI/DO defaults in the preceding diagram, set P1.001.U = 1, P1.001.YX = 00, and then cycle power on the servo drive.

3.5.3 Position (PR) control mode – internal position commands

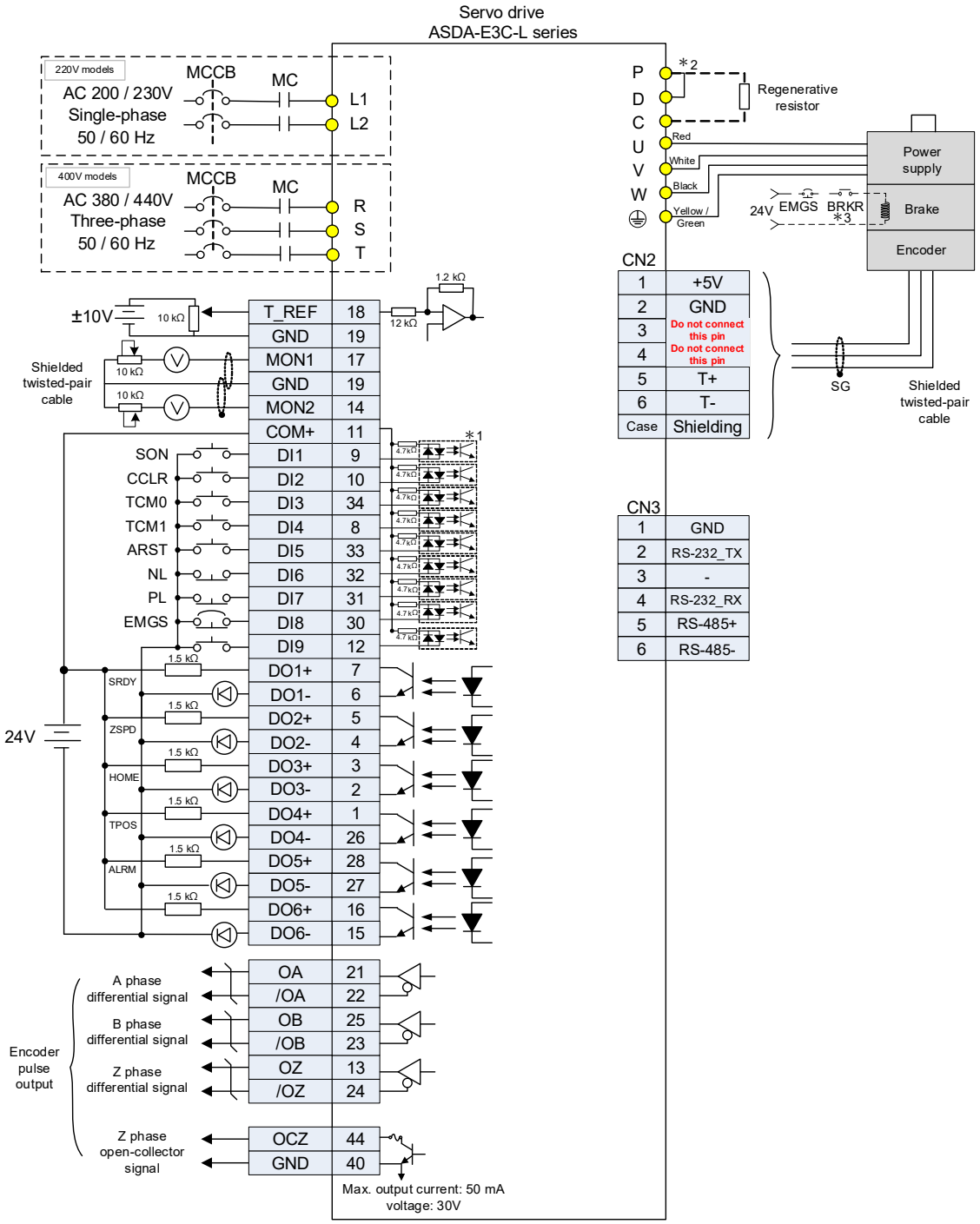

Note:
*1. Refer to Section 3.2.3 for wiring.
*2. The 220V 400 W models have no built-in regenerative resistor.
*3. The brake coil has no polarity.
*4. To meet the DI/DO defaults in the preceding diagram, set P1.001.U = 1, P1.001.YX = 01, and then cycle power on the servo drive.

3

3.5.4 Speed (S/Sz) control mode

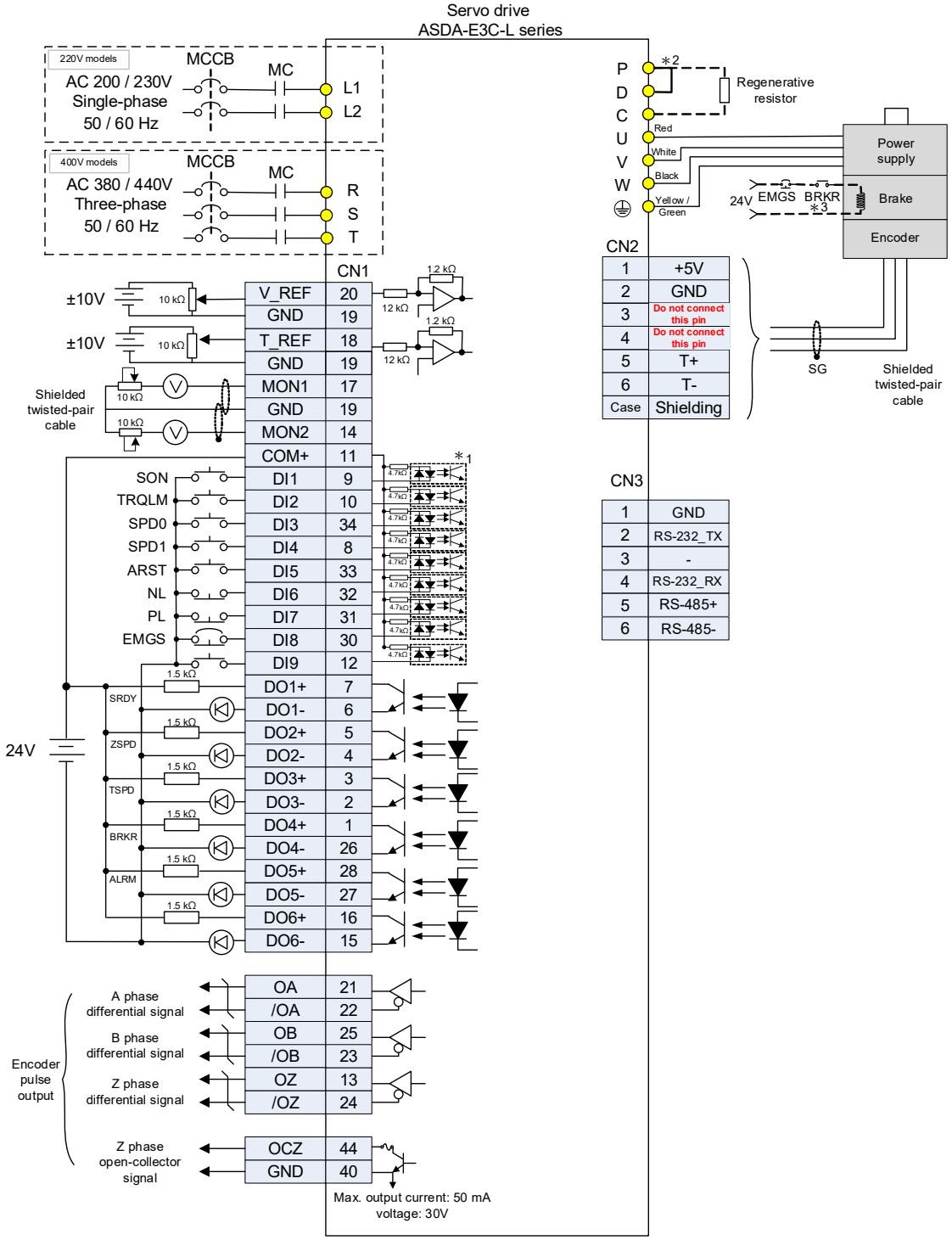

Note:
*1. Refer to Section 3.2.3 for wiring.
*2. The 220V 400 W models have no built-in regenerative resistor.
*3. The brake coil has no polarity.
*4. To meet the DI/DO defaults in the preceding diagram, set P1.001.U = 1, P1.001.YX = 02 or 04, and then cycle power on the servo drive.

3.5.5 Torque (T/Tz) control mode

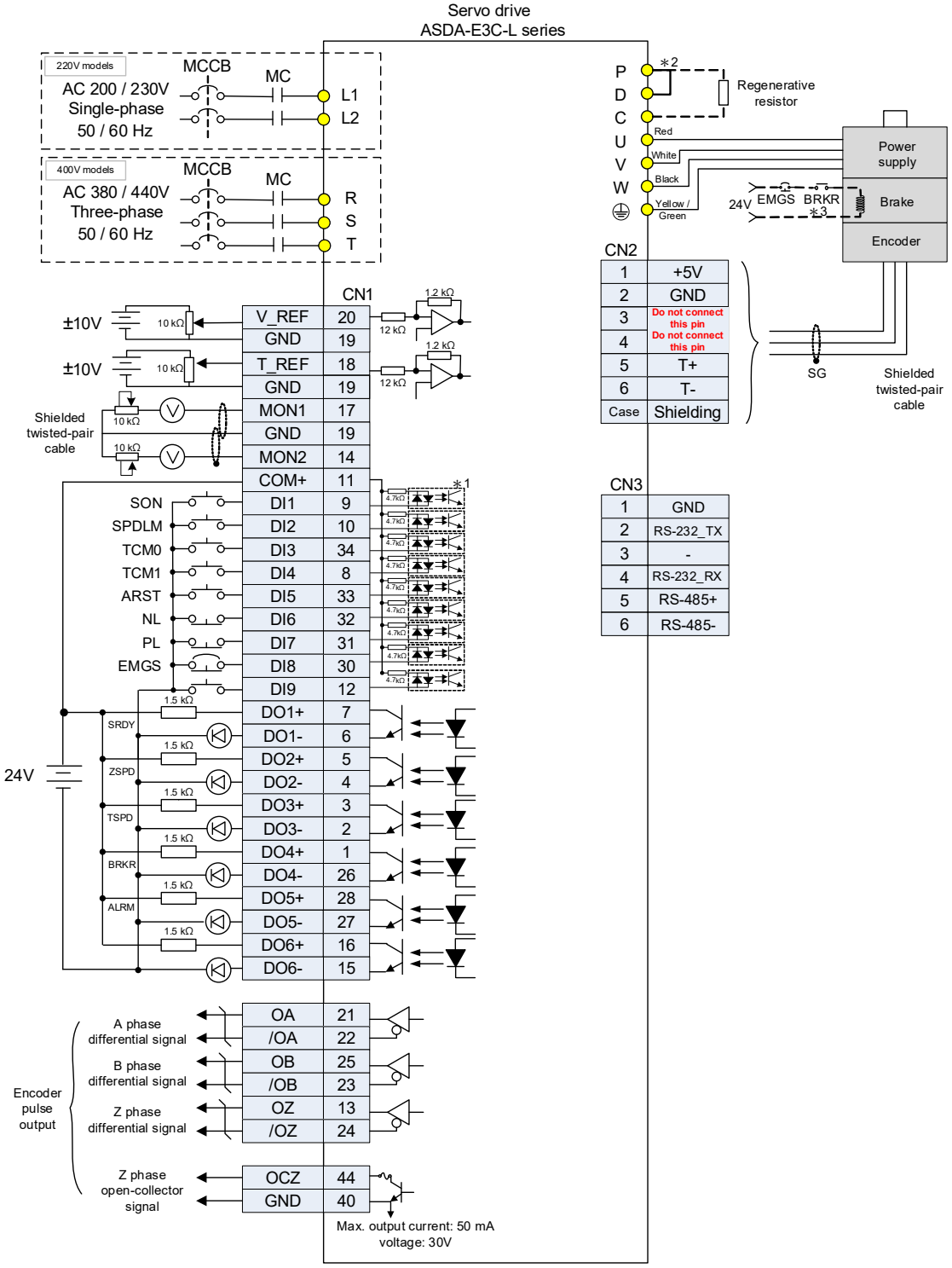

Note:
*1. Refer to Section 3.2.3 for wiring.
*2. The 220V 400 W models have no built-in regenerative resistor.
*3. The brake coil has no polarity.
*4. To meet the DI/DO defaults in the preceding diagram, set P1.001.U = 1, P1.001.YX = 03 or 05, and then cycle power on the servo drive.

(This page is intentionally left blank.)

Panel Operation and Testing

4

This chapter describes the display and operation for the ASDA-E3C-L servo drive panel as well as the testing for the servo drive and motor.

4.1 Panel description ····· 4-2
4.2 Parameter setting procedure ····· 4-3
4.3 Status display ····· 4-6
4.3.1 Data save status ····· 4-6
4.3.2 Decimal points ····· 4-6
4.3.3 Alarm messages ····· 4-6
4.3.4 Positive and negative value setting ····· 4-7
4.3.5 Monitoring display ····· 4-7
4.3.6 Display when power is off ····· 4-9
4.4 General functions ····· 4-10
4.4.1 Operation of fault record display ····· 4-10
4.4.2 Force DO on ····· 4-11
4.4.3 Digital input diagnosis ····· 4-12
4.4.4 Digital output diagnosis ····· 4-12
4.5 Testing ····· 4-13
4.5.1 Initial testing ····· 4-13
4.5.2 Applying power to the servo drive ····· 4-14
4.5.3 JOG trial run without load ····· 4-18
4.5.4 Trial run without load (Speed mode) ····· 4-19
4.5.5 Trial run without load (Position mode) ····· 4-21

4

4.1 Panel description

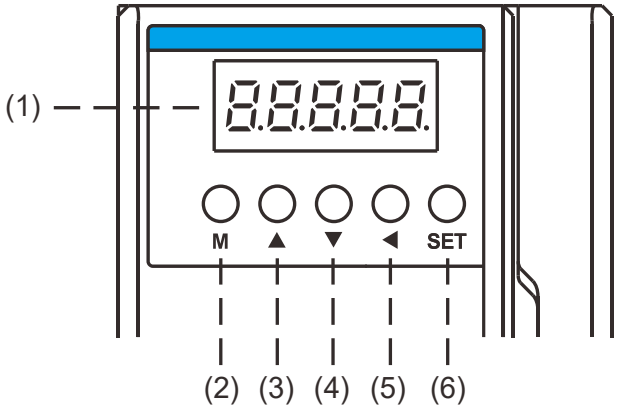

(1) Display: the 5-digit, 7-segment LED display shows the monitoring codes, parameter numbers, and setting values.

(2) MODE key (M): switches the display among Monitoring mode, Parameter mode, and Alarm mode. In Editing mode, pressing this key switches back to Parameter mode.

(3) UP (▲) key: changes the monitoring codes, parameter numbers, and setting values.

(4) DOWN (▼) key: changes the monitoring codes, parameter numbers, and setting values.

(5) SHIFT (◄) key: in Monitoring mode, pressing this key switches between high / low word display. In Parameter mode, pressing this key changes the group number. In Editing mode, pressing this key moves the blinking (selected) digit to the left for adjusting the value.

(6) SET key: in Monitoring mode, pressing this key switches between decimal and hexadecimal display. In Parameter mode, pressing this key switches to Editing mode and displays the setting values. In Editing mode, pressing this key saves the setting values.

4.2 Parameter setting procedure

Switching modes:

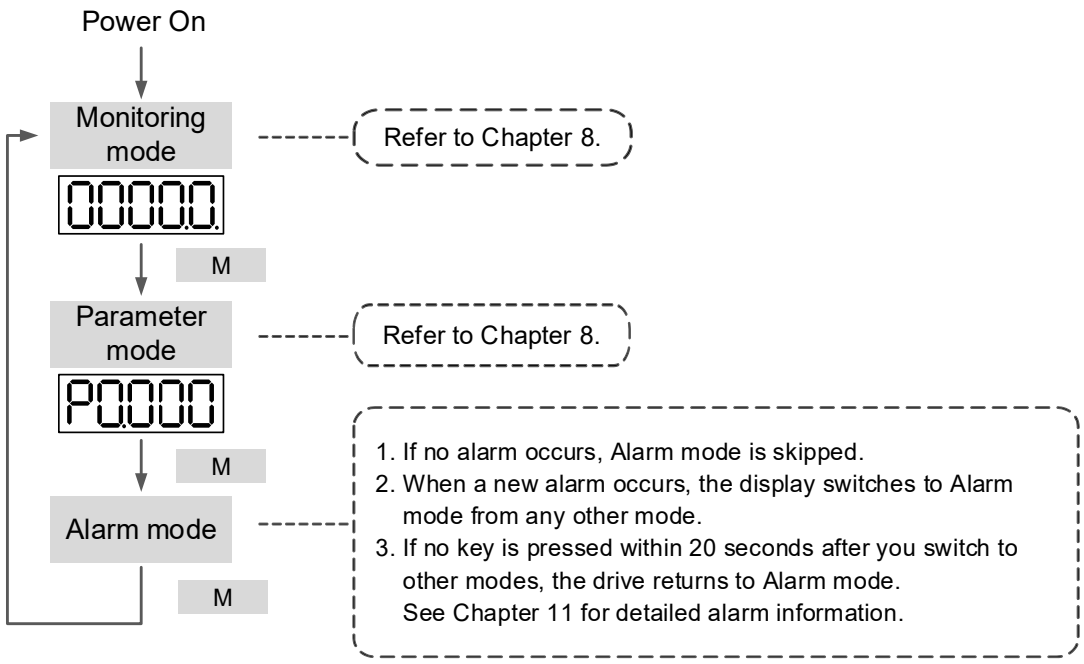

Operating in each mode:

Monitoring mode

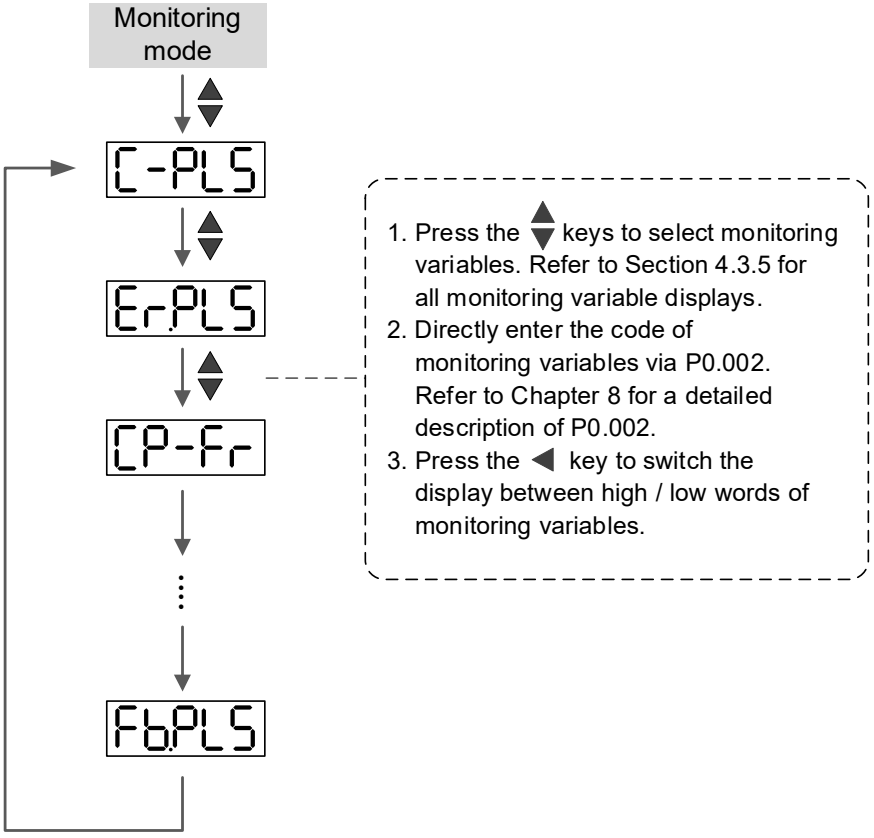

4

Parameter mode

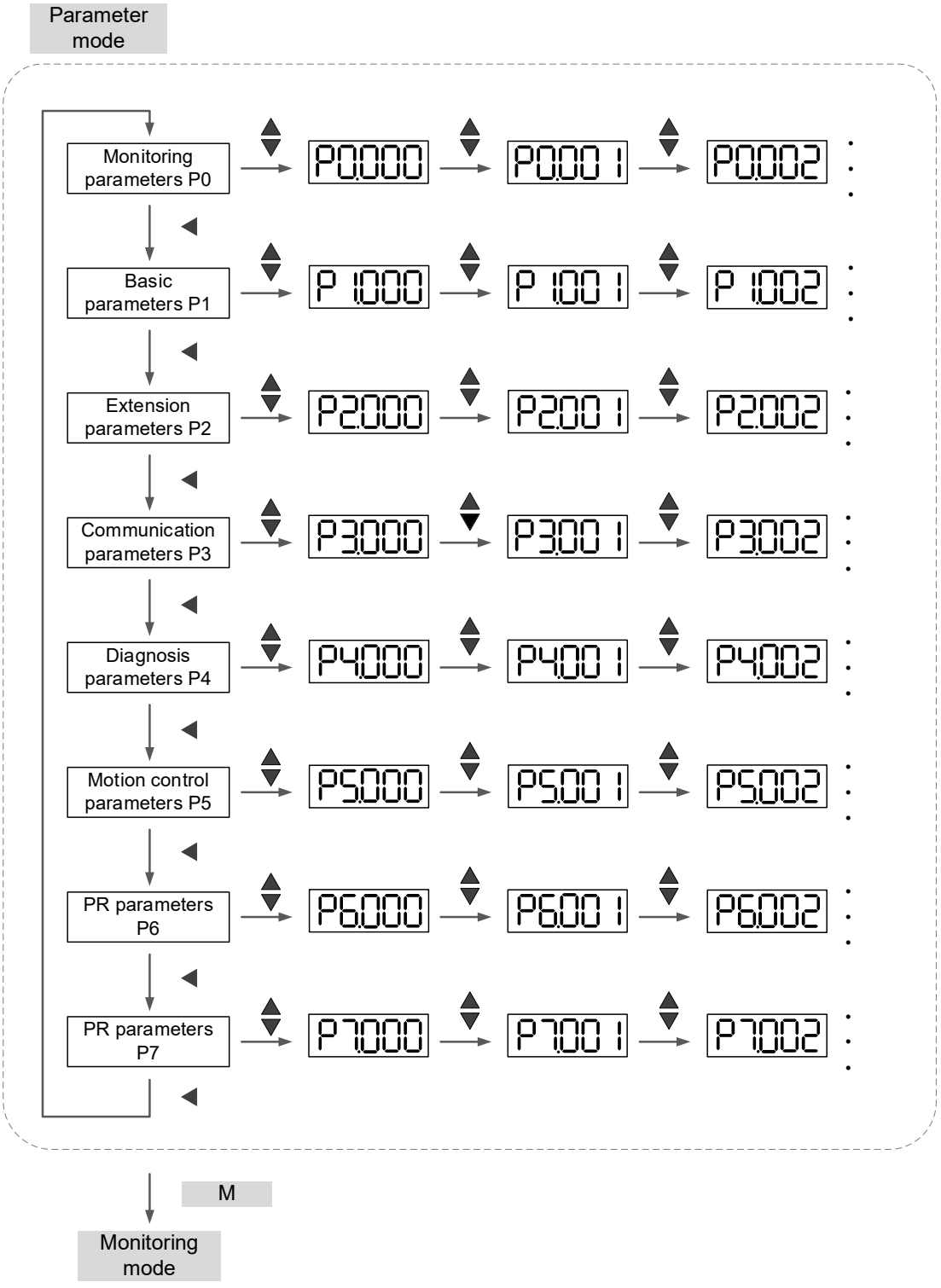

Editing mode

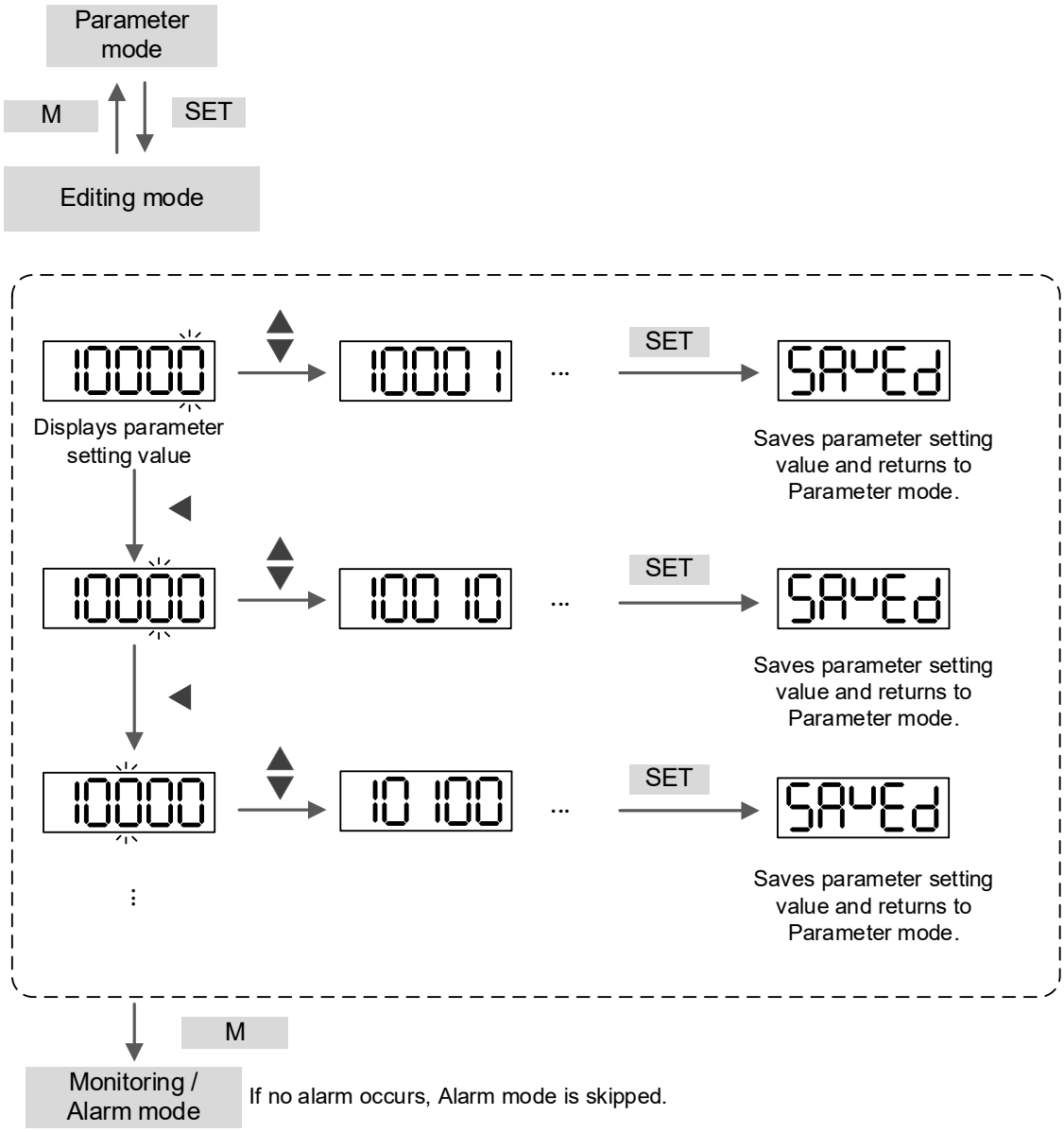

4

4.3 Status display

4.3.1 Data save status

When you complete the parameter setting and press the SET key to save the parameters, the panel displays the symbol of the corresponding status for one second.

Display symbol	Description
	The setting value is correctly saved (Saved).
	The parameter is read-only and write-protected (Read-only).
	Wrong password or no password is entered (Locked).
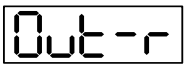	The setting value is incorrect or a reserved value is set (Out of Range).
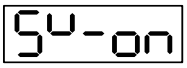	The parameter cannot be changed when the servo is in the Servo On state (Servo On).
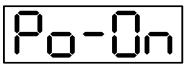	The setting takes effect only after you cycle power on the servo drive (Power On).

4.3.2 Decimal points

Display example	Description
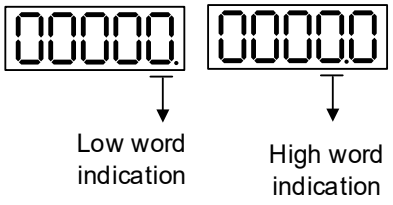	High word / low word indication: indicates the high word or low word when the 32-bit data is displayed in decimal format.
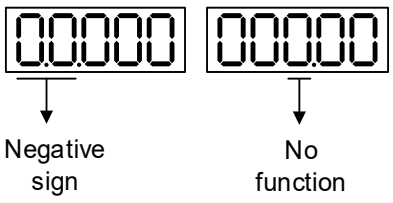	Negative sign: the two decimal points on the left represent the negative sign when the 16- or 32-bit data is displayed in decimal format. When in hexadecimal format, the panel only shows positive values.

4.3.3 Alarm messages

Display symbol	Description
	When an error occurs, the servo drive panel displays ‘AL’ as the alarm symbol and ‘nnn’ as the alarm code. Refer to Chapter 11 Troubleshooting for alarm details.

4.3.4 Positive and negative value setting

In Editing mode, pressing and holding the SHIFT (◄) key for 2 seconds switches between the positive and negative signs. If the value is out of the parameter setting range after switching, then the servo drive automatically resets it to the original value.

Display example	Description
	The positive value has no decimal points.
	The negative value has two decimal points on the left.

4.3.5 Monitoring display

When you apply power to the drive, the panel shows the monitoring display symbol for one second and then enters Monitoring mode. In Monitoring mode, press the UP (▲) or DOWN (▼) key to change the displayed monitoring variable. Or you can directly set P0.002 to specify the monitoring code. When the drive is powered, the default monitoring code is determined by the value of P0.002. For example, if the value of P0.002 is 4, when the drive is powered, the panel shows “C-PLS” first and then the input number of pulse commands. Refer to the following table for more information. For all monitoring variables, refer to Table 8.3 Monitoring variables descriptions in Chapter 8.

P0.002 setting value	Display symbol	Description	Unit
0		Motor feedback pulse number (after the scaling of E-Gear ratio)	PUU
1	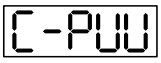	Input number of pulse commands (after the scaling of E-Gear ratio)	PUU
2	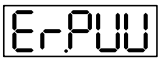	Error between control command pulse and feedback pulse number	PUU
3		Motor feedback pulse number (encoder unit)	pulse
4	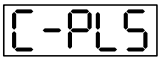	Input number of pulse commands (before the scaling of E-Gear ratio) (encoder unit)	pulse
5	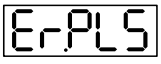	Error pulse number (after the scaling of E-Gear ratio) (encoder unit)	pulse
6		Position command frequency	Kpps
7	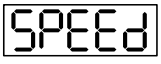	Motor speed	rpm
8		Speed command	Volt
9	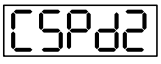	Speed command	rpm
10	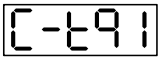	Torque command	Volt
11	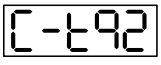	Torque command	%

4

P0.002 setting value	Display symbol	Description	Unit
12	AUG-L	Average torque	%
13	PE-L	Peak torque	%
14	U bUS	Main circuit voltage	Volt
15	J-L	Ratio of load inertia to motor inertia Note: if the display shows 13.0, it means the load inertia ratio is 13.	1 times
16	IGbt.t	IGBT temperature	°C
17	rSn.Fr	Resonance frequency (low word is the first resonance point and high word is the second resonance point)	Hz
18	d IFF.2 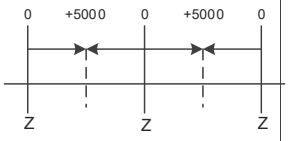	The absolute pulse number counting from the encoder Z phase (origin). It is -4999 to +5000 pulses when the motor rotates in the forward or reverse direction starting from the origin (0).	-
19	MAP 1	Mapping parameter #1: shows the content of parameter P0.025 (P0.035 specifies the mapping target)	-
20	MAP2	Mapping parameter #2: shows the content of parameter P0.026 (P0.036 specifies the mapping target)	-
21	MAP3	Mapping parameter #3: shows the content of parameter P0.027 (P0.037 specifies the mapping target)	-
22	MAP4	Mapping parameter #4: shows the content of parameter P0.028 (P0.038 specifies the mapping target)	-
23	UAr-1	Monitoring variable #1: shows the content of parameter P0.009 (P0.017 specifies the monitoring variable)	-
24	UAr-2	Monitoring variable #2: shows the content of parameter P0.010 (P0.018 specifies the monitoring variable)	-
25	UAr-3	Monitoring variable #3: shows the content of parameter P0.011 (P0.019 specifies the monitoring variable)	-
26	UAr-4	Monitoring variable #4: shows the content of parameter P0.012 (P0.020 specifies the monitoring variable)	-

The following table shows the panel display of 16-bit and 32-bit values.

Display example		Description	
	(Dec)	16-bit	If the value is 1234, the panel displays 01234 (in decimal format).
	(Hex)		If the value is 0x1234, the panel displays 1234 (in hexadecimal format; the MSB is not shown).
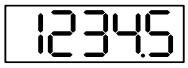	(Dec high)	32-bit	If the value is 1234567890, the display of the high word is 1234.5 and the display of the low word is 67890 (in decimal format).
	(Dec low)		
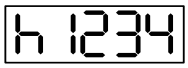	(Hex high)		If the value is 0x12345678, the display of the high word is h1234 and the display of the low word is L5678 (in hexadecimal format).
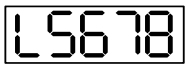	(Hex low)		

The following table shows the panel display for negative values.

Display example	Description
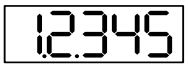	If the value is -12345, the panel displays 1.2.345 (only in decimal format; there is no positive or negative sign for hexadecimal format display).

Note:
1. Dec means the value is displayed in decimal format; Hex means the value is displayed in hexadecimal format.
2. The display shown in the preceding tables is applicable in both Monitoring mode and Editing mode.
3. All monitoring variables are 32-bit data, and the display can be switched to show either the high or low word in either Dec or Hex format. The parameter (Px.xxx) data formats are defined in Chapter 8. Each parameter is displayed in either Dec or Hex format, which cannot be switched.

4.3.6 Display when power is off

Display symbol	Description
	Updating the firmware is not allowed until the display of this symbol is off. For parameters requiring power cycling to have the changes take effect, you can cycle power on the servo drive when the panel displays this symbol.

4.4 General functions

4.4.1 Operation of fault record display

In Parameter mode, select P4.000 - P4.004 and press the SET key to show the corresponding fault records.

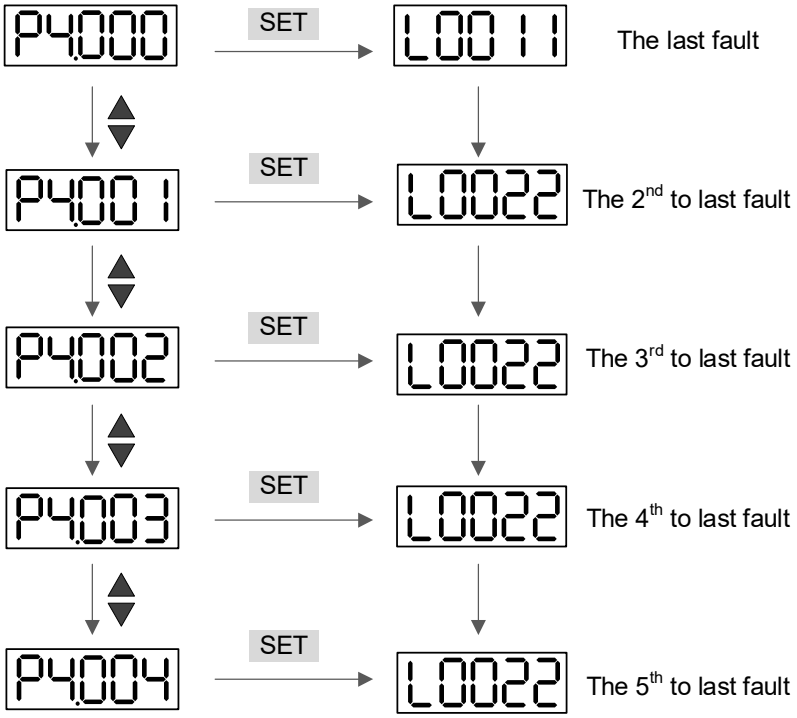

4.4.2 Force DO on

You can switch to the Diagnosis mode by the following steps. Set P2.008 to 406 for enabling the forced DO mode. Then, set the DO by binary method with P4.006. When the value of P4.006 is 0x0002, it forces DO2 on. When the value is 0x0005, it forces DO1 and DO3 on. The mode is volatile; the drive returns to the normal DO mode after power cycling. You can also set P2.008 to 400 to switch to the normal DO mode.

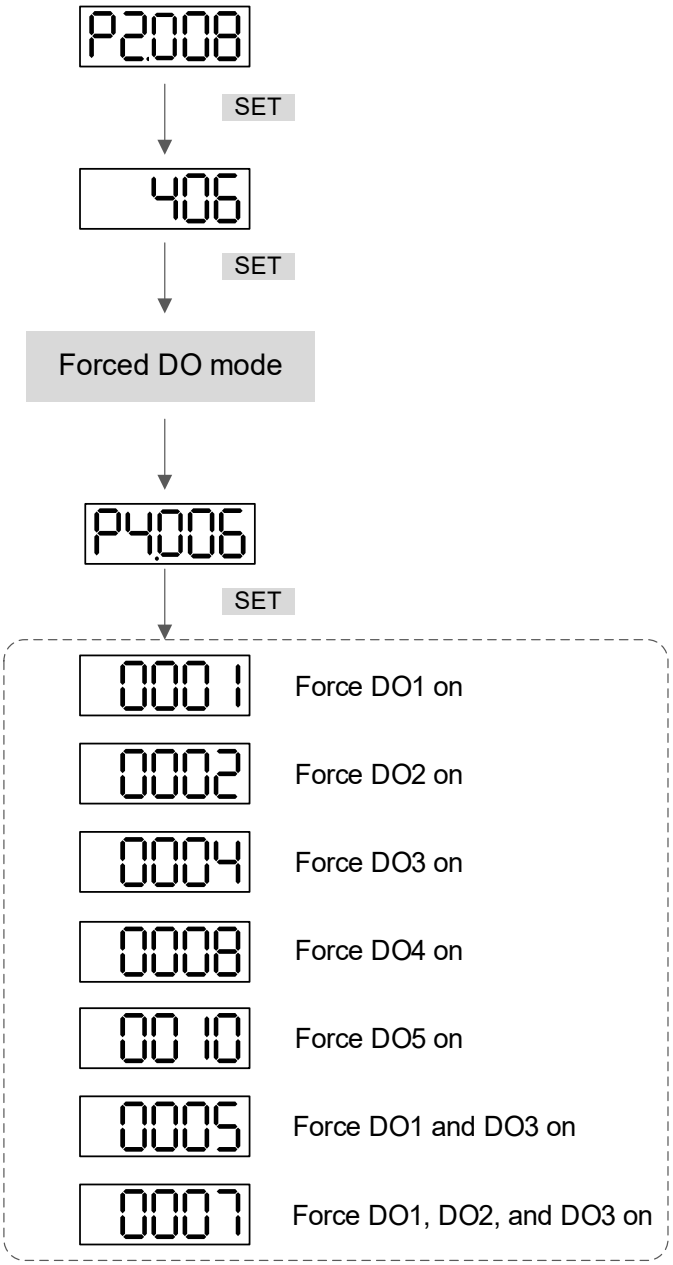

4.4.3 Digital input diagnosis

You can switch to Diagnosis mode by the following steps. When the DIs are triggered by the external signals, the panel shows the corresponding signals. In binary format, when the bit shows 1, it means the DI is on.

For example, if the panel shows “1FE1”, the hexadecimal E equals 1110 in binary format, indicating that DI6 - DI8 are on.

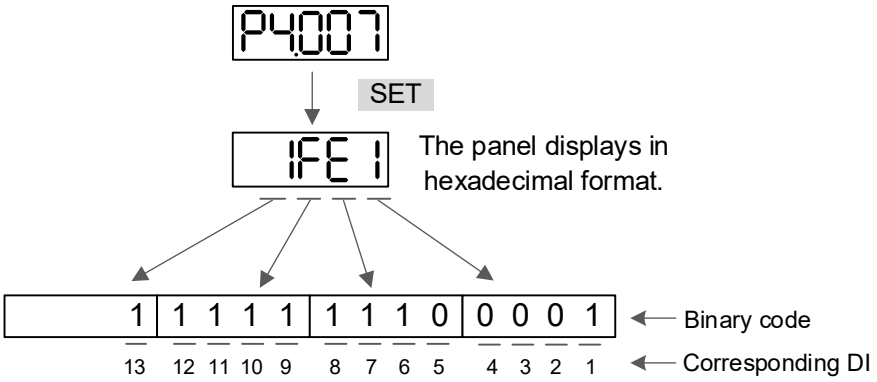

4.4.4 Digital output diagnosis

You can switch to the Diagnosis mode by the following steps. When the DOs are triggered by the output signals, the panel shows the corresponding signals. In binary format, when the bit shows 1, it means the DO is on.

For example, if the panel shows “1F”, the hexadecimal F equals 1111 in binary format, indicating that DO1 - DO4 are on.

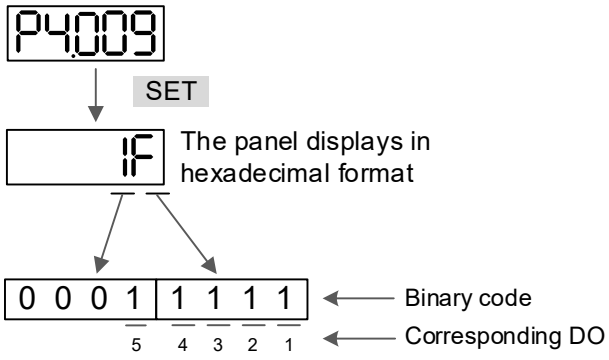

4.5 Testing

This section introduces the testing operations. To avoid danger, make sure to operate the servo motor without load first.

4.5.1 Initial testing

Remove the load from the servo motor, including coupling and accessories on the shaft, to avoid any damage to the servo drive or machine. This prevents the parts on the motor shaft from falling off and possibly causing personal injury or equipment damage during operation.

Caution: to prevent danger, check first if the motor runs normally without load during normal operation. Then, try operating the motor with load.

Check the following items carefully to avoid damage during motor operation.

Inspection before operation (without power)	■ Check for any obvious visible damage on the servo drive. ■ The wires at the wiring terminals should be isolated. ■ Make sure the wiring is correct to avoid damage or any abnormal operation. ■ Check for and remove any conductive objects, including sheet metals and screws, or inflammable objects inside or near the servo drive. ■ Check that the control switch is in the “Off” state. ■ Do not place the servo drive or external regenerative resistor on inflammable objects. ■ To ensure the electromagnetic brake works, check that the emergency stop and circuit breaker functions are working normally. ■ When peripheral devices of the servo drive are subjected to electromagnetic interference, reduce the interference with EMI reduction devices. ■ Make sure the external voltage level of the servo drive is correct.
Inspection during operation (power is applied)	■ Protect the encoder cable from excessive stress. When the motor is running, make sure the cable is not worn or stretched. ■ Contact Delta if the servo motor vibrates or makes unusual noise during operation. ■ Make sure the settings for the parameters are correct. Different machines have different characteristics; adjust the parameters accordingly. ■ Reset the parameters when the servo drive is in the Servo Off state, or it may cause malfunction. ■ If the relay makes abnormal noise or does not make any contact noise when operating, contact Delta. ■ Check that the power indicator and LED display work properly.

4.5.2 Applying power to the servo drive

Follow these instructions.

1. Make sure the wiring between the motor and servo drive is correct.
   (1) Connect the red, white, black, and yellow / green wires to the U, V, W, and FG terminals respectively. If the wiring is incorrect, the motor cannot work properly. The motor ground wire FG must connect to the drive's ground terminal. Refer to Chapter 3 for wiring.
   (2) Correctly connect the motor encoder cable to CN2. If you only want to use the JOG function, connecting to CN1 and CN3 is not necessary. Refer to Chapter 3 for the wiring for CN2.

   Caution: do not connect power to the output terminals (U, V, W) of the servo drive, or it may damage the servo drive.

2. Connect the power circuit of the servo drive.
   Connect power to the servo drive. Refer to the sections of Wiring for power supply in Chapter 3.
3. Turn on the power.
   Apply power to the servo drive.

- When the power is on, the servo drive panel shows:



The default signal settings for the DIs are negative limit (NL), positive limit (PL), and emergency stop (EMGS). If not using the default settings, you must set the values of the corresponding parameters to 0 (disable the DI function) or other values for other functions.

- When P0.002 is set to 7 (motor speed), the servo drive panel shows:

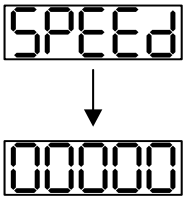

When the panel shows no text, check if the power input voltage is too low.

- When the panel shows:

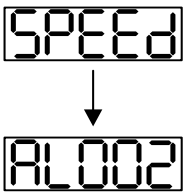

Overvoltage warning:

The input voltage to the main circuit is higher than the allowable rated value or an incorrect power input is applied (incorrect power system).

Corrective action:

1. Use a voltmeter to check if the input voltage to the main circuit is within the allowable rated value.
2. Use a voltmeter to check if the power system complies with the specifications.

- When the panel shows:

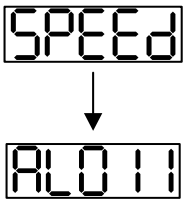

CN2 communication failure warning:

Check if the CN2 connector is securely connected and the wiring is correct.

Corrective action:

1. Make sure the wiring complies with the instructions in the user manual.
2. Check the CN2 connector.
3. Check for loose wiring.
4. Check if the encoder is damaged.

4

- When the panel shows:

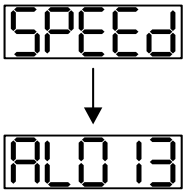

Emergency stop warning:

Check if any of the digital inputs are set to emergency stop (EMGS).

Corrective action:

1. If the emergency stop (EMGS) function is not needed, make sure none of the digital inputs are set to emergency stop (EMGS).
2. If the emergency stop (EMGS) function is needed, make sure the corresponding DI is on when it is preset as normally closed (function code: 0x0021), and then set this DI as normally open (function code: 0x0121).

- When the panel shows:

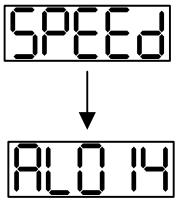

Negative limit error warning:

Check if any of the digital inputs are set to negative limit (NL) and that DI is off.

Corrective action:

1. If the negative limit (NL) function is not needed, make sure none of the digital inputs are set to negative limit (NL).
2. If the negative limit (NL) function is needed, make sure the corresponding DI is on when it is preset as normally closed (function code: 0x0022), and then set this DI as normally open (function code: 0x0122).

- When the panel shows:

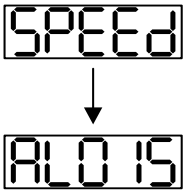

Positive limit error warning:

Check if any of the digital inputs are set to positive limit (PL) and that DI is off.

Corrective action:

1. If the positive limit (PL) function is not needed, make sure none of the digital inputs are set to positive limit (PL).
2. If the positive limit (PL) function is needed, make sure the corresponding DI is on when it is preset as normally closed (function code: 0x0023), and then set this DI as normally open (function code: 0x0123).

- When the panel shows:



Overcurrent warning:

Corrective action:

1. Check the connection between the motor and servo drive.
2. Check if the wire is short-circuited. Fix the short circuit and make sure the metal conductor is not exposed.

- When the panel shows:



Undervoltage warning:

Corrective action:

1. Check if the wiring of input voltage to the main circuit is correct.
2. Use a voltmeter to check the main circuit voltage.
3. Use a voltmeter to check if the power system complies with the specifications.

Note: during power-on or in the Servo On state (without any commands issued), if an alarm occurs or any abnormal display appears, contact the distributor.

4.5.3 JOG trial run without load

It is easy to test the motor and servo drive using a JOG trial run without load since no extra wiring is needed. For safety reasons, it is recommended that you set low JOG speed. Follow these steps:

Step 1: JOG trial run is available only when the servo drive is in the Servo On state. The drive can be forced into the Servo On state by setting P2.030 to 1 or with the controller.

Step 2: set the JOG speed (unit: rpm) with P4.005. Press the SET key to display the JOG speed. The default value is 20 rpm.

Step 3: press the ▲ or ▼ key to adjust the JOG speed. In the following example, the speed is set to 100 rpm.

Step 4: press the SET key to save the setting value, and then the panel displays “JOG” and enters JOG mode.

Step 5: press the MODE key to exit JOG mode after completing the trial run.

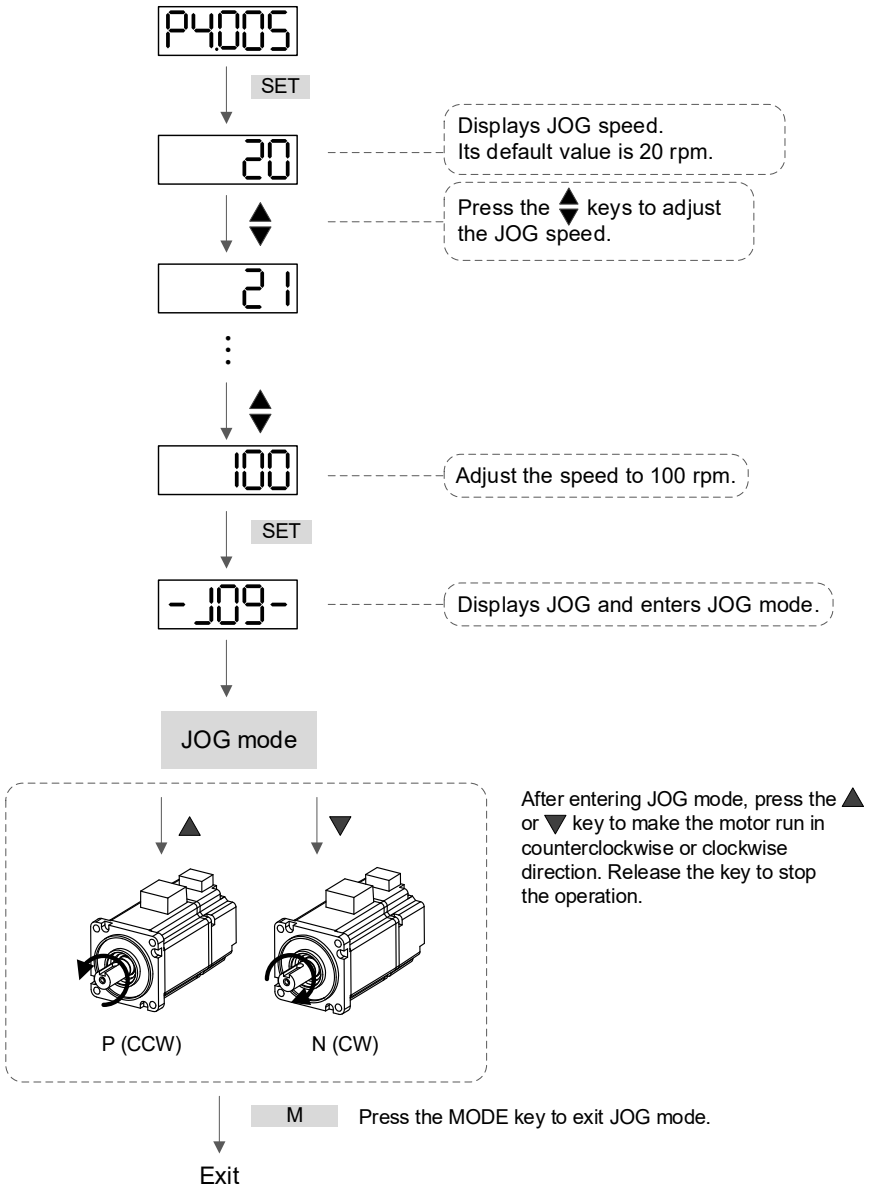

The following shows the JOG timing diagram:

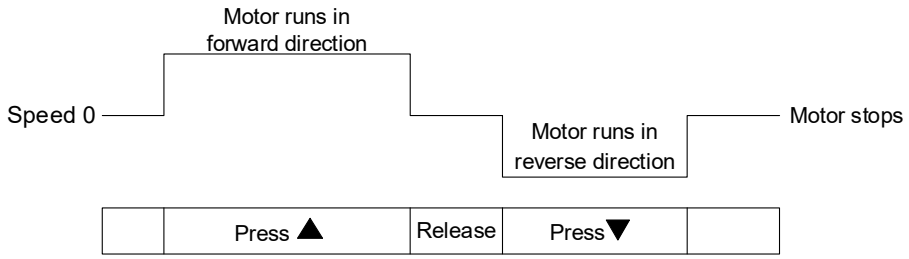

If the motor does not run, check if the UVW cable and encoder cable are correctly wired.

If the motor runs abnormally, check if the UVW phase sequence is correct.

4.5.4 Trial run without load (Speed mode)

Before starting the trial run without load, firmly secure the motor base to avoid any danger caused by counterforce generated during motor rotation.

Step 1: set P1.001.YX to 02 to set the control mode of the servo drive to Speed (S) mode. Then cycle power on the servo drive to update the control mode.

Step 2: in S mode, set the digital inputs according to the following table for the trial run.

Digital input	Parameter setting value	DI name	Function description	CN1 Pin No.
DI1	P2.010 = 0x0101	SON	Servo On	DI1- = 9
DI2	P2.011 = 0x0109	TRQLM	Torque limit	DI2- = 10
DI3	P2.012 = 0x0114	SPD0	Speed selection 0	DI3- = 34
DI4	P2.013 = 0x0115	SPD1	Speed selection 1	DI4- = 8
DI5	P2.014 = 0x0102	ARST	Alarm reset	DI5- = 33
DI6	P2.015 = 0x0000	-	DI disabled	-
DI7	P2.016 = 0x0000	-	DI disabled	-
DI8	P2.017 = 0x0000	-	DI disabled	-
DI9	P2.036 = 0x0000	-	DI disabled	-
DI10	P2.037 = 0x0000	-	DI disabled	-
DI11	P2.038 = 0x0000	-	DI disabled	-
DI12	P2.039 = 0x0000	-	DI disabled	-
DI13	P2.040 = 0x0000	-	DI disabled	-

You can program the digital inputs of Delta's servo drive by referring to Table 8.1 Digital input (DI) descriptions in Chapter 8.

The default setting includes the negative limit, positive limit, and emergency stop functions. Therefore, if any alarm occurs after you complete the preceding settings, cycle power on the servo drive or set DI5 to On to clear the alarm. Refer to Section 4.5.2.

The Speed command selection is determined by SPD0 and SPD1. See the following table.

Speed command number	DI signal of CN1		Command source			Content
	SPD1	SPD0				
S1	0	0	Mode	S	External analog signal	Voltage difference between V_REF and GND
				Sz	N/A	Speed command is 0
S2	0	1	Internal register parameter			P1.009
S3	1	0				P1.010
S4	1	1				P1.011

0 means the DI is off (the circuit is open).

1 means the DI is on (the circuit is closed).

Rotation speed = parameter setting value x unit (0.1 rpm).

For example, P1.009 = +30000, and the rotation speed = +30000 x 0.1 rpm = +3000 rpm.

Command setting for the speed register:

Set P1.009 to +30000.

Set P1.010 to +1000.

Set P1.011 to -30000.

Motor's rotation direction:

Input command	Rotation direction
+	CCW (forward direction)
-	CW (reverse direction)

Step 3:

1. Switch on DI1 (Servo On).
2. When both DI3 (SPD0) and DI4 (SPD1) are off, that means the drive executes the S1 command. The motor rotates according to the analog voltage command.
3. When DI3 (SPD0) is on, that means the drive executes the S2 command. The rotation speed is +3000 rpm.
4. When DI4 (SPD1) is on, that means the drive executes the S3 command. The rotation speed is +100 rpm.
5. When both DI3 (SPD0) and DI4 (SPD1) are on, that means the drive executes the S4 command. The rotation speed is -3000 rpm.
6. You can repeatedly execute items 3 to 5.
7. If you want to stop the motor, switch off DI1 (Servo Off).

4.5.5 Trial run without load (Position mode)

Before starting the trial run without load, firmly secure the motor base to avoid any danger caused by counterforce generated during motor rotation.

Step 1: set P1.001.YX to 01 to set the control mode of the servo drive to Position (PR) mode. Then cycle power on the servo drive to update the control mode.

Step 2: in PR mode, set the digital inputs according to the following table for the trial run.

Digital input	Parameter setting value	DI name	Function description	CN1 Pin No.
DI1	P2.010 = 0x0101	SON	Servo On	DI1- = 9
DI2	P2.011 = 0x0108	CTRG	Command triggered	DI2- = 10
DI3	P2.012 = 0x0111	POS0	Position selection 0	DI3- = 34
DI4	P2.013 = 0x0112	POS1	Position selection 1	DI4- = 8
DI5	P2.014 = 0x0102	ARST	Alarm reset	DI5- = 33
DI6	P2.015 = 0x0000	-	DI disabled	-
DI7	P2.016 = 0x0000	-	DI disabled	-
DI8	P2.017 = 0x0000	-	DI disabled	-
DI9	P2.036 = 0x0000	-	DI disabled	-
DI10	P2.037 = 0x0000	-	DI disabled	-
DI11	P2.038 = 0x0000	-	DI disabled	-
DI12	P2.039 = 0x0000	-	DI disabled	-
DI13	P2.040 = 0x0000	-	DI disabled	-

You can program the digital inputs of Delta's servo drive by referring to Table 8.1 Digital input (DI) descriptions in Chapter 8.

The default setting includes the negative limit, positive limit, and emergency stop functions. Therefore, if any alarm occurs after you complete the preceding settings, cycle power on the servo drive or set DI5 to On to clear the alarm. Refer to Section 4.5.2.

4

See the following table for the 64 sets of PR and the corresponding Position commands (POS0 - POS5) and parameters.

Position command	POS5	POS4	POS3	POS2	POS1	POS0	CTRG	Corresponding parameter
Homing	0	0	0	0	0	0	↑	P6.000
								P6.001
PR#01	0	0	0	0	0	1	↑	P6.002
								P6.003
…								…
PR#50	1	1	0	0	1	0	↑	P6.098
								P6.099
PR#51	1	1	0	0	1	1	↑	P7.000
								P7.001
…								…
PR#63	1	1	1	1	1	1	↑	P7.026
								P7.027

0 means the DI is Off (the circuit is open).

1 means the DI is On (the circuit is closed).

You can set the 64 sets of PR (P6.000 - P7.027), which you can also set for absolute position commands.

Tuning

5

This chapter provides the tuning procedures and descriptions for the gain adjustment modes. Apart from Auto and Semi-auto modes, advanced users can also use Manual mode for tuning.

5.1 Tuning procedure and modes ····· 5-2
5.1.1 Tuning flowchart ····· 5-2
5.1.2 Flowchart of initial inertia estimation when connecting to a machine ····· 5-3
5.1.3 Tuning flowchart of Auto mode ····· 5-4
5.1.4 Tuning flowchart of Semi-auto mode ····· 5-5
5.1.5 Limitations on load inertia estimation ····· 5-6
5.1.6 Dealing with the mechanical resonance ····· 5-7
5.2 Differences between gain adjustment modes ····· 5-9
5.3 Manual tuning of gain parameters ····· 5-10

5.1 Tuning procedure and modes

5.1.1 Tuning flowchart

5

You can tune the servo drive by following this flowchart. First, start from Auto mode. If you are not satisfied with the tuning results, use Semi-auto mode and then Manual mode to meet the requirements.

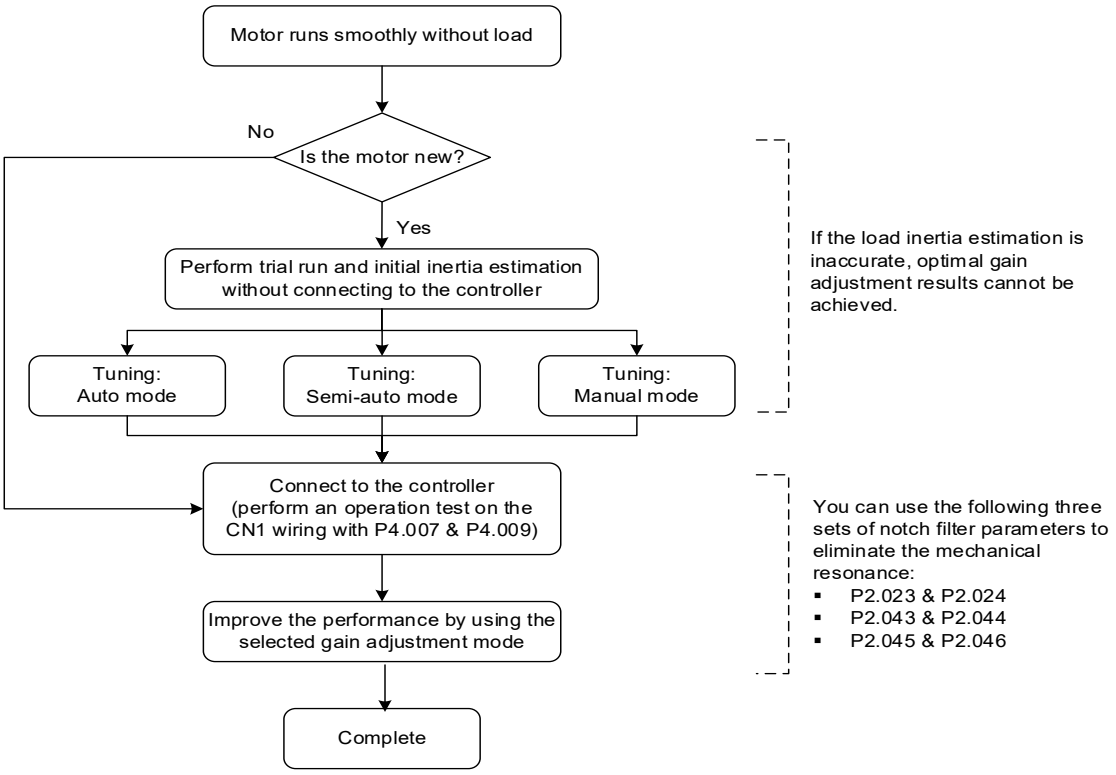

5.1.2 Flowchart of initial inertia estimation when connecting to a machine

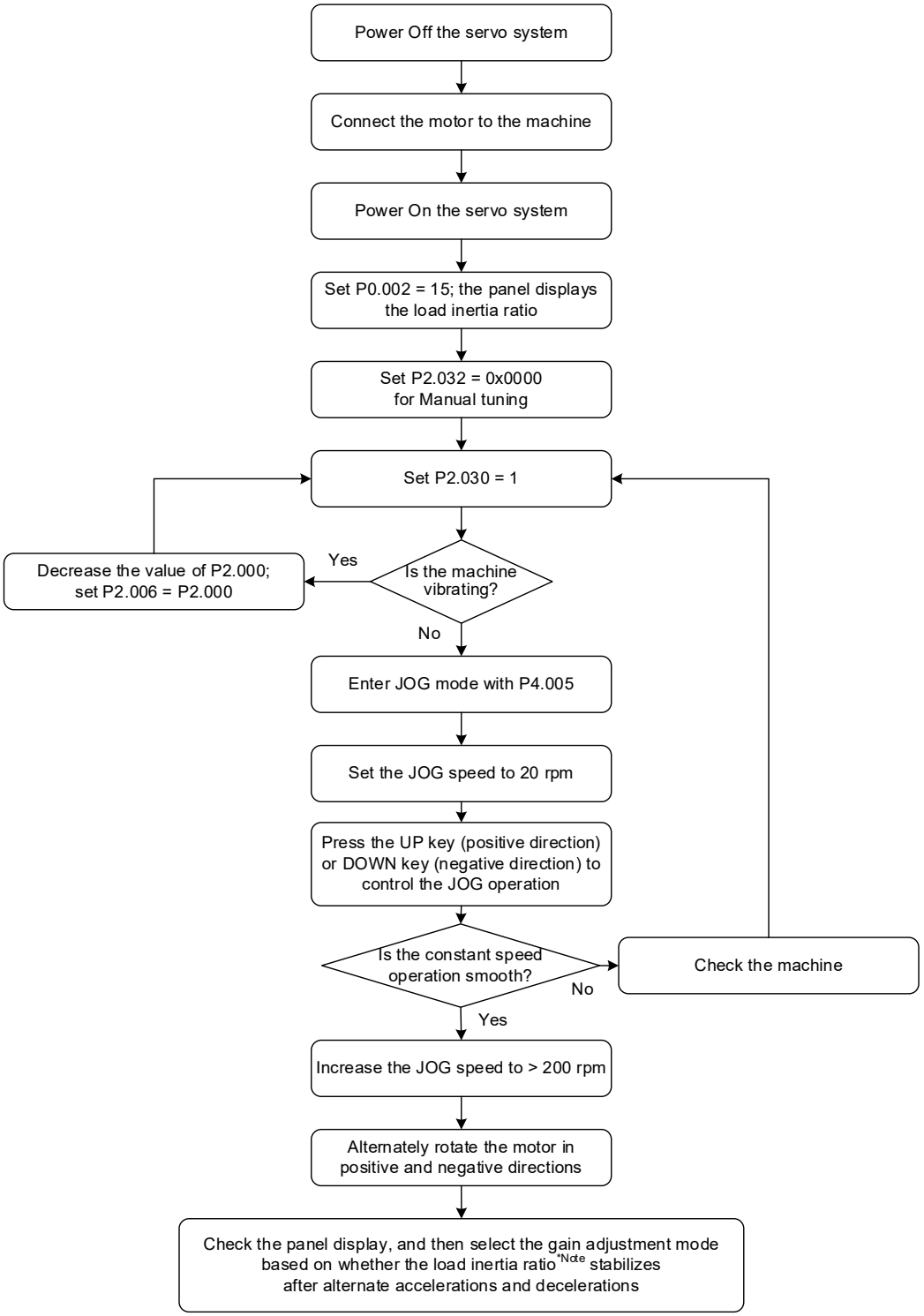

Note: the load inertia ratio is not displayed after you have entered JOG mode with P4.005; press the MODE key twice consecutively to view it. To execute JOG operation again, press the MODE key → SET key → SET key.

5

5.1.3 Tuning flowchart of Auto mode

Set P2.032 = 0x0001 to enter the Auto mode. In this mode, the servo drive continuously estimates the system inertia and updates the load inertia ratio to P1.037 every 30 minutes, and then adjusts the parameters P2.000, P2.004, P2.006, P2.025, P2.026, and P2.049 according to the P2.031 setting value.

The stiffness corresponding to different P2.031 settings are as follows:

P2.031 setting value (Hz)	Stiffness and response
1 to 50	Low stiffness and low response
51 to 250	Medium stiffness and medium response
251 to 850	High stiffness and high response
851 to 1000	Ultra-high stiffness and ultra-high response

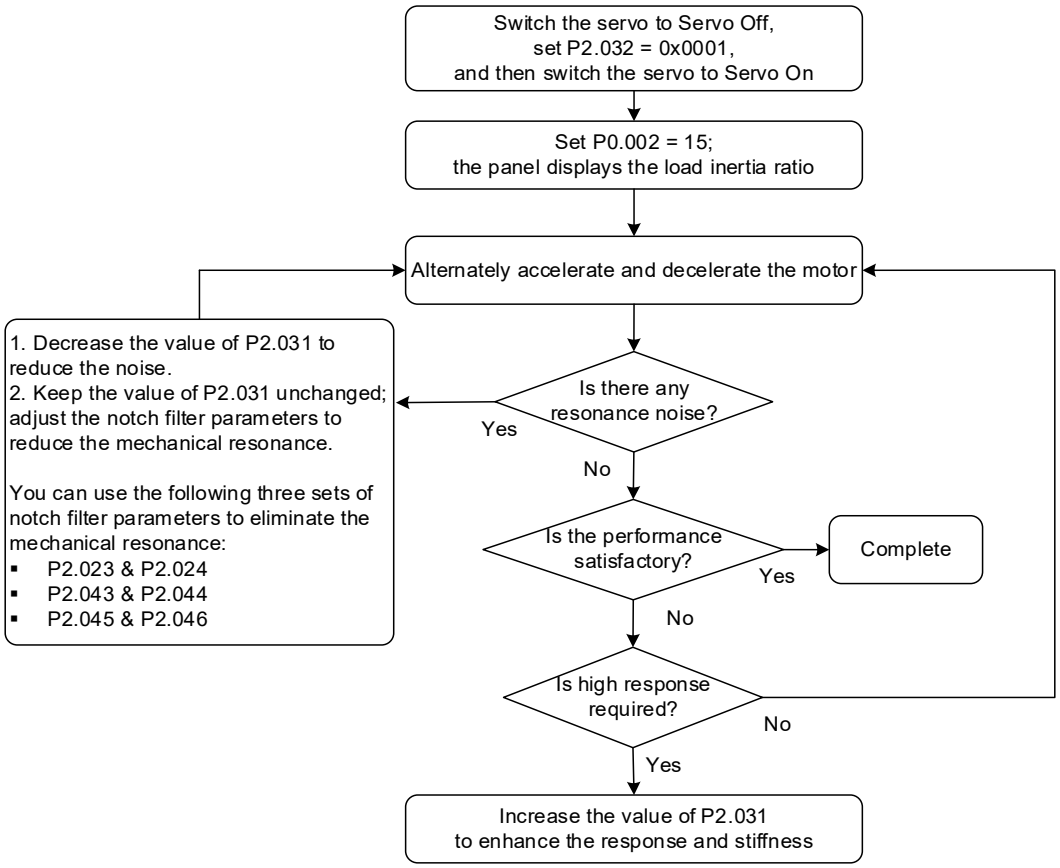

5.1.4 Tuning flowchart of Semi-auto mode

Set P2.032 = 0x0002 to enter the Semi-auto mode. In this mode, inertia estimation is stopped after the system inertia becomes stable. Then, the system updates the estimated load inertia ratio to P1.037.

When the mode is switched from Manual or Auto to Semi-auto (P2.032 = 0x0000 → 0x0002 or 0x0001 → 0x0002), the servo drive restarts the inertia estimation, and then adjusts the parameters P2.000, P2.004, P2.006, P2.025, P2.026, and P2.049 according to the P2.031 setting value.

The stiffness corresponding to different P2.031 settings are as follows:

P2.031 setting value (Hz)	Stiffness and response
1 to 50	Low stiffness and low response
51 to 250	Medium stiffness and medium response
251 to 850	High stiffness and high response
851 to 1000	Ultra-high stiffness and ultra-high response

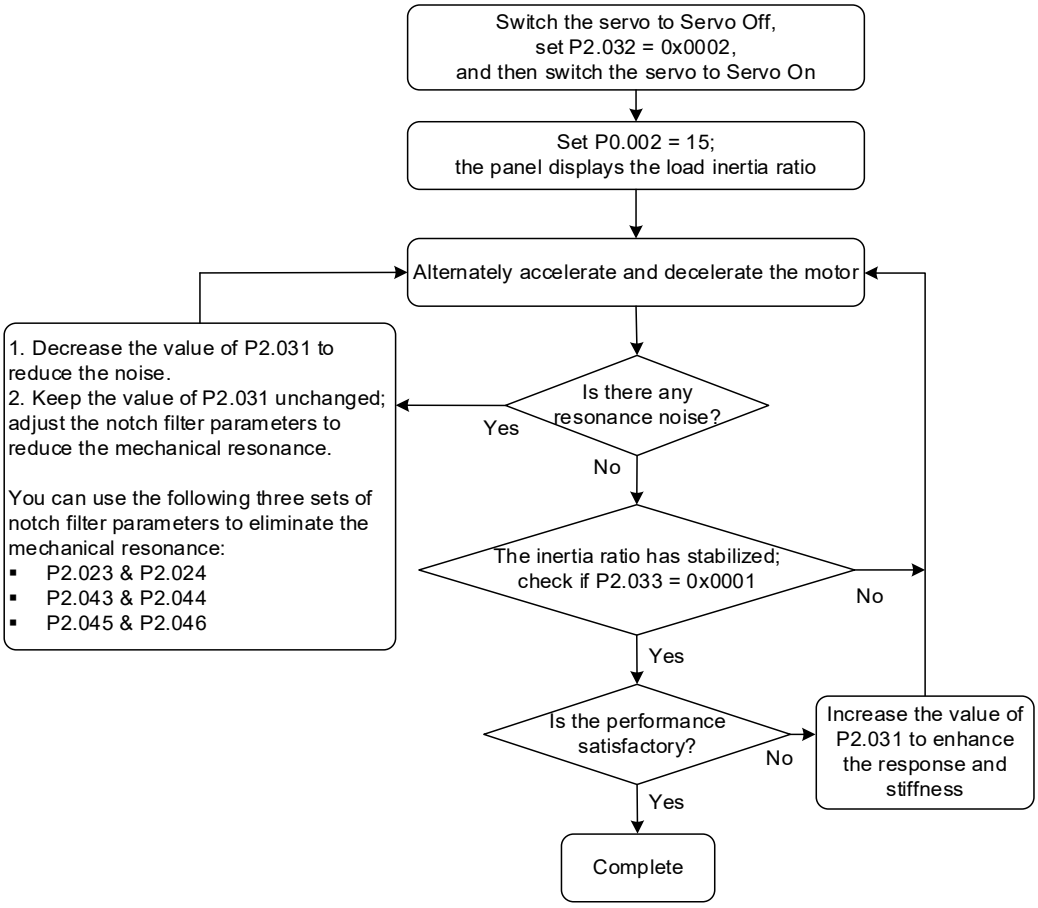

Note:
1. When P2.033 = 0x0001, the inertia estimation in Semi-auto mode is complete, and you can read P1.037 to get the load inertia ratio.
2. If you set P2.033 = 0x0000, the inertia estimation will restart.

5.1.5 Limitations on load inertia estimation

- The acceleration time from 0 rpm to 2,000 rpm or deceleration time from 2,000 rpm to 0 rpm should be 1 second and below. The motor speed should be 200 rpm and above.
- The load inertia should be 50 times or less the motor inertia.
- The external force or inertia ratio should not change drastically.

In Auto mode, the servo drive automatically updates the load inertia ratio to P1.037 every 30 minutes.

In Semi-auto mode, inertia estimation is stopped after the system has run for a while and the inertia has become stable (refer to the following flowchart). Then, the system automatically updates the estimated inertia ratio to P1.037.

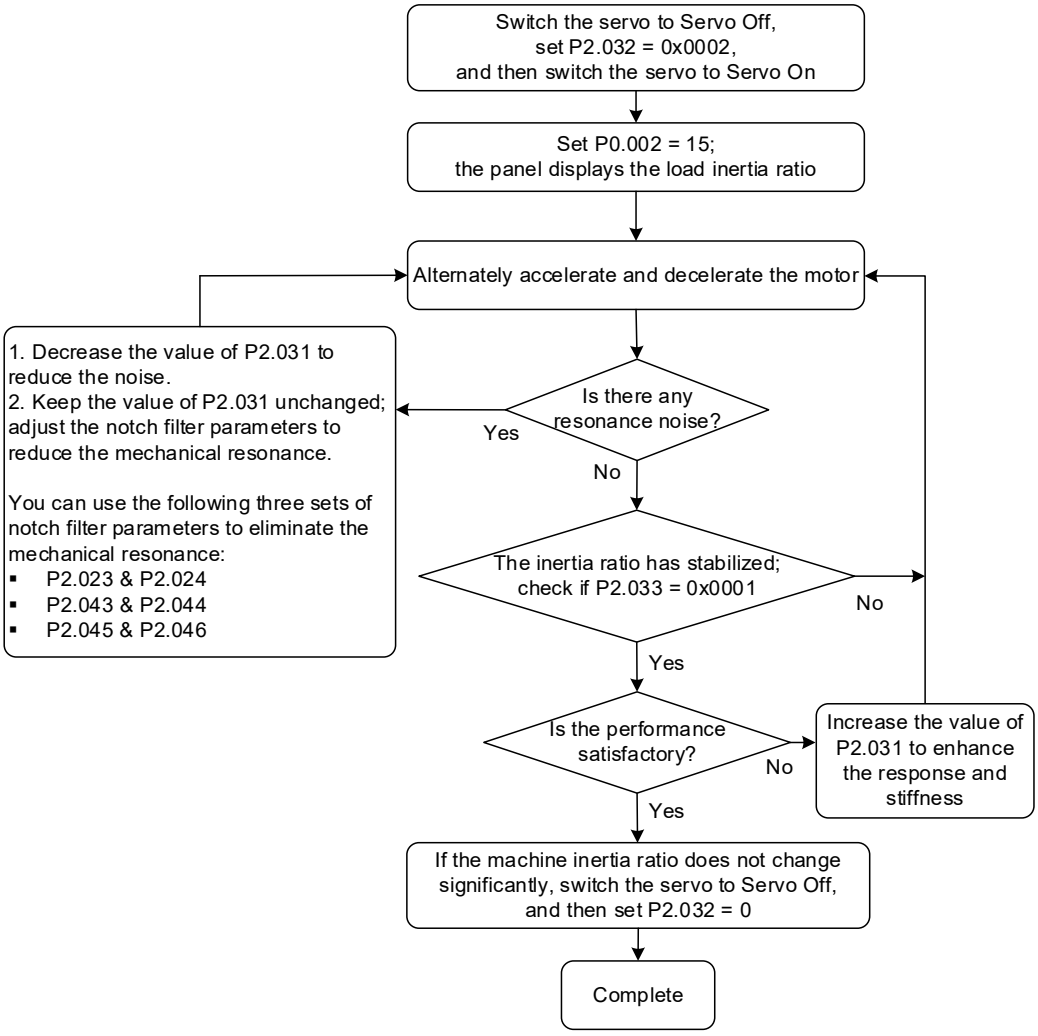

5.1.6 Dealing with the mechanical resonance

The servo provides three sets of notch filters for high-frequency mechanical resonance suppression. Two sets of the notch filters support the function of auto resonance suppression (P2.047). In addition, you can suppress the resonance manually.

Flowchart of manual resonance suppression:

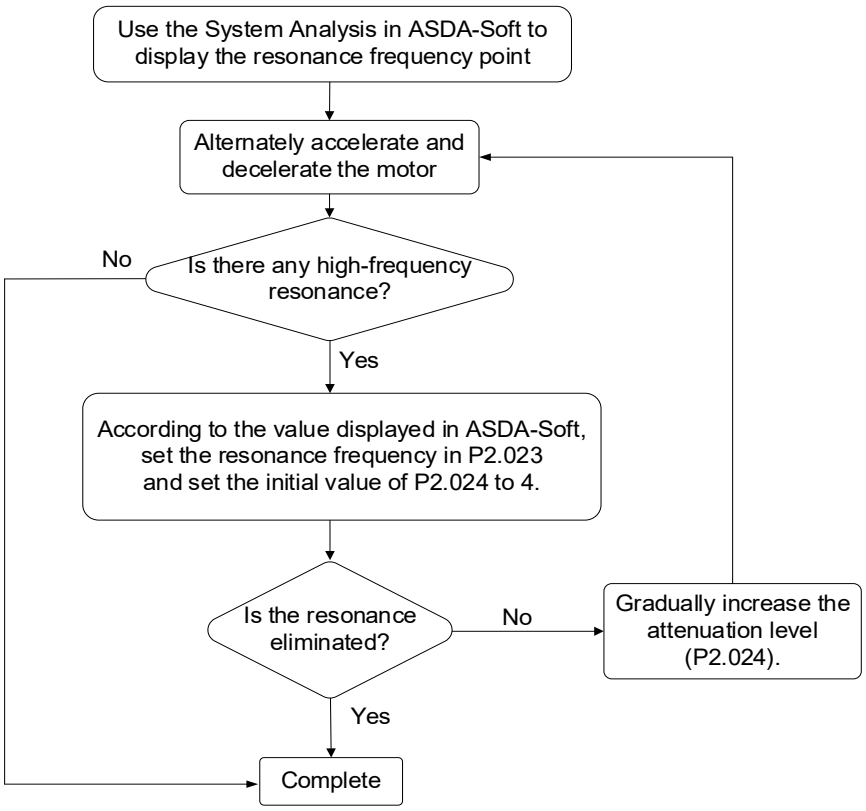

5

Flowchart of auto resonance suppression:

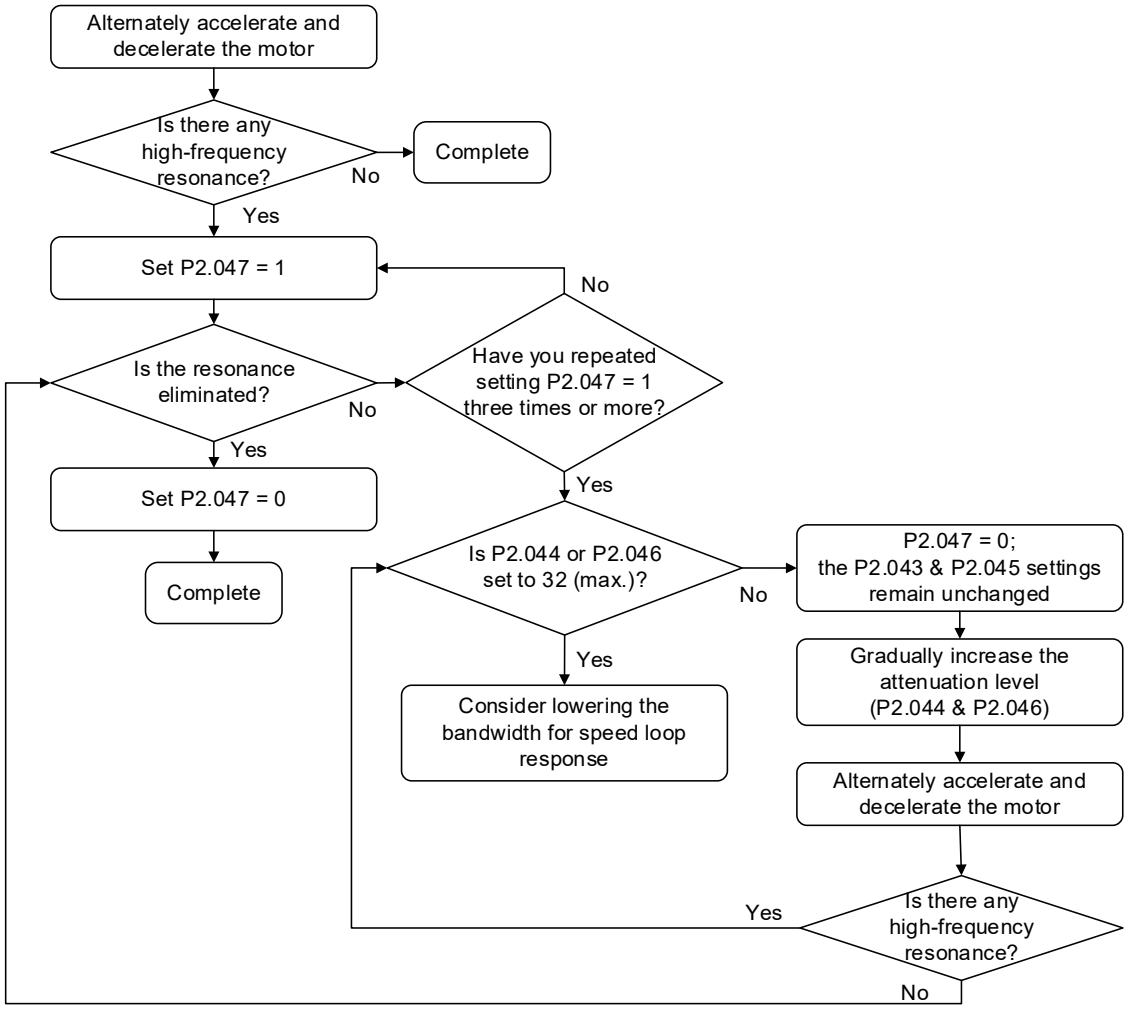

Note:

1. P2.044 and P2.046 are attenuation level settings. If you have set the attenuation level to the maximum and the resonance still cannot be reduced, lower the bandwidth for speed loop response.
2. After setting P2.047 = 1, check the P2.044 and P2.046 settings.
   When P2.044 = non-zero, it means there is one resonance point in the system, and reading P2.043 obtains the resonance frequency.
   When there is another resonance point in the system, P2.046 = non-zero and reading P2.045 obtains the resonance frequency.
3. If the resonance persists after you have repeated setting P2.047 = 1 three times or more, then manually adjust the resonance suppression settings.

5.2 Differences between gain adjustment modes

P2.032 setting value	Gain adjustment mode	Inertia estimation	Parameter	
			Manual	Auto
0x0000 (default)	Manual	Fixed set value of P1.037	P1.037 P2.000 P2.004 P2.006 P2.025 P2.026	N/A
0x0001	Auto	Continuous adjustment (every 30 minutes)	P2.031	P1.037 P2.000 P2.004 P2.006 P2.025 P2.026 P2.049
0x0002	Semi-auto	Non-continuous adjustment (stops after the system has run for a while and the inertia has become stable)	P2.031	P1.037 P2.000 P2.004 P2.006 P2.025 P2.026 P2.049

When the mode is switched from Auto or Semi-auto to Manual (P2.032 = 0x0001 → 0x0000 or 0x0002 → 0x0000), the system automatically saves the settings of parameters P1.037, P2.000, P2.004, P2.006, P2.025, P2.026, and P2.049 at present.

5.3 Manual tuning of gain parameters

The position or speed loop response bandwidth is determined by the mechanical stiffness and the application. Generally, for applications or machines that require high-speed positioning and high precision, higher response bandwidth is required. However, increasing the response bandwidth is likely to cause mechanical resonance. Thus, a machine with higher stiffness is used to solve this problem. When the allowable response bandwidth of the machine is unknown, you can gradually increase the gain parameter values to increase the response bandwidth until hearing the sound of the resonance. Then, decrease the gain parameter values. The following are the descriptions of the gain adjustment parameters.

- P2.000 Position proportional gain (KPP)

  This parameter determines the response of the position loop. The bigger the KPP value, the higher the response bandwidth of the position loop. This lowers the following error and position error, and shortens the settling time. However, if you set the value too high, it can cause machine jitter or cause overshoot when positioning. The calculation of position loop response bandwidth is as follows:

$$\text{Position loop response bandwidth (Hz)} = \frac{KPP}{2\pi}$$

- P2.004 Speed proportional gain (KVP)

  This parameter determines the response of the speed loop. The bigger the KVP value, the higher the response bandwidth of the speed loop and the lower the following error. However, if you set the value too high, it is likely to cause mechanical resonance. The speed loop response bandwidth must be 4 to 6 times the position loop response bandwidth. If the position loop response bandwidth is higher than the speed loop response bandwidth, it can cause machine jitter or cause overshoot when positioning. The calculation of speed loop response bandwidth is as follows:

$$\text{Speed loop response bandwidth (Hz)} = \left(\frac{KVP}{2\pi}\right) \times \left[\frac{(1 + P1.037 / 10)}{(1 + JL / JM)}\right]$$

  JM: motor inertia; JL: load inertia

  When P1.037 (auto estimated or manually set value) is equal to the actual load inertia ratio (JL / JM), the actual speed loop response bandwidth is:

$$\text{Speed loop response bandwidth (Hz)} = \left(\frac{KVP}{2\pi}\right)$$

- P2.006 Speed integral compensation (KVI)

  The higher the KVI value, the better the elimination of the deviation. However, if you set the value too high, it can cause machine jitter. It is advisable to set the value as follows:

$$KVI \le 1.5 \times \text{Speed loop response bandwidth (Hz)}$$

- P2.025 Resonance suppression low-pass filter (NLP)

  A high load inertia ratio reduces the speed loop response bandwidth. Therefore, you must increase the KVP value to maintain the speed loop response bandwidth. Increasing the KVP value might cause mechanical resonance. Use this parameter to eliminate the noise. The higher the value, the better the capability of reducing high-frequency noise. However, if you set the value too high, it can cause instability in the speed loop and overshoot. It is advisable to set the value as follows:

$$NLP \leq \frac{10000}{6 \times \text{Speed loop response bandwidth (Hz)}}$$

- P2.026 Anti-interference gain (DST)

  This parameter increases the ability to resist external force and reduces overshoot during acceleration / deceleration. The default value is 0. Adjusting this value in Manual mode is not suggested unless it is for fine-tuning the results of Auto mode.

- P2.002 Position feed forward gain (PFG)

  This parameter reduces the position error and shortens the settling time. However, if you set the value too high, it might cause overshoot when positioning. When the E-Gear ratio setting is greater than 10, noise is likely to occur.

(This page is intentionally left blank.)

Control Mode 6

This chapter describes the control structure of each mode, including the usage of gain adjustment and filters. For Position mode, you can use the external pulse and commands from the internal registers. For Speed mode and Torque mode, apart from the commands from the internal registers, you can also control the servo drive by the external analog voltage input. In addition to the single modes, dual mode and multiple modes are also available for meeting the application requirements.

6.1 Selecting the control mode ····· 6-3
6.2 Position mode ····· 6-4
6.2.1 Position command in PT mode ····· 6-4
6.2.2 Position command in PR mode ····· 6-5
6.2.3 Control structure of Position mode ····· 6-6
6.2.4 S-curve filter for Position commands ····· 6-7
6.2.5 Electronic gear ratio (E-Gear ratio) ····· 6-8
6.2.6 Low-pass filter ····· 6-9
6.2.7 Timing diagram of PR mode ····· 6-9
6.2.8 Gain adjustment of the position loop ····· 6-10
6.2.9 Low-frequency vibration suppression in Position mode ····· 6-12
6.3 Speed mode ····· 6-15
6.3.1 Selecting the Speed command source ····· 6-15
6.3.2 Control structure of Speed mode ····· 6-16
6.3.3 Smoothing the Speed command ····· 6-17
6.3.4 Scaling of the analog command ····· 6-19
6.3.5 Timing diagram of Speed mode ····· 6-20
6.3.6 Gain adjustment of the speed loop ····· 6-21
6.3.7 Resonance suppression unit ····· 6-23
6.4 Torque mode ····· 6-25
6.4.1 Selecting the Torque command source ····· 6-25
6.4.2 Control structure of Torque mode ····· 6-26
6.4.3 Smoothing the Torque command ····· 6-26
6.4.4 Scaling of the analog command ····· 6-27
6.4.5 Timing diagram of Torque mode ····· 6-27
6.5 Dual-mode and multi-mode operations ····· 6-28
6.5.1 Speed-Position dual mode ····· 6-29

6.5.2 Speed-Torque dual mode ····· 6-30
6.5.3 Torque-Position dual mode ····· 6-31
6.6 Others ····· 6-32
6.6.1 Applying the speed limit ····· 6-32
6.6.2 Applying the torque limit ····· 6-32
6.6.3 Analog monitoring ····· 6-33

6

6.1 Selecting the control mode

This servo drive provides three basic control modes, Position, Speed, and Torque modes. You can perform single-mode, dual-mode, or multi-mode control with the basic control modes The following table lists all the available modes and corresponding descriptions.

Mode		Short name	Code	Description
Single mode	Position mode (Terminal block input)	PT	00	The servo drive receives the Position command and controls the motor to move to the target position. The Position command is input from the external terminal block and the signal type is pulse.
	Position mode (Internal register)	PR	01	The servo drive receives the Position command and controls the motor to move to the target position. The Position command is issued from the internal registers (64 sets in total). Select the register number with DI signals or through communication.
	Speed mode	S	02	The servo drive receives the Speed command and controls the motor to reach the target speed. The Speed command is issued from the internal registers (3 sets in total) or by analog voltage input (-10V to +10V) from the external terminal block. Select the command with DI signals.
	Speed mode (No analog input)	Sz	04	The servo drive receives the Speed command and controls the motor to reach the target speed. The Speed command can only be issued from the internal registers (3 sets in total) instead of from the external terminal block. Select the command with DI signals.
	Torque mode	T	03	The servo drive receives the Torque command and controls the motor to reach the target torque. The Torque command is issued from the internal registers (3 sets in total) or by analog voltage input (-10V to +10V) from the external terminal block. Select the command with DI signals.
	Torque mode (No analog input)	Tz	05	The servo drive receives the Torque command and controls the motor to reach the target torque. The Torque command can only be issued from the internal registers (3 sets in total) instead of from the external terminal block. Select the command with DI signals.
Dual mode		S-PT	06	Switch between S and PT modes with DI signal.
		T-PT	07	Switch between T and PT modes with DI signal.
		S-PR	08	Switch between S and PR modes with DI signal.
		T-PR	09	Switch between T and PR modes with DI signal.
		S-T	0A	Switch between S and T modes with DI signal.
		PT-PR	0D	Switch between PT and PR modes with DI signal.
Multiple modes		PT-PR-S	0E	Switch between PT, PR, and S modes with DI signals.
		PT-PR-T	0F	Switch between PT, PR, and T modes with DI signals.

Here are the steps to switch the control modes:

1. Switch the servo drive to the Servo Off state. You can do this by setting DI.SON to Off.
2. Input the corresponding code into P1.001 to set the control mode by referring to the preceding table.
3. After setting P1.001, cycle power on the servo drive.

The following sections describe the operation of each single mode, including the control structure, command source and selection, command processing, and gain adjustment.

6.2 Position mode

The servo drive can receive two types of position control commands: external pulse (PT mode) and internal register (PR mode).

6

In PT mode, the servo drive receives the pulse command for the moving direction (motor runs forward or reverse). The input pulse controls the rotation angle of the motor. The servo drive can receive pulse commands of up to 4 Mpps.

In PR mode, the internal registers allow you to accomplish position control without the external pulse command. The servo drive provides 64 sets of command registers. Set the required registers first before switching the drive to the Servo On state. There are two ways to select the commands. One is setting DI.POS0 - DI.POS5 of CN1, and the other is directly setting the register values through communication.

6.2.1 Position command in PT mode

The PT position command source is the pulse input from the terminal block. You can use P1.000 to set the pulse type (CW/CCW pulse, pulse train + sign, or A phase + B phase) and logic type (positive or negative). Refer to Chapter 8 for details.

Parameter	Function
P1.000	External pulse input type

6.2.2 Position command in PR mode

The PR position command source is the 64 sets of internal registers (P6.000 - P7.027). Use DI.POS0 - POS5 (0x11, 0x12, 0x13, 0x1A, 0x1B, 0x1C) of CN1 to select one of the 64 sets as the Position command and then trigger the command with DI.CTRG (0x08). See the following table for details.

Position command	POS5	POS4	POS3	POS2	POS1	POS0	CTRG	Corresponding parameter
Homing	0	0	0	0	0	0	↑	P6.000
								P6.001
PR#01	0	0	0	0	0	1	↑	P6.002
								P6.003
…								…
PR#50	1	1	0	0	1	0	↑	P6.098
								P6.099
PR#51	1	1	0	0	1	1	↑	P7.000
								P7.001
…								…
PR#63	1	1	1	1	1	1	↑	P7.026
								P7.027

Status of POS0 - POS5: 0 means the DI is Off (the circuit is open); 1 means the DI is On (the circuit is closed).

CTRG↑: this indicates the moment the DI is switched from Off to On.

The absolute type and incremental type position registers are used to control the operation process. You can easily complete a periodic motor operation according to the preceding table. For example, if the Position command PR#01 is 10 turns and PR#02 is 20 turns, when PR#01 is issued first and PR#02 comes second, the difference between absolute and incremental positioning is shown in the following diagrams.

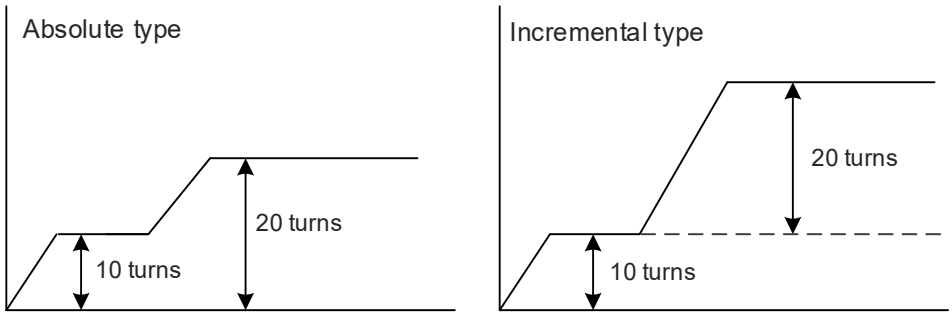

6

6.2.3 Control structure of Position mode

The following diagram shows the basic control structure of Position mode.

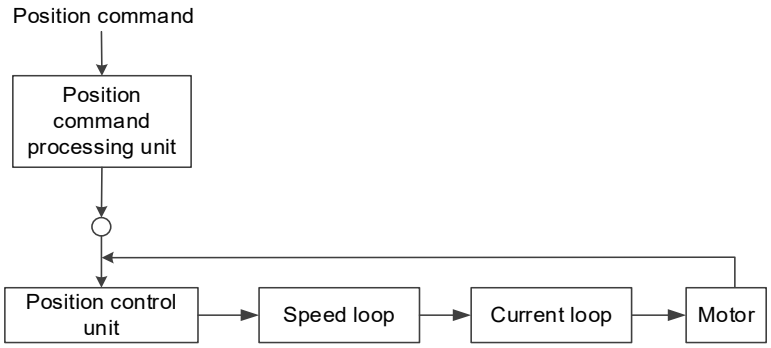

For better control, the pulse signals are processed by the Position command processing unit first. The structure is shown in the following diagram.

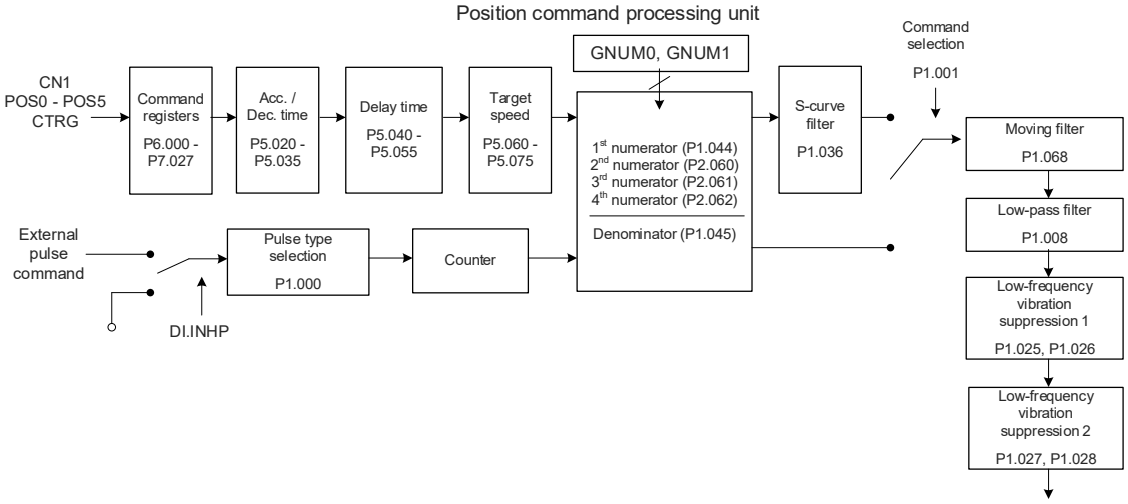

In the diagram, the upper path is PR mode and the lower one is PT mode, which you can select with P1.001. You can set the E-Gear ratio in both modes to adjust the positioning resolution. In addition, you can use either a moving filter or a low-pass filter to smooth the command. Refer to the following sections for details.

The Pulse Command Input Inhibit (INHP) function

In PT mode, when DI.INHP is On, the servo drive stops receiving external pulse commands and the motor stops running. As this function is only supported by P2.017 (DI8 functional planning), setting P2.017 to 0x45 (DI.INHP) is required.

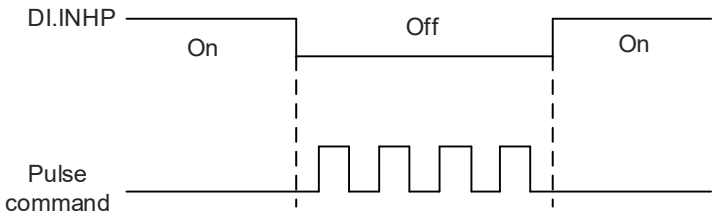

6.2.4 S-curve filter for Position commands

The S-curve filter for Position commands smooths the motion command in PR mode. The filter makes the speed and acceleration continuous and reduces jerks, resulting in a smoother mechanical operation. If the load inertia increases, the motor operation is affected by friction and inertia when the motor starts or stops rotating. Setting a higher value for P1.036 (S-curve acceleration / deceleration smoothing constant) and adjusting the settings for P5.020 - P5.035 (Acceleration / deceleration time) can increase the smoothness of operation. When the Position command source is the pulse input, the speed and angular acceleration are continuous, so the S-curve filter is not necessary.

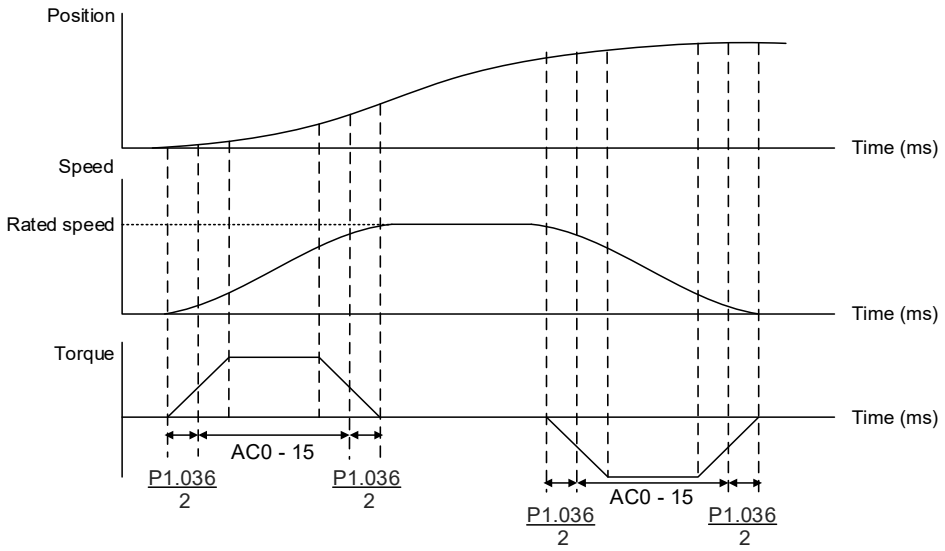

S-curve speed profile of Position command and time setting (incremental position command)

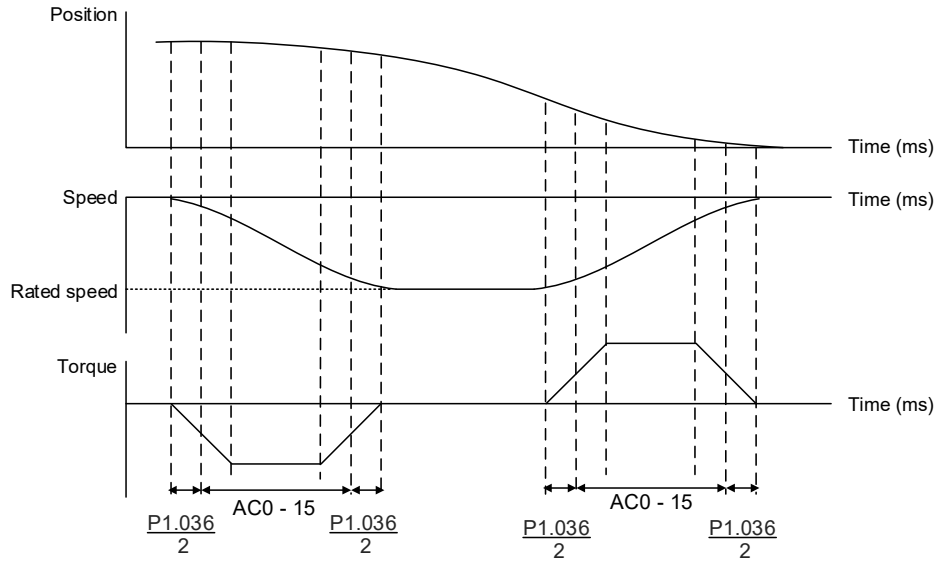

S-curve speed profile of Position command and time setting (decremental position command)

6.2.5 Electronic gear ratio (E-Gear ratio)

The E-Gear ratio (P1.044 and P1.045) provides easy settings for the resolution. The resolution of the servo drive is 24-bit, which means 16,777,216 pulses are generated per motor revolution. Regardless of the encoder resolution (17-bit, 20-bit, or 23-bit), the E-Gear ratio is set according to the servo drive resolution (24-bit).

When the E-Gear ratio is 1, it means 16,777,216 pulses are generated per motor revolution; when the E-Gear ratio is 0.5, then every two pulses from the command (controller) corresponds to one pulse for the motor. A high E-Gear ratio might create a sharp corner in the profile and lead to a high jerk. To solve this problem, apply an S-curve filter or a low-pass filter.

For example, if a workpiece is moved at the speed of 1 μm/pulse after you set a proper E-Gear ratio, it means the workpiece moves 1 μm per pulse command.

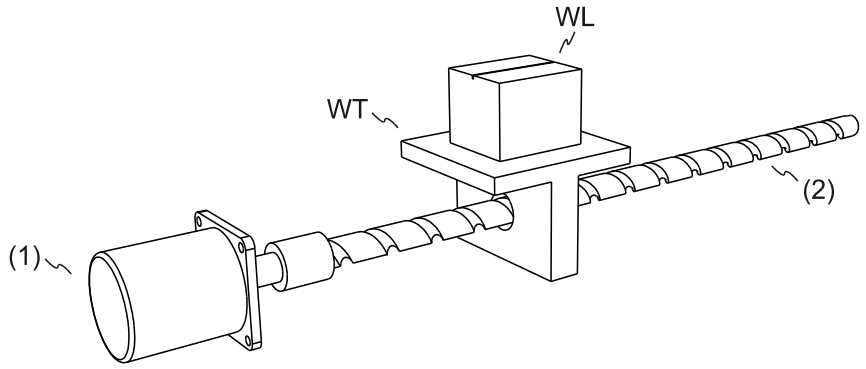

(1) Motor; (2) Ball screw pitch: 3 mm (equals 3,000 μm); WL: workpiece; WT: platform

	Gear ratio	Workpiece moving distance per pulse command
E-Gear is not applied	$= \frac{1}{1}$	$= \frac{3000\frac{\mu m}{rev}}{16777216\frac{pulse}{rev}} \times \frac{1}{1} = \frac{3000}{16777216}$ (Unit: $\frac{\mu m}{pulse}$)
E-Gear is applied	$= \frac{16777216}{3000}$	$= \frac{3000\frac{\mu m}{rev}}{16777216\frac{pulse}{rev}} \times \frac{16777216}{3000} = 1$ (Unit: $\frac{\mu m}{pulse}$)

6.2.6 Low-pass filter

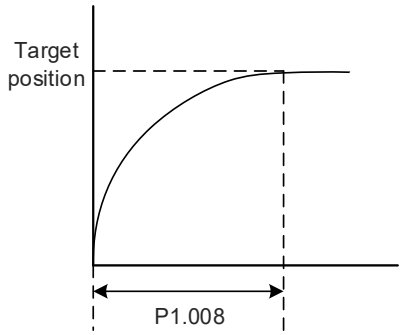

Refer to Chapter 8 for detailed descriptions of the relevant parameter.

Parameter	Function
P1.008	Position command - smoothing constant (low-pass filter)

6.2.7 Timing diagram of PR mode

In PR mode, the Position command is selected with DI.POS0 - POS5 (DI signals of CN1) and triggered with DI.CTRG. Refer to Section 6.2.2 for information about the DI signals and the selected registers. The timing diagrams are shown as follows.

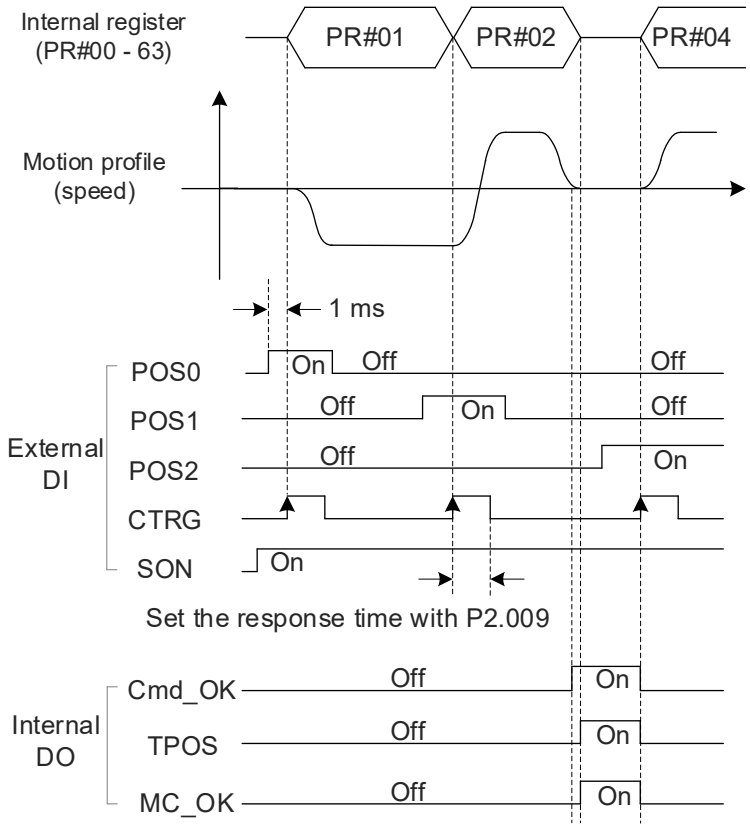

Note: Cmd_OK is On when the PR path is complete; TPOS is On when the position error is smaller than the set value of P1.054; MC_OK is On when both Cmd_OK and TPOS are On.

6.2.8 Gain adjustment of the position loop

Before setting the position control unit, you have to manually set the speed control unit with P2.004 and P2.006 since a speed loop is included in the position loop. Then, set P2.000 and P2.002; the parameter descriptions are as follows.

- P2.000 Position proportional gain (KPP): increasing this gain achieves a larger response bandwidth of position loop.
- P2.002 Position feed forward gain (PFG): increasing this gain reduces the deviation of phase delay.

The position loop response bandwidth (fp) should not be larger than the speed loop response bandwidth (fv): $fp \leq \frac{fv}{4}$

Calculation: $KPP = 2 \times \pi \times fp$

Example:

If the desired position loop response bandwidth is 20 Hz, set KPP to 125. ($2 \times \pi \times 20\ Hz = 125$)

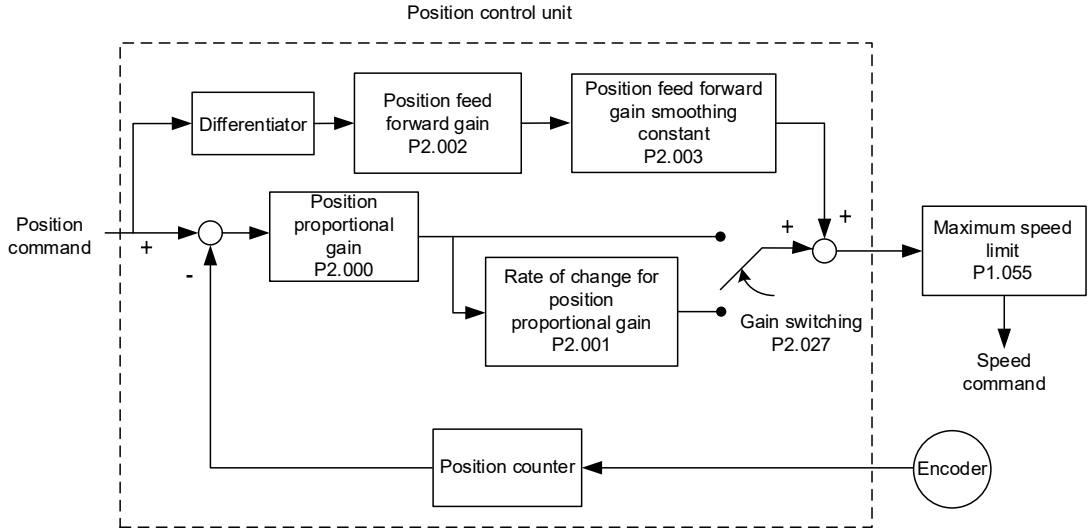

When you set the value of KPP (P2.000) too high, the response bandwidth for the position loop is increased and the phase margin is reduced. This causes the rotor to rotate and vibrate in the forward and reverse directions; you have to decrease the KPP value until the rotor stops vibrating. However, when there is an external torque (e.g., a workpiece is added to the platform), a low value of KPP might not be able to reduce the position following error. In this case, increasing the value of PFG (P2.002) can effectively reduce the position following error.

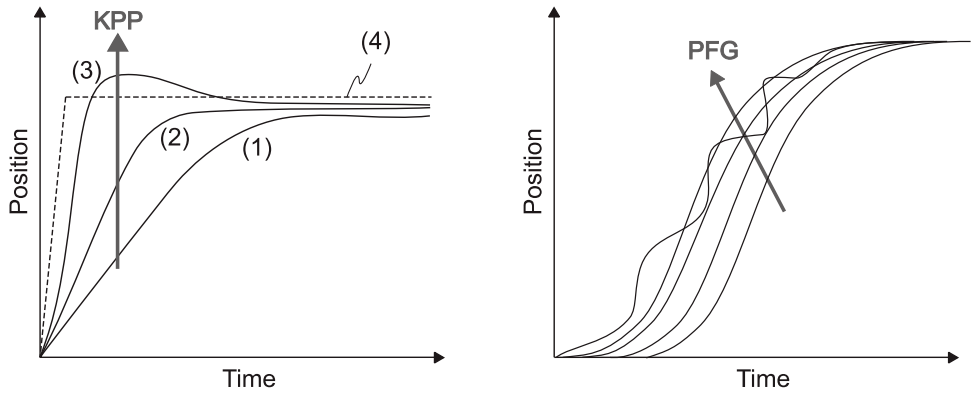

The actual position profile changes from (1) to (3) with the increase in the KPP value.

(4) stands for the Position command.

6.2.9 Low-frequency vibration suppression in Position mode

If the machine is too flexible, mechanical vibration persists even when the motor stops after the positioning command is complete. The low-frequency vibration suppression function can reduce the mechanical vibration. The suppression range is between 1.0 Hz and 100.0 Hz. You can use this function with either auto or manual setting.

Auto setting

If you have difficulty finding the vibration frequency, enable the Auto low-frequency vibration suppression function (P1.029 = 1) to automatically search for the frequency.
When you set P1.029 to 1, the system automatically disables the low-frequency vibration suppression function (P1.026 and P1.028 are set to 0) and starts to search for the vibration frequency. When the detected frequency remains at the same level, the system automatically changes the settings in the following order.

1. Automatically resets P1.029 to 0.
2. Sets P1.025 as the first frequency and P1.026 to 1.
3. Sets P1.027 as the second frequency and P1.028 to 1.

When P1.029 automatically resets to 0 and the low-frequency vibration persists, check if either P1.026 or P1.028 is automatically set to 1. If so, increase the setting of P1.030 (Low-frequency vibration detection). If both P1.026 and P1.028 are 0, it means no vibration frequency is detected. In this case, lower the setting of P1.030 and set P1.029 to 1 to search for the frequency again.

P1.030 sets the detection range for the peak-to-peak amplitude of low-frequency vibration. When the frequency is not detected, it is probably because the setting value of P1.030 is higher than the vibration amplitude of the machine. If so, it is suggested that you decrease the value of P1.030. Note that if the value is set too small, the system might mistakenly regard noises as the low-frequency vibrations. In this case, you can use the Scope function of ASDA-Soft and set the channel to **Position error (pulse)** to observe the peak-to-peak amplitude of the signal during positioning for setting P1.030.

Flowchart of auto low-frequency vibration suppression:

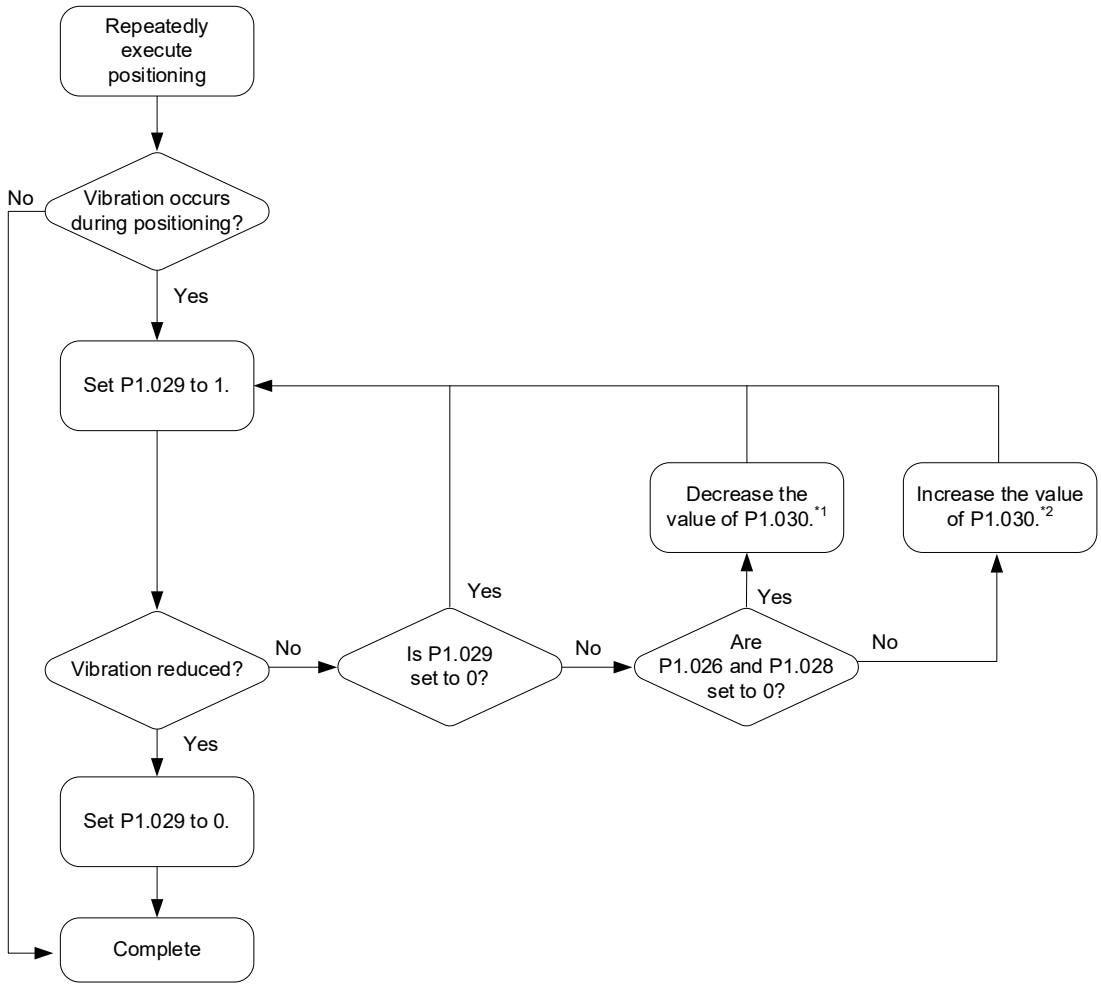

Note:

1. When the values of both P1.026 and P1.028 are 0, it means no frequency is detected. It is probably because P1.030 is set too high so that the low-frequency vibration is not detected.
2. When the value of P1.026 or P1.028 is greater than 0, but the vibration persists, it is probably because P1.030 is set too low, causing the system to mistakenly regard minor frequency or noise as the low-frequency vibration.

Manual setting

When the auto suppression procedure is complete, but the vibration persists, you can manually set P1.025 or P1.027 to suppress the vibration if you have identified the vibration frequency.

There are two sets of low-frequency vibration suppression filters: parameters P1.025 - P1.026 and parameters P1.027 - P1.028. You can use the two sets of parameters to reduce two different low-frequency vibrations.

Use P1.025 and P1.027 to set the frequencies for low-frequency vibration suppression. The filter works only when the parameter setting is close to the actual vibration frequency.

Use P1.026 and P1.028 to set the response after frequency filtering. The bigger the values of P1.026 and P1.028, the better the response. However, if you set the values too high, the motor might not operate smoothly. The default values of P1.026 and P1.028 are 0, which means the two filters are disabled by default.

Refer to Chapter 8 for detailed descriptions of the relevant parameters.

Parameter	Function
P1.025	Low-frequency vibration suppression frequency 1
P1.026	Low-frequency vibration suppression gain 1
P1.027	Low-frequency vibration suppression frequency 2
P1.028	Low-frequency vibration suppression gain 2

6.3 Speed mode

The servo drive can receive two types of speed control commands: analog input and internal register (parameters). The analog command controls the motor speed by external voltage input. The internal register controls the motor speed in two ways. Before operation, respectively set the speed values in the three registers. Then, you can switch among the three sets of speed settings either by using DI.SPD0 and DI.SPD1 of CN1 or by communication. In order to deal with the problem of non-continuous speed when switching registers, you can use the S-curve filter.

6.3.1 Selecting the Speed command source

There are two types of Speed command sources: external analog voltage and internal register (parameters). Select the command source with DI signals of CN1; refer to the following table.

Speed command number	CN1 DI signal		Command source			Content
	SPD1	SPD0				
S1	0	0	Mode	S	External analog signal	Voltage difference between V_REF and GND
				Sz	N/A	Speed command is 0
S2	0	1	Internal register (parameter)			P1.009
S3	1	0				P1.010
S4	1	1				P1.011

- Status of SPD0 and SPD1: 0 means the DI is Off (the circuit is open); 1 means the DI is On (the circuit is closed).
- When both SPD0 and SPD1 are 0, if the drive is in Sz mode, the command is 0. Thus, if there is no need to use the analog voltage for the Speed command, you can use Sz mode to avoid the problem of zero drift in the voltage. If the drive is in S mode, then the command is the voltage difference between V_REF and GND. The input voltage range is -10V to +10V, and you can adjust the corresponding speed with P1.040.
- When either SPD0 or SPD1 is not 0, the internal parameters become the source for the Speed command. The command is activated once the status of SPD0 or SPD1 is switched. There is no need to use DI.CTRG for triggering.
- Rotation speed = parameter setting value x unit (0.1 rpm).
  For example, if P1.009 = +30000, then rotation speed = +30000 x 0.1 rpm = +3000 rpm

The Speed command can be used to control the speed in Speed mode (S or Sz) or limit the speed in Torque mode (T or Tz).

6.3.2 Control structure of Speed mode

The following diagram shows the basic control structure of Speed mode.

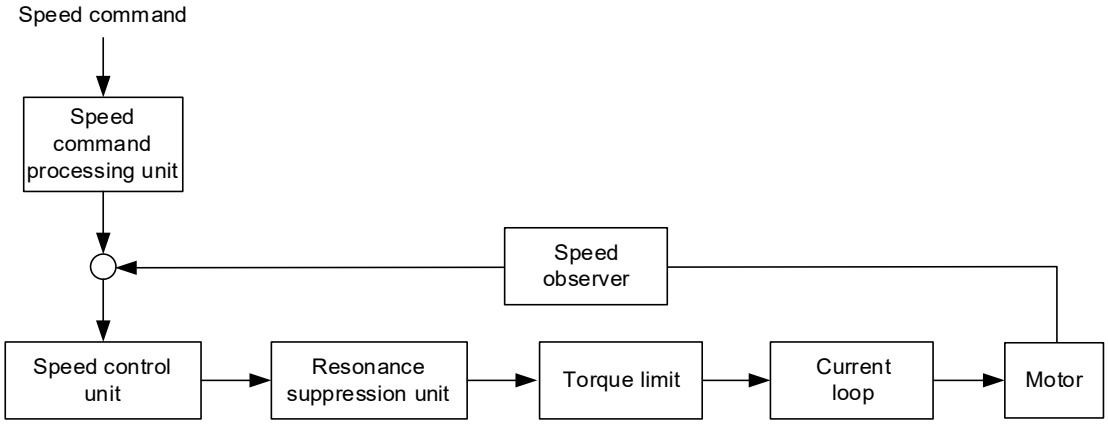

The Speed command processing unit selects the command source (see Section 6.3.1), including the scaling parameter (P1.040) for rotation speed corresponding to the analog voltage and the S-curve parameter (P1.036) for smoothing the Speed command. The speed control unit manages the gain parameters for the servo drive and calculates the current command for servo motor in real time. The resonance suppression unit suppresses the mechanical resonance.

The structure of Speed command processing unit is as follows.

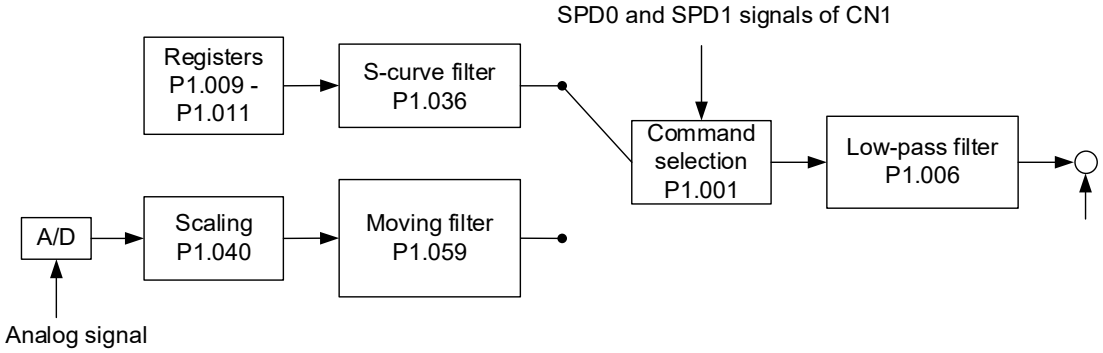

The upper path is the command from the internal register and the lower one is the command from the external analog voltage, which is selected according to the statuses of SPD0 and SPD1, and the setting of P1.001 (S or Sz). In general, the S-curve and low-pass filters are applied to achieve a smoother response.

6.3.3 Smoothing the Speed command

S-curve filter

During the process of acceleration or deceleration, the S-curve filter uses the three-stage acceleration curve and creates a smoother motion profile. Using the S-curve filter avoids high jerks (rate of change of acceleration), mechanical resonance, and noise caused by abrupt changes in the speed input. You can use the following parameters for adjustment.

- P1.034 S-curve acceleration constant: adjusts the slope of the speed change during acceleration.
- P1.035 S-curve deceleration constant: adjusts the slope of the speed change during deceleration.
- P1.036 S-curve acceleration / deceleration smoothing constant: improves the stability of the motor when it starts and stops.

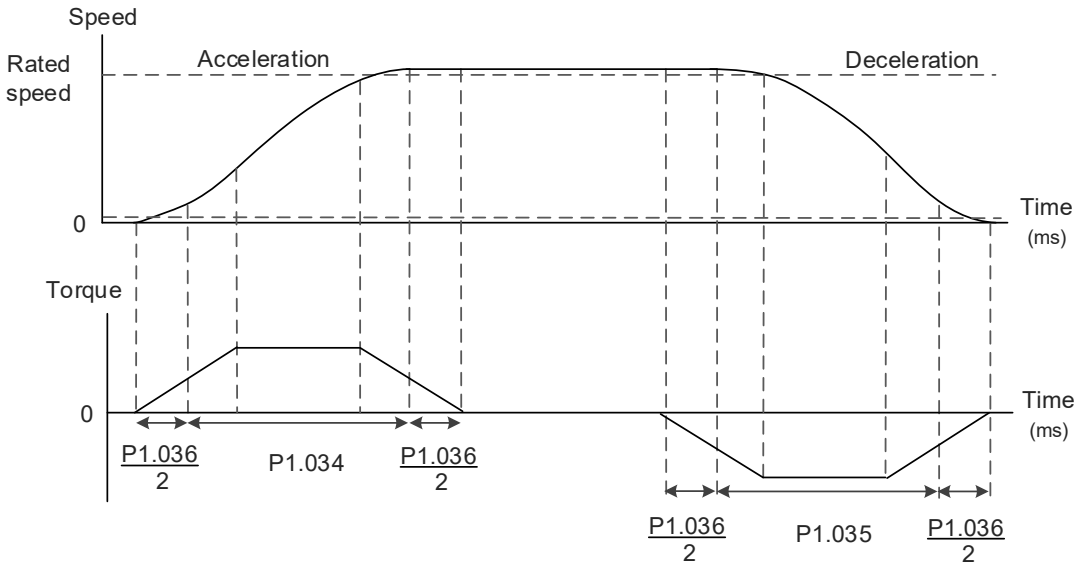

Figure 6.3.3.1 S-curve speed profile of Speed command and time setting

6

Analog Speed command filter

The Analog Speed command filter provided by the servo drive helps to stabilize the motor operation when the analog input signal (speed) changes rapidly.

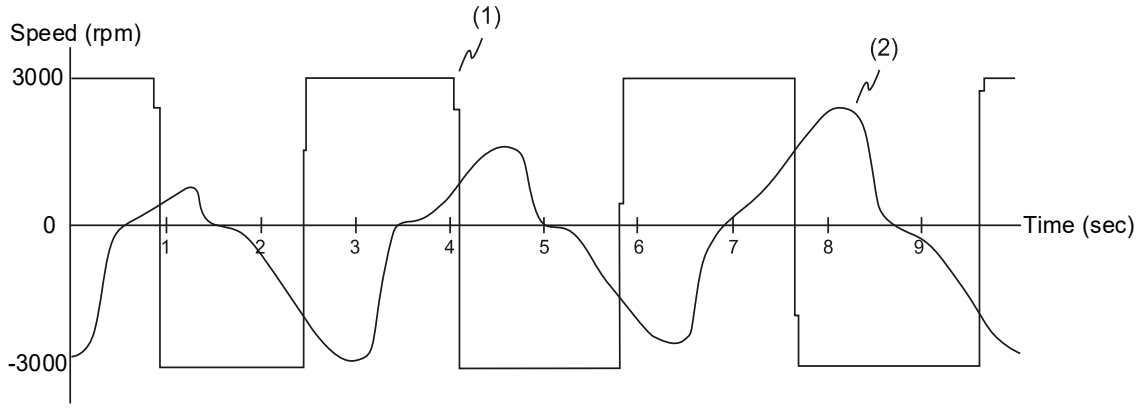

(1) Analog Speed command; (2) Motor speed

The time planning for smoothing analog input commands is the same as that for a general speed S-curve filter, and the speed and acceleration curves are continuous. In the preceding diagram, the slopes of the Speed command during acceleration and deceleration are different. It shows a poor performance in command following. Adjust the time settings (P1.034, P1.035, and P1.036) according to the actual application to improve the performance.

Low-pass filter for Speed commands

The low-pass filter is usually used to remove unwanted high-frequency response or noise so that the speed change is smoother.

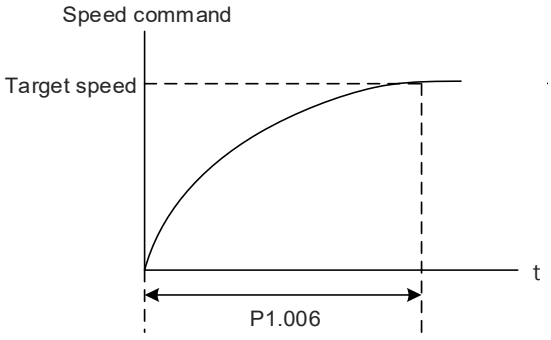

Refer to Chapter 8 for detailed descriptions of the relevant parameter.

Parameter	Function
P1.006	Speed command - smoothing constant (low-pass filter)

6.3.4 Scaling of the analog command

The Speed command is controlled by the analog voltage difference between V_REF and GND. Use P1.040 and P1.081 to adjust the slope and range of the speed command. Moreover, you can use P1.082 to change the time constant for switching between P1.040 and P1.081.

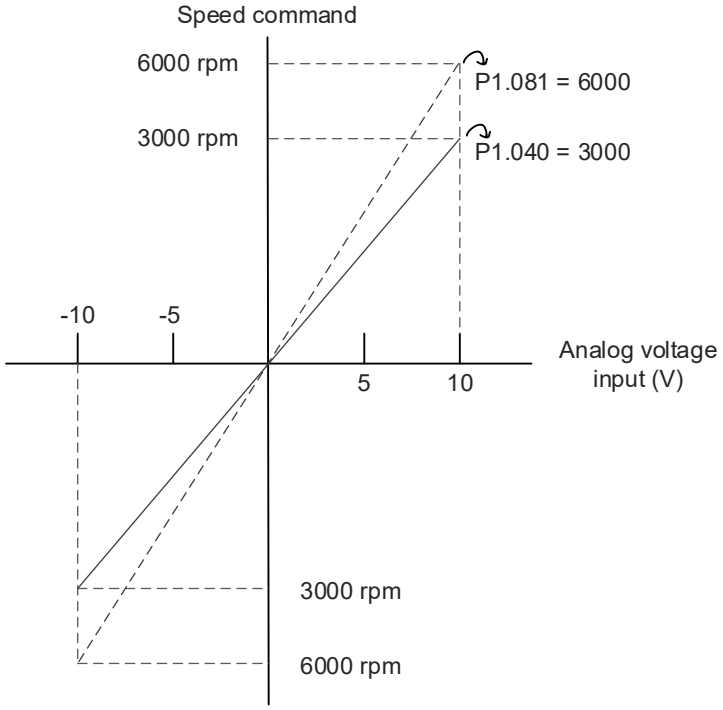

Refer to Chapter 8 for detailed descriptions of the relevant parameters.

Parameter	Function
P1.040	Maximum motor speed for analog Speed command 1
P1.081	Maximum motor speed for analog Speed command 2
P1.082	Time constant for switching between P1.040 and P1.081 (Reserved)

6.3.5 Timing diagram of Speed mode

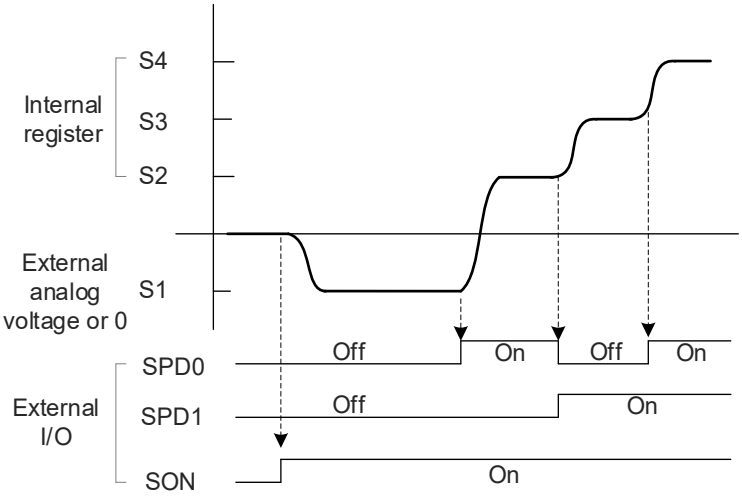

Note:
1. “Off” means the DI is Off (the circuit is open); “On” means the DI is On (the circuit is closed).
2. When the drive is in Sz mode, the Speed command S1 = 0; when the drive is in S mode, the Speed command S1 refers to the external analog voltage input.
3. In the Servo On state, the command is selected according to the statuses of SPD0 and SPD1.

6.3.6 Gain adjustment of the speed loop

The structure of the speed control unit is shown in the following diagram.

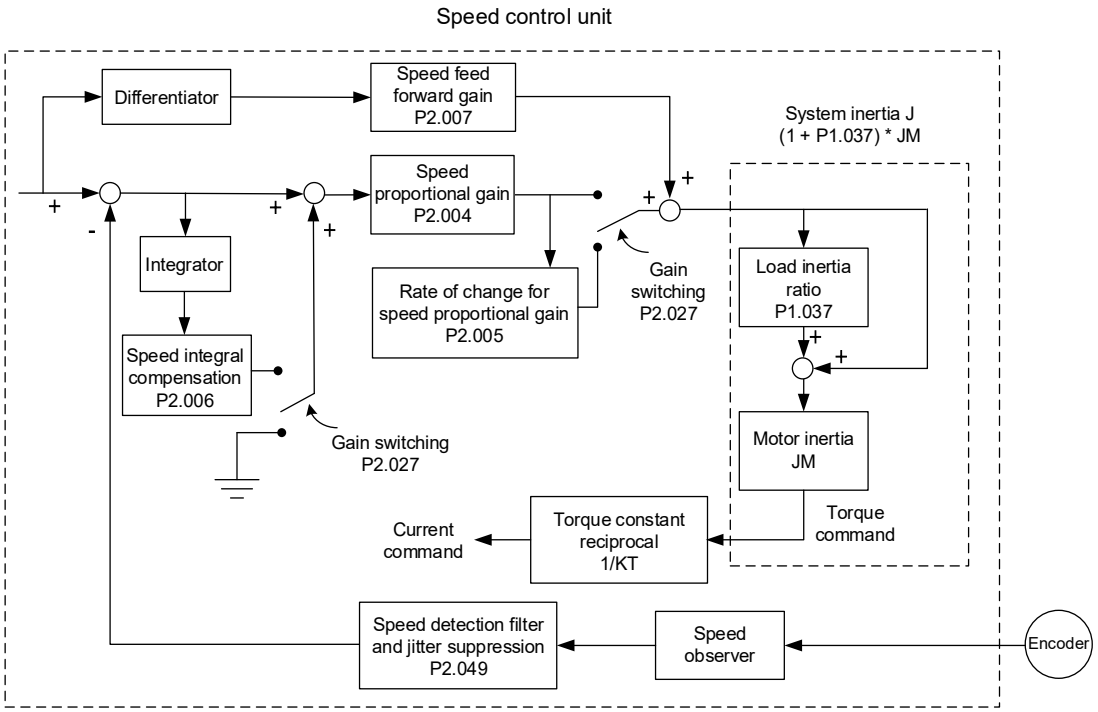

In the speed control unit, you can adjust different types of gains manually or by using the multiple gain adjustment modes.

Gain adjustment mode

Refer to Chapter 5 Tuning.

Manual mode

Manually set the parameters with all auto or auxiliary functions disabled.

In Manual mode (P2.032 = 0), you can set P2.004, P2.006, and P2.007 for the speed loop; the parameter descriptions are as follows.

- P2.004 Speed proportional gain (KVP): increasing this gain achieves a larger response bandwidth of speed loop.
- P2.006 Speed integral compensation (KVI): increasing this gain achieves a higher low-frequency rigidity of speed loop and reduces the steady-state error. However, the phase margin becomes smaller. If you set this gain too high, it reduces the system stability.
- P2.007 Speed feed forward gain (KVF): increasing this gain reduces the deviation of phase delay.

Here, the step response is used to illustrate the basic principles for speed proportional gain (KVP), speed integral compensation (KVI), and speed feed forward gain (KVF). Refer to the following examples.

6

Time domain

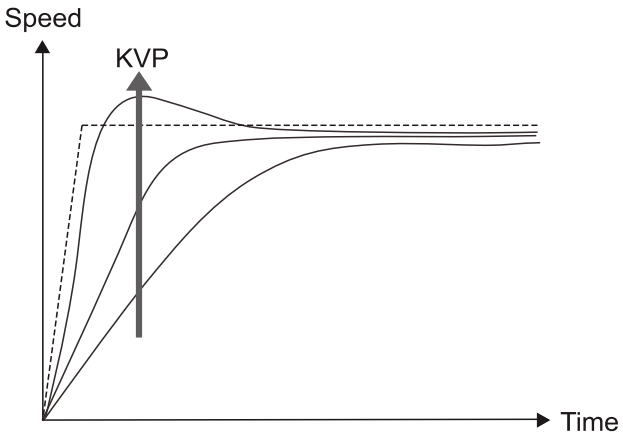

The higher the KVP value, the larger the bandwidth, and the shorter the speed increase time. However, if the KVP value is set too high, the phase margin becomes too small. The effect of KVP is not as good as KVI for the steady-state error but is better in reducing the following error.

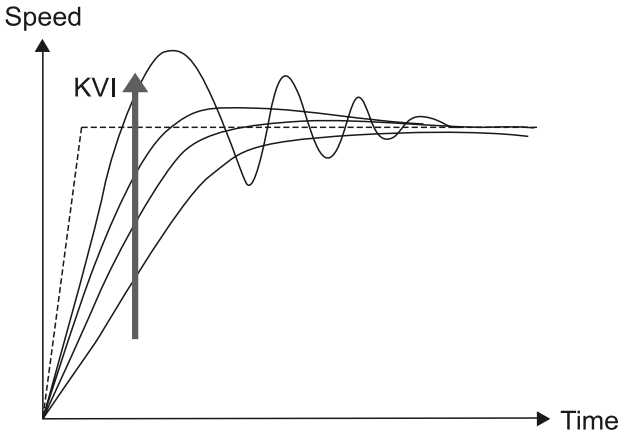

The higher the KVI value, the larger the low-frequency gain. It shortens the time for the steady-state error to reduce to zero but drastically reduces the phase margin. However, it does not significantly reduce the following error.

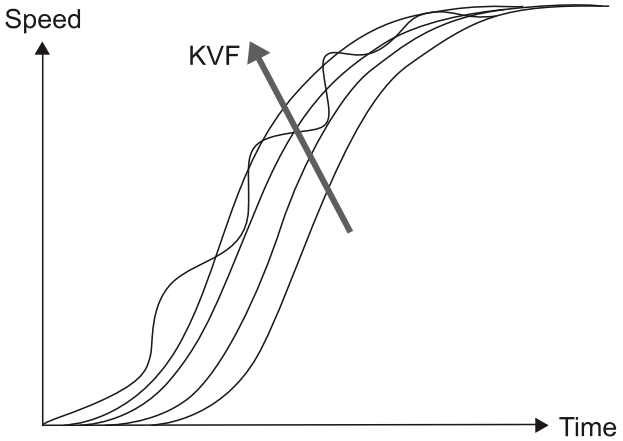

The closer the KVF value is to 1, the more complete the forward compensation.
The following error becomes very small. However, setting the KVF value too high causes vibration.

6.3.7 Resonance suppression unit

When mechanical resonance occurs, it is probably because the stiffness of the control system is too high or the response bandwidth is too great. Eliminating these two factors can improve the situation. You can use the low-pass filter (P2.025) and Notch filters (P2.023, P2.024, and P2.043 - P2.046) to suppress the resonance with the control parameters remain unchanged. For dealing with mechanical resonance, refer to Section 5.1.6.

Note: the auto resonance suppression function can be enabled by setting P2.047, but the function is only supported by Notch filter 2 (P2.043 and P2.044) and Notch filter 3 (P2.045 and P2.046).

Resonance suppression unit

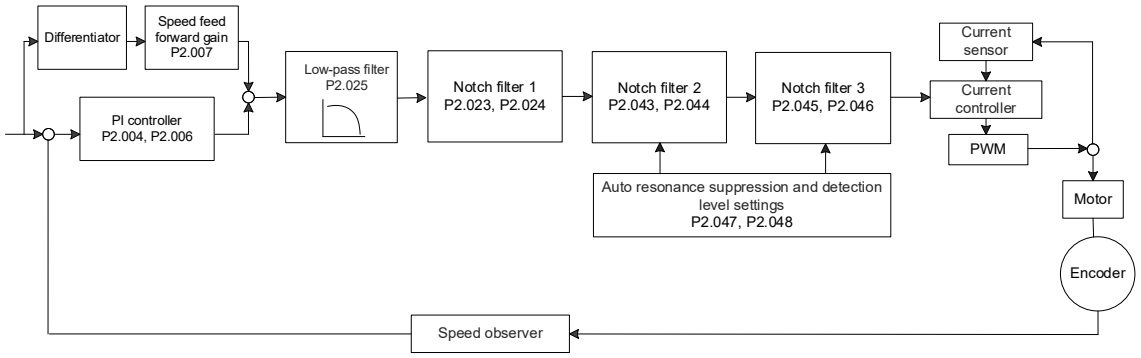

P2.047		Function
Previous setting value	New setting value	
0	1	Clears the settings of P2.043 to P2.046; enables the auto resonance suppression function.
0	2	Clears the settings of P2.043 to P2.046; enables the auto resonance suppression function.
1	0	Saves the current settings of P2.043 to P2.046; disables the auto resonance suppression function.
1	1	Clears the settings of P2.043 to P2.046; enables the auto resonance suppression function.
1	2	Does not clear the settings of P2.043 to P2.046; continues to enable the auto resonance suppression function.
2	0	Saves the current settings of P2.043 to P2.046; disables the auto resonance suppression function.
2	1	Clears the settings of P2.043 to P2.046; enables the auto resonance suppression function.
2	2	Does not clear the settings of P2.043 to P2.046; continues to enable the auto resonance suppression function.

Refer to Chapter 8 for detailed descriptions of the relevant parameters.

Parameter	Function
P2.023	Notch filter 1 - frequency
P2.024	Notch filter 1 - attenuation level
P2.025	Resonance suppression low-pass filter
P2.043	Notch filter 2 - frequency
P2.044	Notch filter 2 - attenuation level
P2.045	Notch filter 3 - frequency
P2.046	Notch filter 3 - attenuation level

The servo drive provides two types of filters, Notch filter and low-pass filter, for suppressing the resonance. See the following diagrams for the effects of these filters.

System open-loop gain with resonance:

6

■ Notch filter

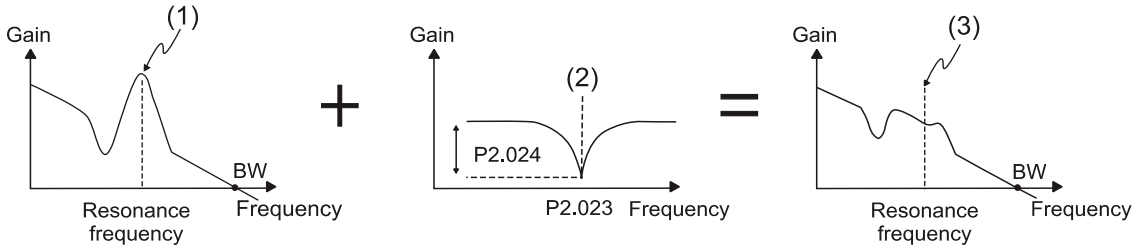

(1) Resonance point; (2) Notch filter; (3) Resonance point suppressed by the Notch filter

■ Low-pass filter

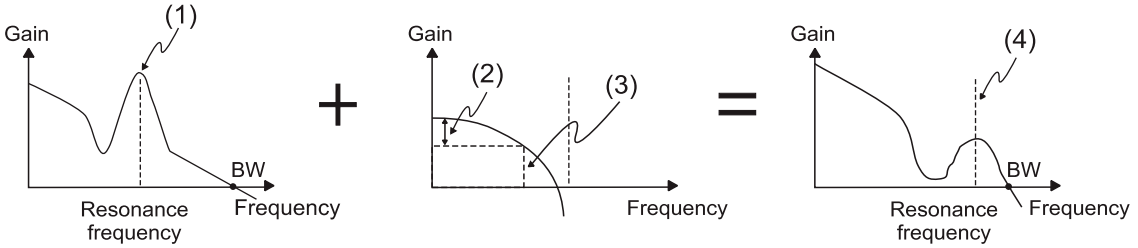

(1) Resonance point; (2) Attenuation level (-3 dB);

(3) Low-pass filter (Cutoff frequency of low-pass filter = 1000 / P2.025 Hz);

(4) Resonance point suppressed by the low-pass filter

To conclude from these two examples, if you increase the value of P2.025 (Low-pass filter) from 0, the bandwidth (BW) becomes smaller. Although it solves the problem of resonance, it also reduces the response bandwidth and phase margin, making the system unstable.

If knowing the resonance frequency, you can suppress the resonance by using the Notch filter, which is better than using the low-pass filter in this condition. The frequency setting ranges for the Notch filters are 50 - 1000 Hz (P2.023) and 50 - 2000 Hz (P2.043 and P2.045), and the attenuation level is 0 - 32 dB. If the resonance frequency drifts significantly with time or due to other causes, using the low-pass filter to reduce the resonance is suggested.

6.4 Torque mode

The Torque mode (T or Tz) is suitable for torque control applications, such as printing machines and winding machines. The servo drive can receive two types of torque control commands: analog input and internal register (parameters). The analog command controls the motor torque by external voltage input, while the internal registers use the internal parameters P1.012 - P1.014 for the Torque command.

6.4.1 Selecting the Torque command source

There are two types of Torque command sources: external analog voltage and internal parameters. Select the command source with DI signals of CN1; refer to the following table.

Torque command number	CN1 DI signal		Command source			Content
	TCM1	TCM0				
T1	0	0	Mode	T	External analog signal	Voltage difference between T_REF and GND
				Tz	N/A	Torque command is 0
T2	0	1	Internal register (parameter)			P1.012
T3	1	0				P1.013
T4	1	1				P1.014

- Status of TCM0 and TCM1: 0 means the DI is Off (the circuit is open); 1 means the DI is On (the circuit is closed).
- When both TCM0 and TCM1 are 0, if the drive is in Tz mode, the command is 0. Thus, if there is no need to use the analog voltage for the Torque command, you can use Tz mode to avoid the problem of zero drift in the voltage. If the drive is in T mode, then the command is the voltage difference between T_REF and GND. The input voltage range is -10V to +10V, and you can adjust the corresponding torque with P1.041.
- When either TCM0 or TCM1 is not 0, the internal parameters become the source for the Torque command. The command is activated once the status of TCM0 or TCM1 is switched. There is no need to use DI.CTRG for triggering.

The Torque command can be used to control the torque in Torque mode (T or Tz) or limit the torque in Speed mode (S or Sz).

6

6.4.2 Control structure of Torque mode

The following diagram shows the basic control structure of Torque mode.

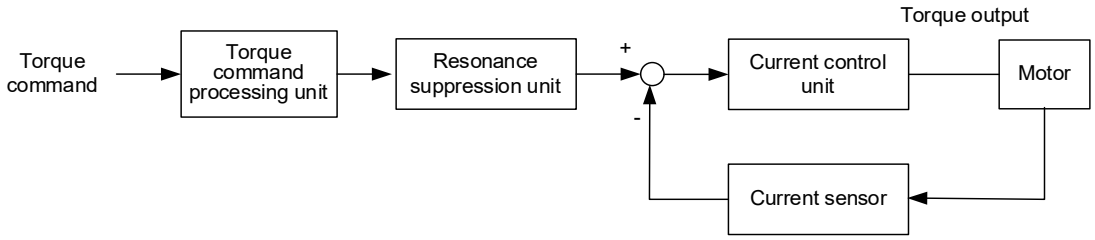

The Torque command processing unit selects the command source (see Section 6.4.1), including the scaling parameter (P1.041) for the torque corresponding to the analog voltage and the low-pass filter (P1.007) for smoothing the Torque command. The current control unit manages the gain parameters for the servo drive and calculates the current for servo motor in real time.

The structure of Torque command processing unit is as follows.

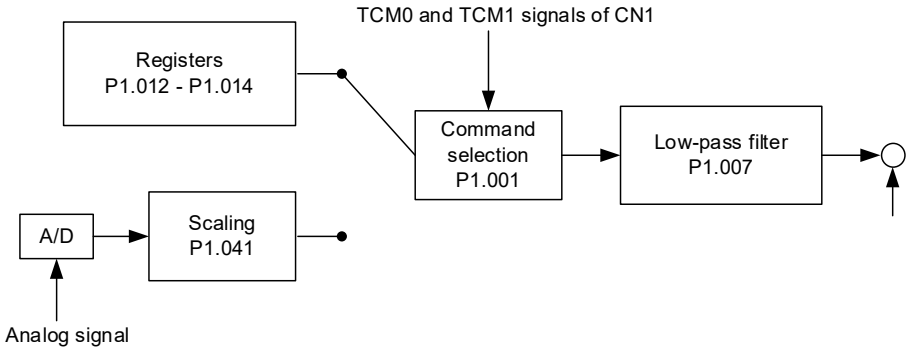

The upper path is the command from the internal register and the lower one is the command from the external analog voltage, which is selected according to the statuses of TCM0 and TCM1, and the setting of P1.001 (T or Tz). Adjust the torque with the analog voltage scaling (P1.041) and smooth the response with the low-pass filter (P1.007).

6.4.3 Smoothing the Torque command

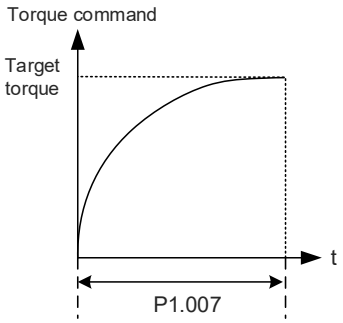

Refer to Chapter 8 for detailed descriptions of the relevant parameter.

Parameter	Function
P1.007	Torque command - smoothing constant (low-pass filter)

6.4.4 Scaling of the analog command

The Torque command is controlled by the analog voltage difference between T_REF and GND. Adjust the slope and range of the torque command with P1.041.

For example:

1. If you set P1.041 to 100 and the external input voltage is 10V, the Torque command is 100% of the rated torque.
2. If you set P1.041 to 300 and the external input voltage is 10V, the Torque command is 300% of the rated torque.

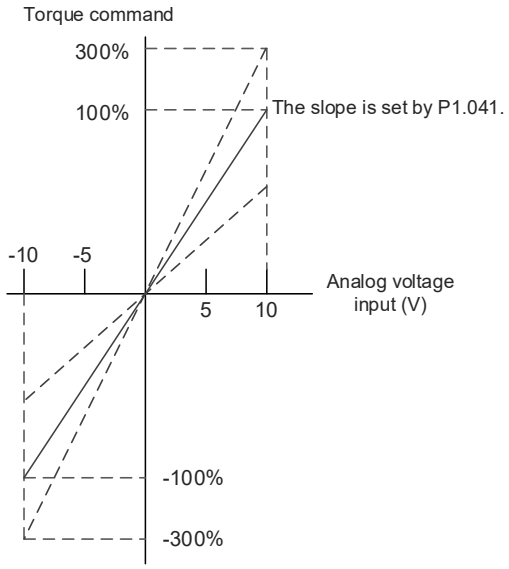

Refer to Chapter 8 for detailed descriptions of the relevant parameter.

Parameter	Function
P1.041	Maximum output for analog Torque command

6.4.5 Timing diagram of Torque mode

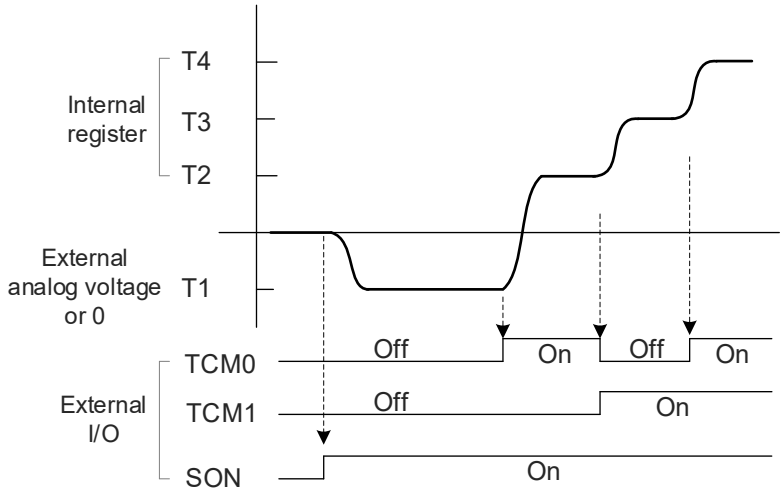

Note:
1. “Off” means the DI is Off (the circuit is open); “On” means the DI is On (the circuit is closed).
2. When the drive is in Tz mode, the Torque command T1 = 0; when the drive is in T mode, the Torque command T1 refers to the external analog voltage input.
3. In the Servo On state, the command is selected according to the statuses of TCM0 and TCM1.

6.5 Dual-mode and multi-mode operations

Apart from the single modes for position, speed, and torque control, there are also dual-mode and multi-mode operations available (see Section 6.1).

6

Mode	Short name	Code	Description
Dual mode	S-PT	06	Switch between S and PT modes with DI.S-P.
	T-PT	07	Switch between T and PT modes with DI.T-P.
	S-PR	08	Switch between S and PR modes with DI.S-P.
	T-PR	09	Switch between T and PR modes with DI.T-P.
	S-T	0A	Switch between S and T modes with DI.S-T.
	PT-PR	0D	Switch between PT and PR modes with DI.PT-PR.
Multiple modes	PT-PR-S	0E	Switch between PT, PR, and S modes with DI.S-P and DI.PT-PR.
	PT-PR-T	0F	Switch between PT, PR, and T modes with DI.T-P and DI.PT-PR.

The Sz-Tz dual mode is not supported. To avoid occupying too many digital inputs in dual mode or multiple modes, S-T mode can use the external analog voltage as the command source to reduce the use of DI points (SPD0, SPD1 or TCM0, TCM1); the Position mode can use the PT mode pulse input as the command source to reduce the use of DI points (POS0 - POS5).

Refer to Section 3.2.2 for the tables of default DI / DO functions.

6.5.1 Speed-Position dual mode

Speed-Position dual mode includes S-PT and S-PR. The command source for S-PT is the external pulse while the source for S-PR is the internal parameters P6.000 - P7.027. You can select the source for the Speed command as the external analog voltage or the internal parameters P1.009 - P1.011. The switch between Speed and Position modes is controlled by DI.S-P (0x18). The switch between PT and PR for Position mode is controlled by DI.PT-PR (0x2B). The following timing diagram illustrates the S-PR mode. The switch between Position and Speed commands in S-PR mode is controlled by DI signals.

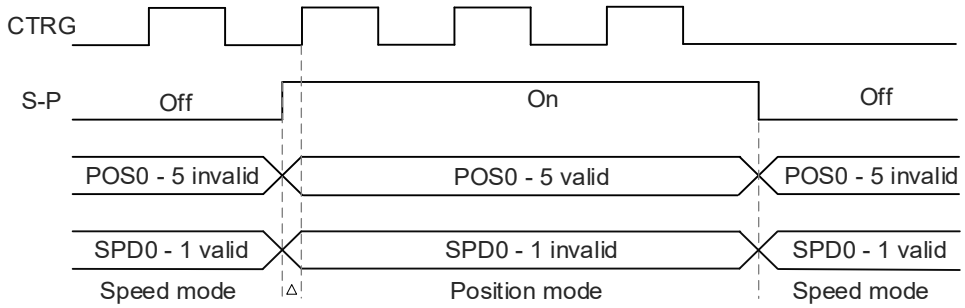

Figure 6.5.1.1 Speed-Position dual mode

In Speed mode (DI.S-P is Off), you select the Speed command with DI.SPD0 and DI.SPD1, and DI.CTRG is not applicable. When the drive switches to Position mode (DI.S-P is On), since the Position command has not been issued (it waits for the rising edge of DI.CTRG), the motor stops (indicated by △ in the preceding figure). The Position command is selected with DI.POS0 - DI.POS5 when the rising edge of DI.CTRG is triggered, and then the motor moves to the specified position. When DI.S-P is Off, the drive returns to the Speed mode. Refer to the introduction section of each single mode for the DI signals and the selected commands.

6.5.2 Speed-Torque dual mode

Speed-Torque dual mode includes only S-T. The source of the Speed command can be the external analog voltage or the internal parameters P1.009 - P1.011, which you select with DI.SPD0 and DI.SPD1. Similarly, the source of the Torque command can be the external analog voltage or the internal parameters P1.012 - P1.014, which you select with DI.TCM0 and DI.TCM1. The following timing diagram illustrates S-T mode. The switch between Speed and Torque modes is controlled by DI.S-T (0x19).

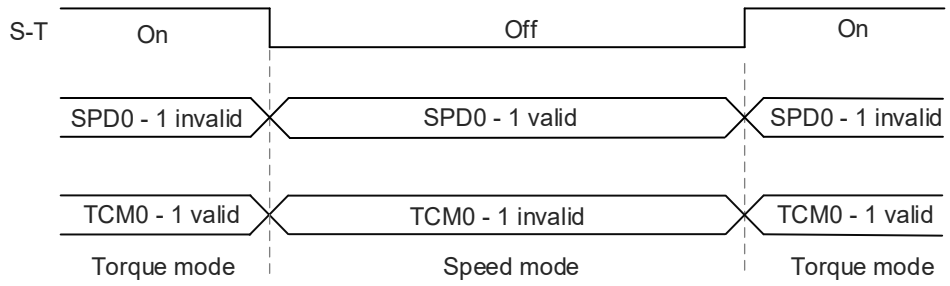

Figure 6.5.2.1 Speed-Torque dual mode

In Torque mode (DI.S-T is On), you select the Torque command with DI.TCM0 and DI.TCM1. When the drive switches to Speed mode (DI.S-T is Off), you select the Speed command with DI.SPD0 and DI.SPD1, and then the motor operates according to the Speed command. When DI.S-T is On, the drive returns to the Torque mode. Refer to the introduction section of each single mode for the DI signals and the selected commands.

6.5.3 Torque-Position dual mode

Torque-Position dual mode includes T-PT and T-PR. The command source for T-PT is the external pulse while the source for T-PR is the internal parameters P6.000 - P7.027. You can select the source for the Torque command as the external analog voltage or the internal parameters P1.012 - P1.014. The switch between Torque and Position modes is controlled by DI.T-P (0x20). The switch between PT and PR for Position mode is controlled by DI.PT-PR (0x2B). The following timing diagram illustrates T-PR mode. The switch between Position and Torque commands in T-PR mode is controlled by DI signals.

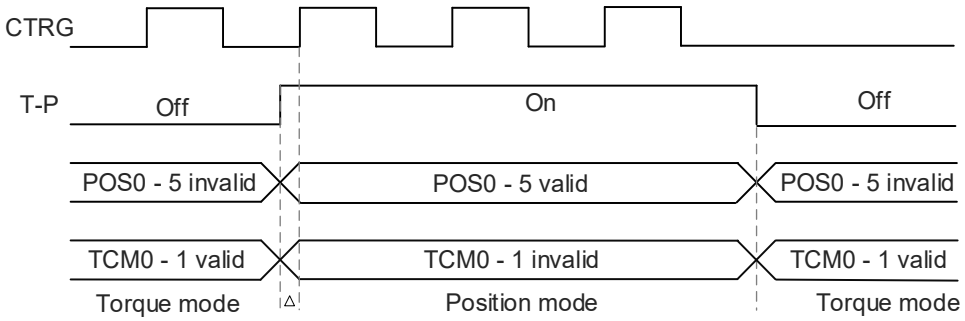

Figure 6.5.3.1 Torque-Position dual mode

In Torque mode (DI.T-P is Off), you select the Torque command with DI.TCM0 and DI.TCM1, and DI.CTRG is not applicable. When the drive switches to Position mode (DI.T-P is On), since the Position command has not been issued (it waits for the rising edge of DI.CTRG), the motor stops (indicated by △ in the preceding figure). The Position command is selected with DI.POS0 - DI.POS5 when the rising edge of DI.CTRG is triggered, and then the motor operates to the specified position. When DI.T-P is Off, the drive returns to the Torque mode. Refer to the introduction section of each single mode for the DI signals and the selected commands.

6.6 Others

6.6.1 Applying the speed limit

The maximum motor speed in each mode (Position, Speed, or Torque mode) is determined by the internal parameter P1.055.

The sources for Speed limit command and Speed command are the same. You can use either the external analog voltage or the internal parameters P1.009 - P1.011. Refer to Section 6.3.1 for details.

The Speed limit function is applicable only in Torque mode (T or Tz) for limiting the motor speed. If you are using the external analog voltage in Torque mode, you can use the available DI signals to set SPD0 and SPD1 for the motor speed limit value (internal parameters). If there are no DI signals available, use the analog voltage input for the Speed limit command. When you set P1.002.X (Disable / enable Speed limit function) to 1, the Speed limit function is enabled. The timing diagram is shown as follows.

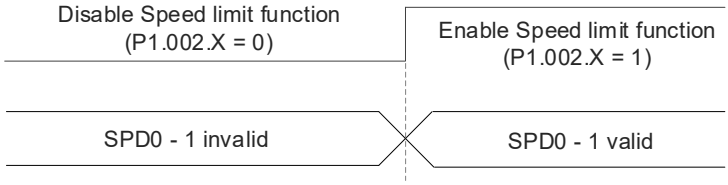

Source selection for Speed limit command

6.6.2 Applying the torque limit

The sources for Torque limit command and Torque command are the same. You can use either the external analog voltage or the internal parameters P1.012 - P1.014. Refer to Section 6.4.1 for details.

The Torque limit function is applicable in Position mode (PT or PR) or Speed mode (S) for limiting the motor torque output. If you are using the external pulse in Position mode or using the external analog voltage in Speed mode, you can use the available DI signals to set TCM0 and TCM1 for the torque limit command (internal parameters). If there are no DI signals available, use the analog voltage input for the Torque limit command. When you set P1.002.Y (Disable / enable Torque limit function) to 1, the Torque limit function is enabled. The timing diagram is shown as follows.

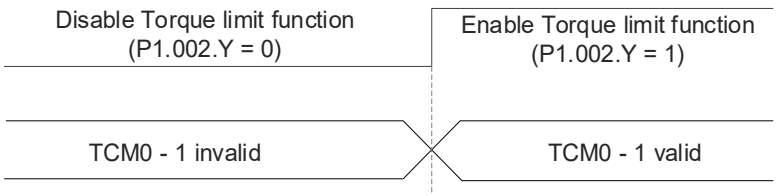

Source selection for Torque limit command

6.6.3 Analog monitoring

You can find the required voltage signal with analog monitoring. The servo drive provides two analog channels; refer to Chapter 3 for the wiring details.

Example:

If the analog voltage output is 8V when the motor speed is 1,000 rpm and the maximum speed of the motor is 5,000 rpm, the setting of P1.004 is as follows.

$$P1.004 = \frac{\text{Required speed}}{\text{Max. speed}} \times 100\% = \frac{1000\ \text{rpm}}{5000\ \text{rpm}} \times 100\% = 20\%$$

You can calculate the voltage output corresponding to the current motor speed with the following formula.

Motor speed	MON1 analog monitor output
300 rpm	$MON1 = 8V \times \frac{\text{Current speed}}{\text{Max. speed} \times \frac{P1.004}{100}} \times 100\% = 8V \times \frac{300\ \text{rpm}}{5000\ \text{rpm} \times \frac{20}{100}} \times 100\% = 2.4V$
900 rpm	$MON1 = 8V \times \frac{\text{Current speed}}{\text{Max. speed} \times \frac{P1.004}{100}} \times 100\% = 8V \times \frac{900\ \text{rpm}}{5000\ \text{rpm} \times \frac{20}{100}} \times 100\% = 7.2V$

Voltage drift:

Given the voltage drift of analog output, the voltage level defined as zero voltage is different from the set zero point. To fix this problem, use DOF1 (P4.020) and DOF2 (P4.021) to compensate the voltage output offset. The voltage level for analog monitoring output is ±8V. If the output voltage exceeds the range, it is limited within ±8V. The resolution is 10-bit, which is equivalent to 13 mV/LSB.

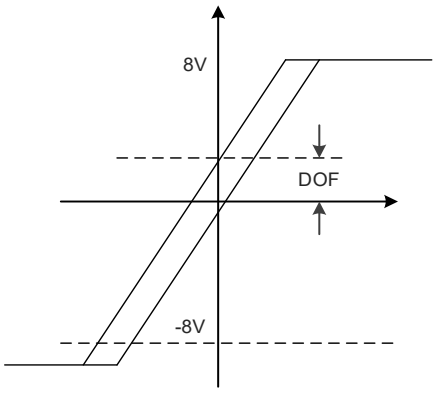

Refer to Chapter 8 for detailed descriptions of the relevant parameters.

Parameter	Function
P0.003	Analog output monitoring
P1.003	Encoder pulse output polarity
P1.004	MON1 analog monitor output ratio
P1.005	MON2 analog monitor output ratio
P4.020	Analog monitor output (Ch1) - offset compensation value
P4.021	Analog monitor output (Ch2) - offset compensation value

(This page is intentionally left blank.)

Motion Control

7

This chapter introduces internal motion commands of the servo drive in PR mode. In this mode, motion commands are generated based on the internal command of the servo drive. Various motion commands are available, including Homing, Speed, Position, Jump, Write, and Rotary Axis Position commands. This chapter contains detailed description of each command type.

7.1 PR mode description ····· 7-2
7.1.1 Shared parameters for PR paths ····· 7-4
7.1.2 Monitoring variables for PR mode ····· 7-6
7.1.3 Motion Control commands ····· 7-9
7.1.3.1 Homing methods ····· 7-9
7.1.3.2 Speed command ····· 7-22
7.1.3.3 Position command ····· 7-24
7.1.3.4 Jump command ····· 7-27
7.1.3.5 Write command ····· 7-29
7.1.3.6 Rotary Axis Position (Index Position) command ····· 7-31
7.1.4 Overview of the PR path ····· 7-35
7.1.5 Trigger methods for the PR path ····· 7-41
7.1.6 PR path execution flow ····· 7-45
7.1.7 Data array ····· 7-57

7.1 PR mode description

In PR mode, the servo drive automatically generates the motion commands and saves all settings in the servo drive parameter file. Thus, changing parameter settings simultaneously changes the contents of PR paths. The servo drive provides 64 sets of PR path settings, which include homing methods, Speed command, Position command, Jump command, Write command, and Rotary Axis Position (Index Position) command.

The property and corresponding data content for each PR path are set by parameters. You can find information of all PR parameters in the descriptions for parameter groups 6 and 7 in Chapter 8. For example, PR#01 is defined by parameters P6.002 and P6.003. P6.002 specifies the property of PR#01, such as the PR command type, whether to interrupt, and whether to auto-execute the next PR path. The definition of P6.003 is subject to change based on the property set in P6.002. When P6.002 is set to a Speed command, then P6.003 specifies the target speed. When P6.002 is set to a Jump command, then P6.003 specifies the target PR path. PR#02 is defined by parameters P6.004 and P6.005, and they work the same way as P6.002 and P6.003. The same is true for the rest of the PR paths. See Figure 7.1.1.

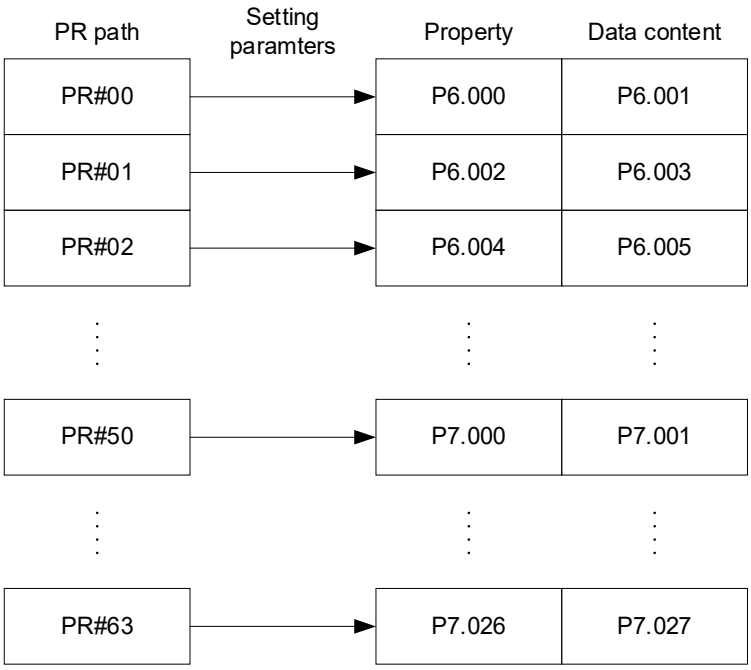

Figure 7.1.1 Setting parameters for each PR path

In ASDA-Soft, when you select a PR path to edit in PR mode, the corresponding setting parameters appear at the top of the window. See Figure 7.1.2. If you select PR#01, the settings of P6.002 and P6.003 appear at the top of the editing section. Table 7.1.1 shows that the path property and data content differ based on the motion command type with P6.002 and P6.003 as the example. For more information about Motion Control commands, refer to Section 7.1.3.

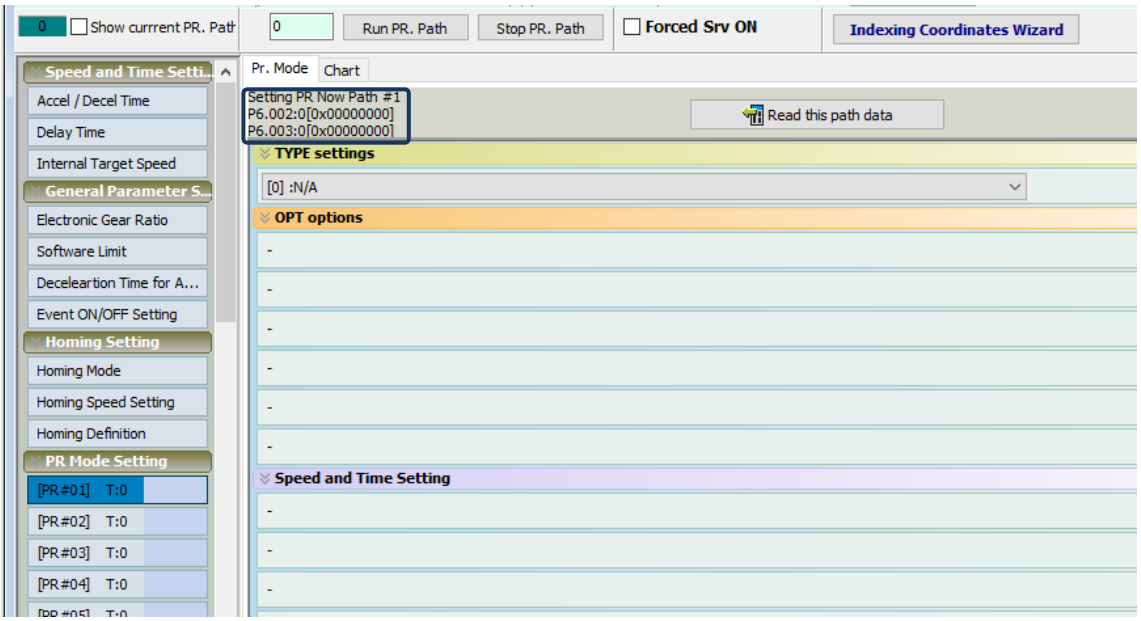

Figure 7.1.2 PR Mode Setting screen in ASDA-Soft

Table 7.1.1 Example of PR#01 property and data content

Bit / PR#01	31 - 28	27 - 24	23 - 20	19 - 16	15 - 12	11 - 8	7 - 4	3 - 0
P6.002	-	AUTO	DLY	SPD	DEC	ACC	OPT	TYPE
P6.003	Data content (32-bit)							

Note:
TYPE: path type

TYPE settings	Path type
1	SPEED, constant speed control
2	SINGLE, positioning control. The execution stops once the positioning is complete.
3	AUTO, positioning control. The next PR path is automatically loaded once the positioning is complete.
7	JUMP, jump to the specified path.
8	WRITE, write specified parameters to the specified path.
A	INDEX, rotary axis position control (index position control)

ASDA-Soft provides a graphical interface for easier PR path editing, including the options of command triggering, command types, and other properties.

7.1.1 Shared parameters for PR paths

The servo drive provides 16 sets of acceleration / deceleration time settings (P5.020 - P5.035), 16 sets of delay time settings (P5.040 - P5.055), and 16 sets of target speed settings (P5.060 - P5.075) for you to use when setting the PR paths (as shown in Figure 7.1.1.1). If you change a parameter that is used by multiple PR paths, then all PR paths using this parameter are changed as well. For example, if multiple PR paths use the setting of P5.060 as the target speed, when you change the setting of P5.060, the target speed settings of those PR paths are changed as well. Be aware of this when setting the PR paths to avoid any danger or damage to the machine.

The **PR Mode Setting** function in ASDA-Soft provides a user-friendly screen for setting the shared parameters (see Figure 7.1.1.2). Among the data, the acceleration / deceleration time indicates the time duration required for the motor to accelerate from 0 to 3000 rpm or to decelerate from 3000 rpm to 0. For instance, when the acceleration time is set to 50 ms, the required acceleration time is 50 ms if the target speed for the motion command is 3000 rpm, and the required acceleration time is 25 ms if the target speed for the motion command is 1500 rpm. The acceleration / deceleration time setting is like a fixed slope, which does not change when you change the target speed settings.

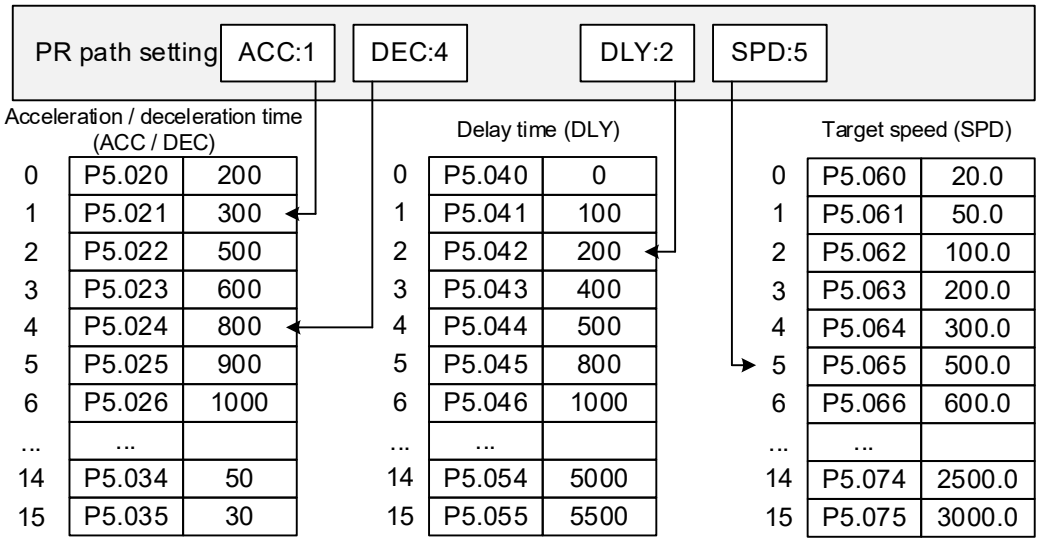

0	P5.020	200
1	P5.021	300
2	P5.022	500
3	P5.023	600
4	P5.024	800
5	P5.025	900
6	P5.026	1000
...	...	
14	P5.034	50
15	P5.035	30

0	P5.040	0
1	P5.041	100
2	P5.042	200
3	P5.043	400
4	P5.044	500
5	P5.045	800
6	P5.046	1000
...	...	
14	P5.054	5000
15	P5.055	5500

0	P5.060	20.0
1	P5.061	50.0
2	P5.062	100.0
3	P5.063	200.0
4	P5.064	300.0
5	P5.065	500.0
6	P5.066	600.0
...	...	
14	P5.074	2500.0
15	P5.075	3000.0

Figure 7.1.1.1 Shared parameter data for PR paths

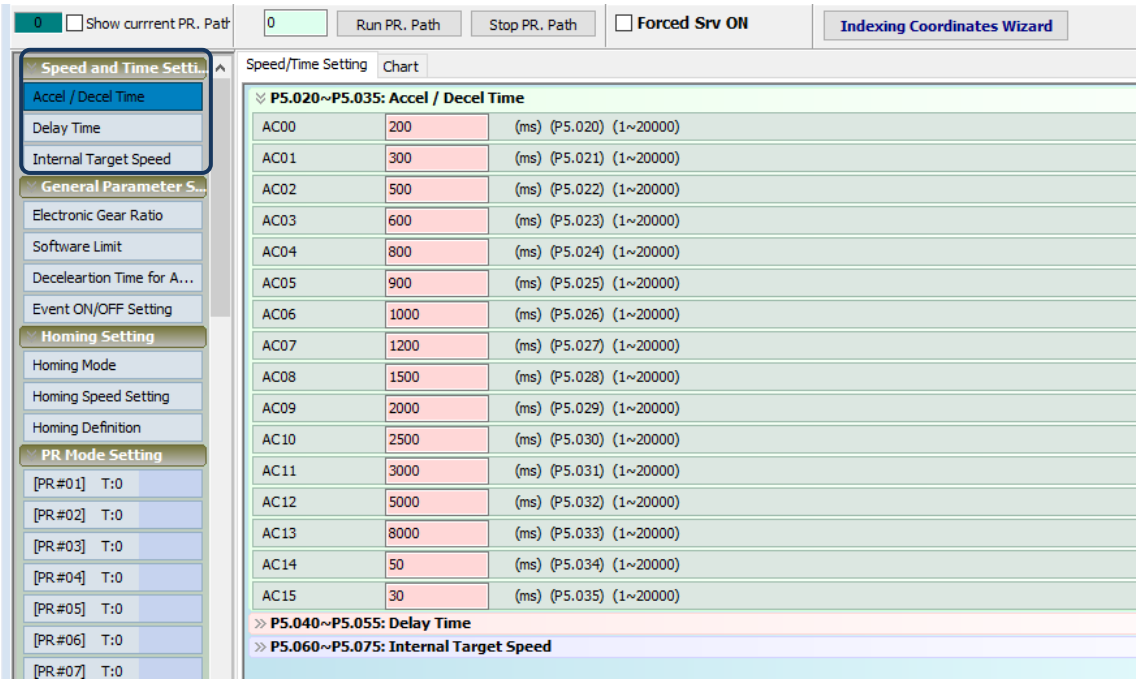

Figure 7.1.1.2 Setting screen of shared parameter data for PR paths in ASDA-Soft

7.1.2 Monitoring variables for PR mode

In PR mode, you can use the four monitoring variables to monitor the servo commands and feedback status: Position command (PUU), Register of PR command endpoint, Position feedback (PUU), and Following error (PUU). These are described as follows:

1. Position command (PUU): monitoring variable code 001, simplified as Cmd_O (Command Operation). This is the motion command generated during servo operation (updated every millisecond), which indicates the target position per scan cycle.
2. Register of PR command endpoint: monitoring variable code 064, simplified as Cmd_E (Command End). This is the target position of a PR position command. When a command is triggered, the servo drive calculates the target position and then updates this register.
3. Position feedback (PUU): monitoring variable code 000, simplified as Fb_PUU (Feedback PUU). This is the current position feedback of the motor encoder.
4. Following error (PUU): monitoring variable code 002, simplified as Err_PUU (Error PUU). This is the difference between Position command (PUU) and Position feedback (PUU).

How these four monitoring variables work is shown in Figure 7.1.2.1. After issuing a Position command, the servo sets the position of Cmd_E once the target position data is acquired. The motor operates to the target position according to the PR path setting. Cmd_O is a dynamic command which calculates the amount of command difference in each fixed scan cycle and sends it to the servo drive. Fb_PUU is the motor encoder position feedback and Err_PUU is the position difference calculated by subtracting Fb_PUU from Cmd_O.

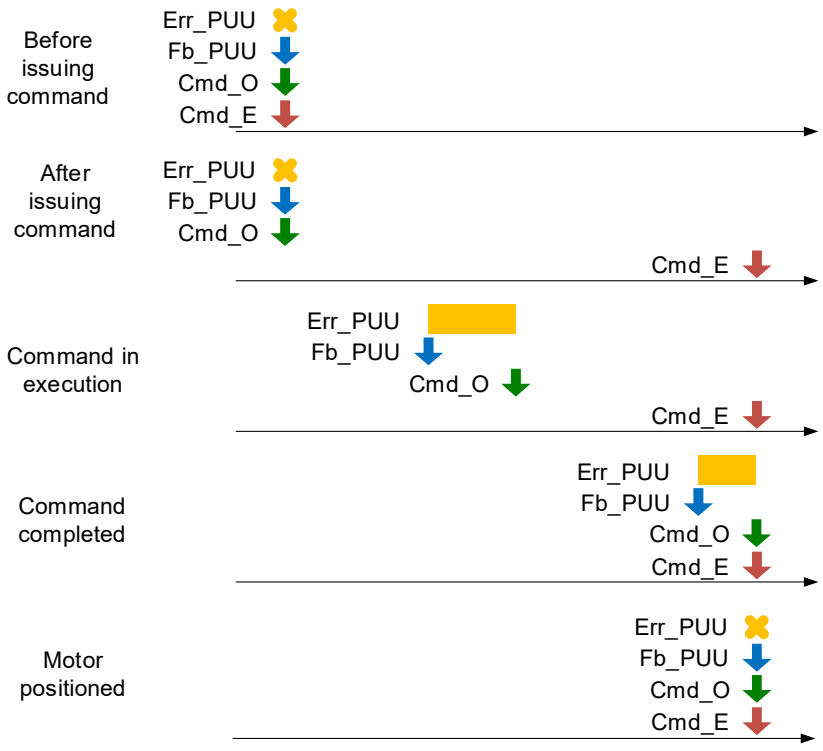

Figure 7.1.2.1 Timing diagram for monitoring variables in PR mode

The behavior of the servo drive during command execution is detailed in Figure 7.1.2.2. Cmd_E is the command endpoint that is set when the PR path is triggered. Fb_PUU is the position feedback, which is the motor's actual position. Here we divide this motion command into scan cycles and take one of the cycles as the example. Cmd_O is the command target of this cycle and Err_PUU is the difference between the command target and the position feedback of this cycle.

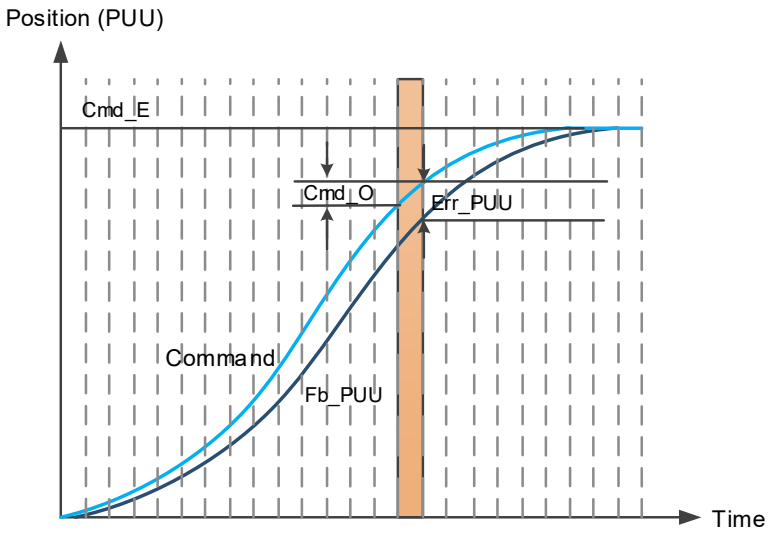

Figure 7.1.2.2 Monitoring variables during command execution in PR mode

You can use digital inputs (DIs) to call PR paths and digital outputs (DOs) to monitor PR paths (refer to Tables 8.1 and 8.2 in Chapter 8 for the DI/O function descriptions). When you trigger a PR path with DI.CTRG (0x08), the servo drive operates according to the command from the internal registers. Once the command is complete, DO.Cmd_OK (0x15) is set to On. When the motor reaches the target position, DO.TPOS (0x05) is set to On. When both DO.Cmd_OK (0x15) and DO.TPOS (0x05) are On, the servo sets DO.MC_OK (0x17) to On to signify that it has completed this PR path. The operation is as shown in Figure 7.1.2.3.

If you have set a delay time in this PR path, when the motor reaches the target position, DO.TPOS (0x05) is set to On. After the delay time is over, DO.Cmd_OK (0x15) is set to On. When both of the DO signals are On, the servo sets DO.MC_OK (0x17) to On to signify that it has completed this PR path. The operation is as shown in Figure 7.1.2.4.

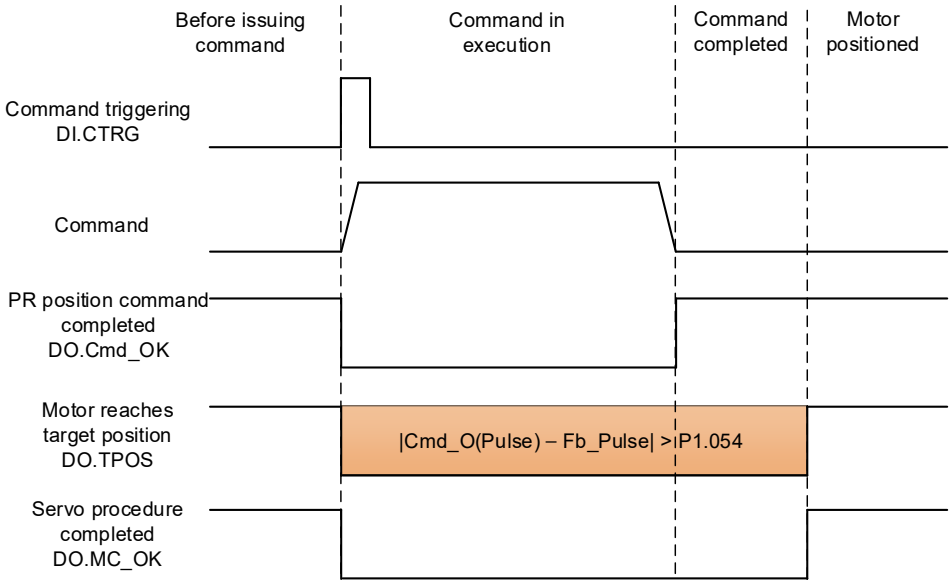

Figure 7.1.2.3 Operation of DI/DO signals in PR mode

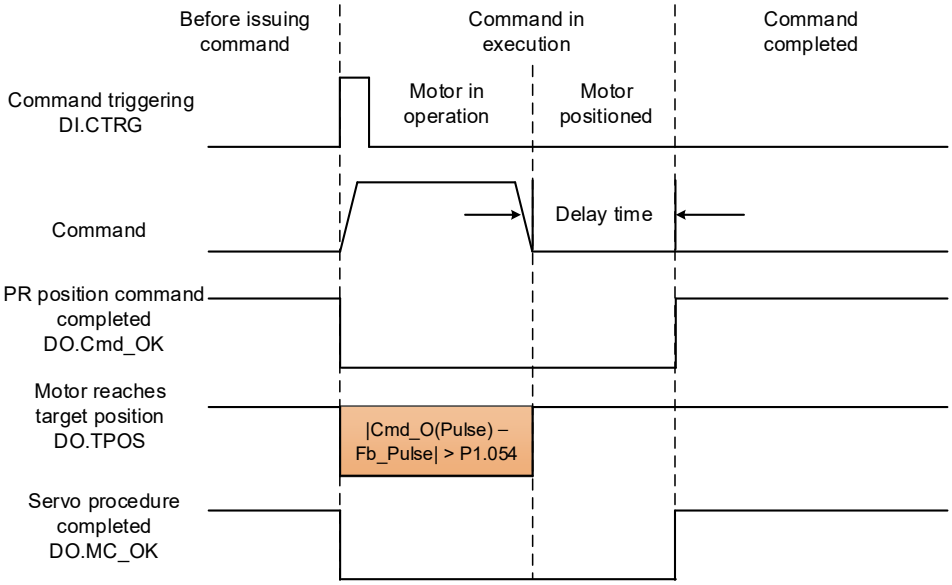

Figure 7.1.2.4 Operation of DI/DO signals in PR mode (including delay time)

7.1.3 Motion Control commands

The servo drive provides 64 sets of PR path settings. Apart from the fixed homing command, each PR path can be set as a Speed command, Position command, Jump command, Write command, or Rotary Axis Position (Index Position) command. The following sections detail each command type.

7.1.3.1 Homing methods

The servo drive provides multiple homing methods in PR mode, including referring to the home sensor, limit, and hard stop as the reference origin. They come with sub-options such as whether to refer to the Z pulse and the behavior when the positive / negative limit signal is triggered, with more than 30 combinations available. The homing method is specified by P5.004 and the homing definition is determined by P6.000. The following lists the function of each bit.

P5.004	**Homing methods**		**Address: 0508H 0509H**
Default:	0x0000	Control mode:	PR
Unit:	-	Setting range:	0x0000 to 0x012A
Format:	HEX	Data size:	16-bit
Model:	E3C-L, E3C-L1		

Settings:



Definition of each setting value:

U	Z	Y	X
Reserved	Limit setting	Z pulse setting	Homing method
-	0 to 1	0 to 2	0 to A
	-	Y = 0: reverse to Z pulse Y = 1: go forward to Z pulse Y = 2: do not look for Z pulse	X = 0: homing in forward direction and define the positive limit as the homing origin
			X = 1: homing in reverse direction and define the negative limit as the homing origin
	When reaching the limit: Z = 0: show error Z = 1: reverse direction		X = 2: homing in forward direction, ORG: OFF→ON as the homing origin
			X = 3: homing in reverse direction, ORG: OFF→ON as the homing origin
		-	X = 4: look for Z pulse in forward direction and define it as the homing origin
			X = 5: look for Z pulse in reverse direction and define it as the homing origin
		Y = 0: reverse to Z pulse Y = 1: go forward to Z pulse Y = 2: do not look for Z pulse	X = 6: homing in forward direction, ORG: ON→OFF as the homing origin
			X = 7: homing in reverse direction, ORG: ON→OFF as the homing origin
	-	-	X = 8: define current position as the origin
	When reaching the limit: Z = 0: show error Z = 1: reverse direction	Y = 0: reverse to Z pulse Y = 2: do not look for Z pulse	X = 9: torque homing in forward direction
			X = A: torque homing in reverse direction

P6.000	Homing definition		Address: 0600H 0601H
Default:	0x00000000	Control mode:	PR
Unit:	-	Setting range:	0x00000000 to 0xFFFFFF3F
Format:	HEX	Data size:	32-bit
Model:	E3C-L, E3C-L1		

7

Settings:

High word



D C B A

Low word



U Z YX

A	DEC2: deceleration time selection for second homing	YX	PATH: path type
B	DLY: delay time selection	Z	ACC: acceleration time selection
C	Reserved	U	DEC1: deceleration time selection for first homing
D	BOOT: whether to execute homing automatically when the drive is powered on	-	-

- YX: PATH: path type

  0x00: Stop: the servo stops after homing is complete

  0x01 - 0x3F: AUTO: the servo executes the specified path (PR#01 - PR#63) after homing is complete

- Z: ACC: acceleration time selection

  0 - F: correspond to P5.020 - P5.035

- U: DEC1: deceleration time selection for first homing

  0 - F: correspond to P5.020 - P5.035

- A: DEC2: deceleration time selection for second homing

  0 - F: correspond to P5.020 - P5.035

- B: DLY: delay time selection

  0 - F: correspond to P5.040 - P5.055

- D: BOOT: whether to execute homing automatically when the drive is powered on

  0: do not execute homing

  1: execute homing automatically (servo switches to On for the first time after power is applied)

The PR Homing mode includes the function for setting the origin offset. You can define any point in the position system as the reference origin, which does not have to be 0. Once you define the reference origin, the position system of the motion axis can be established.

See Figure 7.1.3.1.1. The position of the reference origin is 2000 (P6.001 = 2000). The motor passes by the reference origin and then stops at the position of 1477. According to the position system that it established, the system automatically calculates the position of 0 (origin). Then the motor can move to any specified position as soon as a PR path is issued.

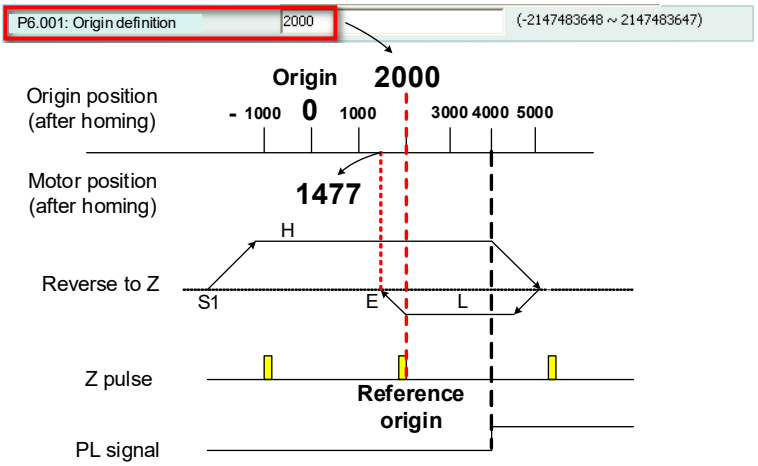

Figure 7.1.3.1.1 Origin definition

P6.001	Origin definition		Address: 0602H 0603H
Default:	0	Control mode:	PR
Unit:	-	Setting range:	-2147483648 to +2147483647
Format:	DEC	Data size:	32-bit
Model:	E3C-L, E3C-L1		

Settings:

Origin definition.

The homing procedure goes through two stages: high speed and low speed. The servo starts the homing procedure at high speed to seek the reference point (such as the limit switch or ORG signal), which takes a shorter time. Once the servo detects the reference point, the motor runs at low speed to find the reference point (such as the Z pulse) accurately. The speeds for the two stages are defined by P5.005 and P5.006.

7

P5.005	High speed homing (first speed setting)			Address: 050AH 050BH
Operation interface:	Panel / software	Communication	Control mode:	PR (set with P5.004)
Default:	100.0	1000	Data size:	32-bit
Unit:	1 rpm	0.1 rpm	-	-
Setting range:	0.1 to 2000.0	1 to 20000	-	-
Format:	DEC	DEC	-	-
Model:	E3C-L, E3C-L1			

Settings:

The first speed setting for high speed homing.

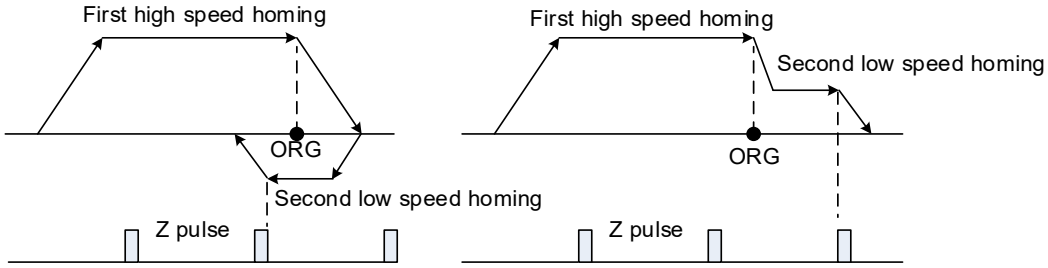

P5.006	Low speed homing (second speed setting)			Address: 050CH 050DH
Operation interface:	Panel / software	Communication	Control mode:	PR (set with P5.004)
Default:	20.0	200	Data size:	32-bit
Unit:	1 rpm	0.1 rpm	-	-
Setting range:	0.1 to 500.0	1 to 5000	-	-
Format:	DEC	DEC	-	-
Model:	E3C-L, E3C-L1			

Settings:

The second speed setting for low speed homing.

You can set the homing parameters in the PR mode **Homing Setting** screen in ASDA-Soft, including the Homing Mode, Homing Speed Setting, and Homing Definition (see Figure 7.1.3.1.2).

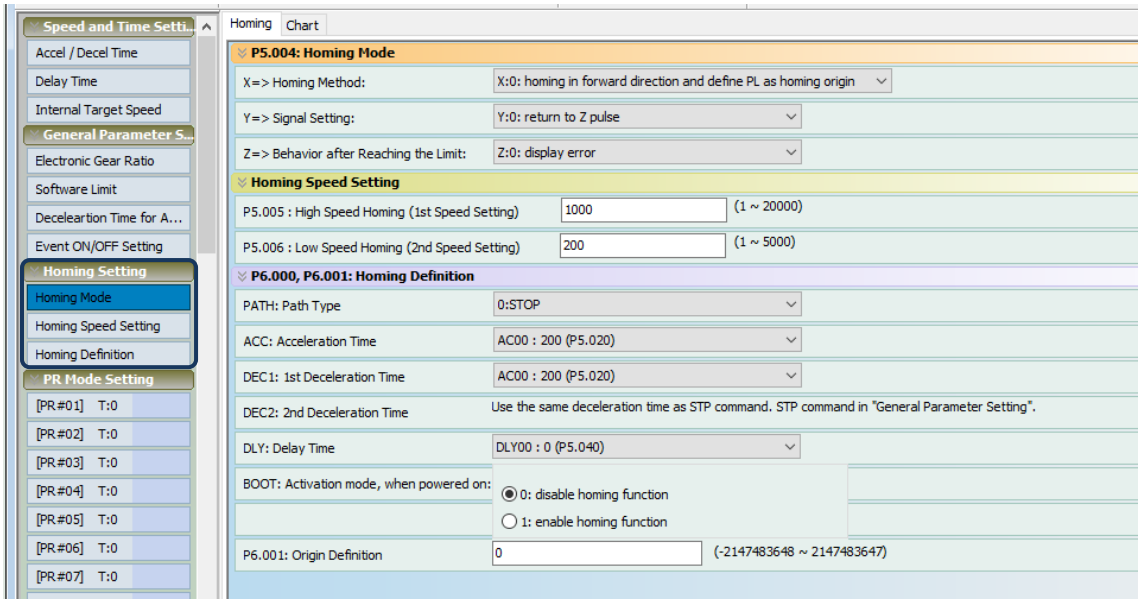

Figure 7.1.3.1.2 Homing Setting screen in ASDA-Soft

The following describes the homing methods supported by the servo drive. They can be categorized into six types based on their reference points.

1. Referencing the limit.

   This method uses the positive or negative limit as the reference point. You can set whether or not to look for the Z pulse and use it as the reference origin after the limit is detected. The searching result is the same regardless of where the start point is. The servo drive always looks for the set reference point to reset the motor position.

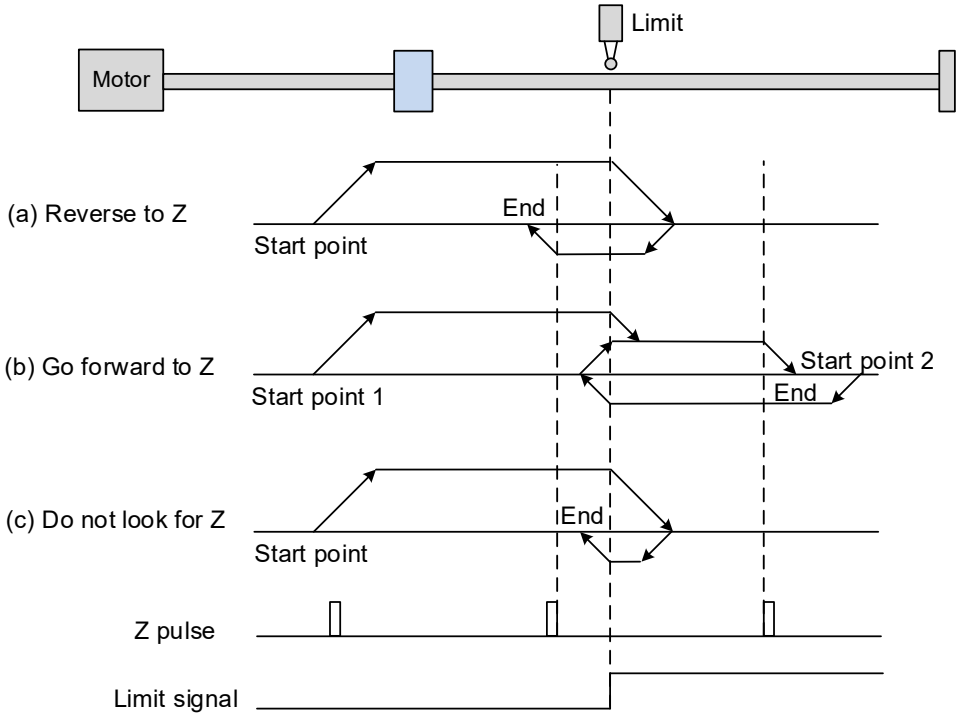

(a) If you set the servo to look for the Z pulse in the reverse direction, the servo operates at high speed (first speed setting) then decelerates once reaching the limit (rising-edge triggered). Then the servo switches to low speed (second speed setting) to look for the Z pulse in the reverse direction. When the servo finds the Z pulse, it decelerates to a stop, completing the homing procedure.

7

(b) If you set the servo to look for the Z pulse in the forward direction and the limit signal at the start position is un-triggered (low, Start point 1), the servo operates at high speed (first speed setting) then decelerates once reaching the limit (rising-edge triggered). Then the servo switches to low speed (second speed setting) to look for the Z pulse in the forward direction. When the servo finds the Z pulse, it decelerates to a stop, completing the homing procedure.

If you set the servo to look for the Z pulse in the forward direction and the limit signal at the start position is triggered (high, Start point 2), the servo operates at low speed (second speed setting) in the reverse direction to look for the rising-edge limit signal. Then the servo starts to look for the Z pulse in the forward direction once reaching the limit (rising-edge triggered). When the servo finds the Z pulse, it decelerates to a stop, completing the homing procedure.

According to the examples, regardless of the start positions, the origin position after homing is the same under the same setting condition.

(c) If you set the servo to not look for the Z pulse, the servo operates at high speed (first speed setting) then decelerates once reaching the limit (rising-edge triggered). Then the servo switches to low speed (second speed setting) in the reverse direction to look for the rising-edge limit signal. When the servo finds the rising-edge signal, it decelerates to a stop, completing the homing procedure.

2. Referencing the rising edge of the home sensor (ORG) signal.
   This method uses the rising edge of the ORG signal as the reference origin. You can set whether or not to use the Z pulse as the reference origin after the ORG signal is detected.

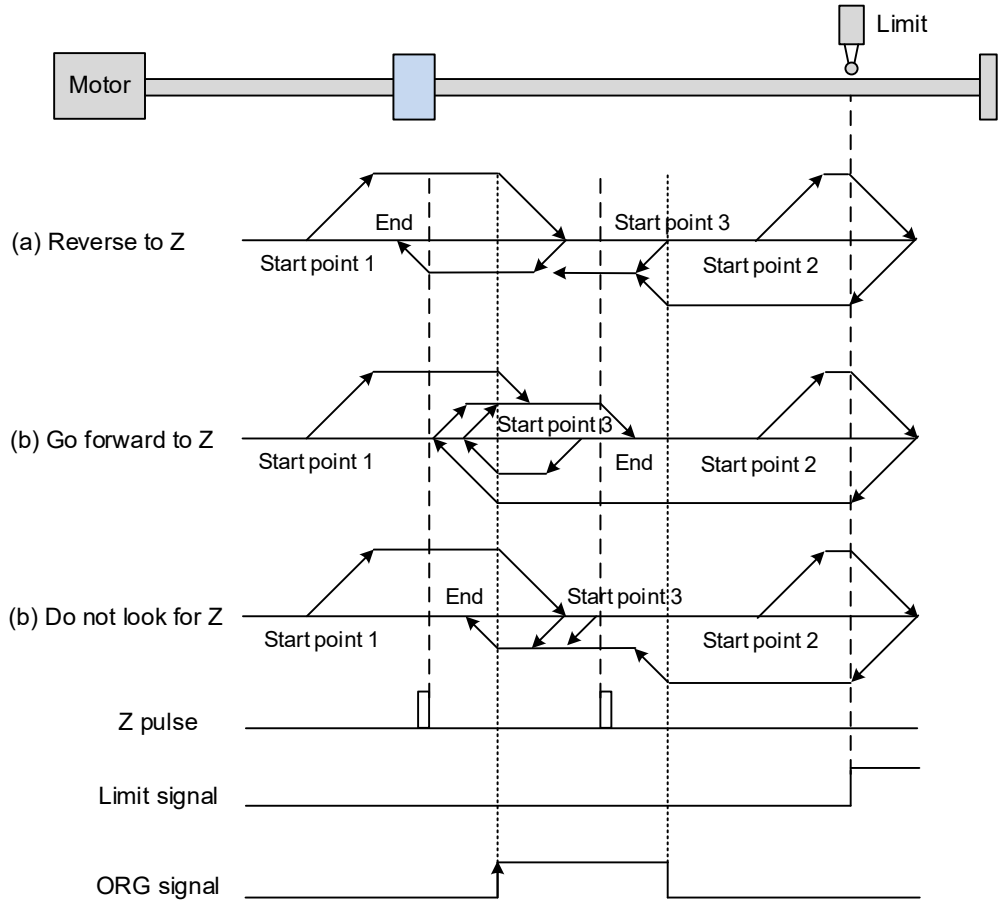

(a) If you set the servo to look for the Z pulse in the reverse direction, when the ORG signal at the start point is un-triggered (low, Start point 1), the servo operates at high speed (first speed setting) then decelerates once reaching the ORG signal (rising-edge triggered). Then it operates in the reverse direction at a low speed (second speed setting) until the ORG signal switches to low. Next, the servo starts to look for the Z pulse in the reverse direction. When the servo finds the Z pulse, it decelerates to a stop, completing the homing procedure.

If the ORG signal at the start point is un-triggered (low, Start point 2) and the start point is relatively closer to the limit switch, the servo operates at high speed (first speed setting) until reaching the limit switch. You can set whether to show an error or reverse the direction when the servo reaches the limit switch. If you set the servo to reverse direction, it reverses to reach the ORG signal, and then decelerates and operates at low speed (second speed setting) until the ORG signal switches to low. Next, the servo starts to look for the Z pulse. When the servo finds the Z pulse, it decelerates to a stop, completing the homing procedure.

If the ORG signal at the start point is triggered (high, Start point 3), the servo operates in the reverse direction at a low speed (second speed setting) until the ORG signal switches to low. Next, the servo continues to look for the Z pulse. When the servo finds the Z pulse, it decelerates to a stop, completing the homing procedure.

7

(b) If you set the servo to look for the Z pulse in the forward direction or not to look for the Z pulse (this is similar to method (a) Reverse to Z), refer to the preceding timing diagram.

3. Referencing the Z pulse.
   This method uses the Z pulse as the reference origin. One Z pulse is generated per motor revolution. This method is only suitable when the operation is kept within one motor revolution.

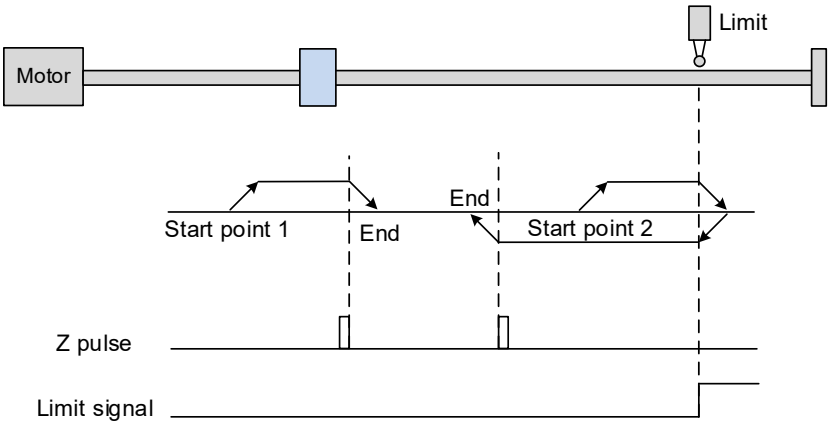

4. Referencing the falling edge of the home sensor (ORG) signal.
   This method uses the falling edge of the ORG signal as the reference origin. You can set whether or not to use the Z pulse as the reference origin after the ORG signal is detected.

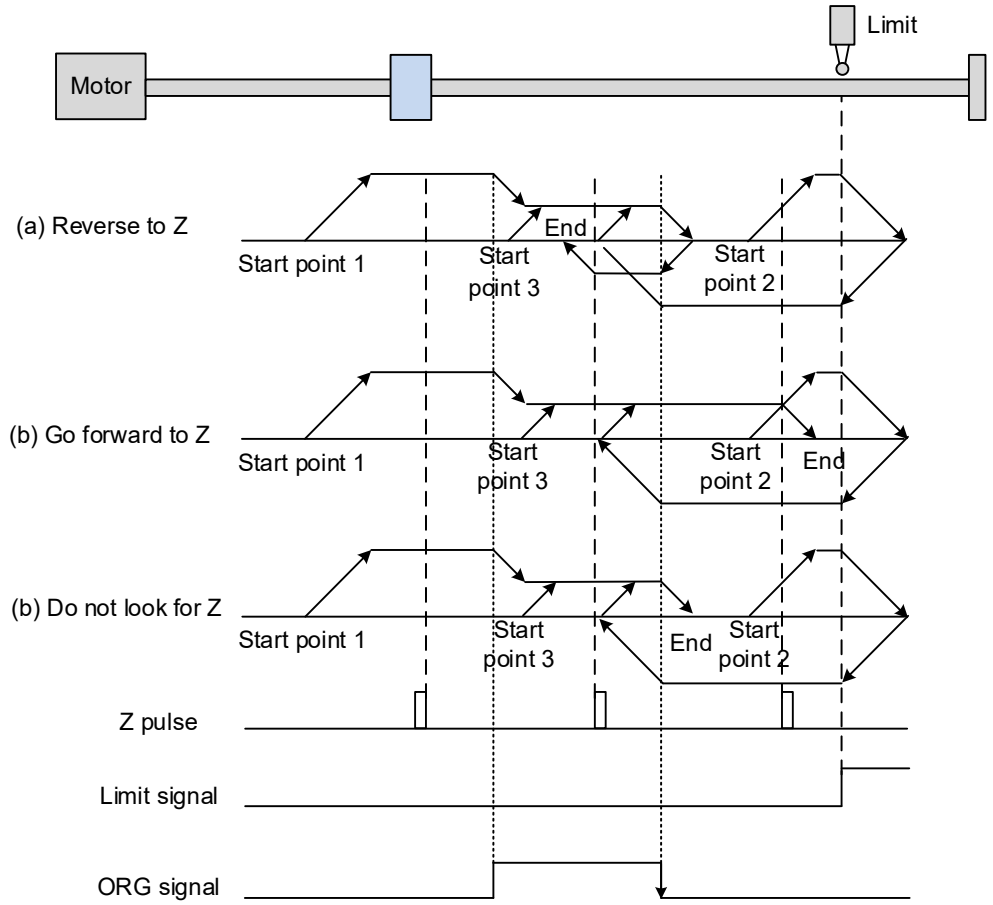

(a) If you set the servo to look for the Z pulse in the reverse direction, when the ORG signal at the start point is un-triggered (low, Start point 1), the servo operates at high speed (first speed setting) until reaching the rising edge of the ORG signal. Then it decelerates and switches to low speed (second speed setting) until the ORG signal switches to low. Next, the servo reverses to look for the Z pulse. When the servo finds the Z pulse, it decelerates to a stop, completing the homing procedure.

If the ORG signal at the start point is un-triggered (low, Start point 2) and the start position is relatively closer to the limit switch, the servo operates at high speed (first speed setting) until reaching the limit switch. You can set whether to show an error or reverse the direction when the servo reaches the limit switch. If you set the servo to reverse direction, it reverses to reach the ORG signal, and then decelerates and operates in the forward direction to reach the falling edge of the ORG signal. Next, the servo operates in the reverse direction at a low speed (second speed setting) to look for the Z pulse. When the servo finds the Z pulse, it decelerates to a stop, completing the homing procedure.

If the ORG signal at the start point is triggered (high, Start point 3), the servo operates at low speed (second speed setting) in the forward direction until the ORG signal switches to low. Next, the servo reverses to look for the Z pulse. When the servo finds the Z pulse, it decelerates to a stop, completing the homing procedure.

7

(b) If you set the servo to look for the Z pulse in the forward direction or not to look for the Z pulse (this is similar to method (a) Reverse to Z), refer to the preceding timing diagram.

5. Referencing the current position as the origin.
   This method uses the motor's current position as the reference origin. As long as the homing procedure is triggered and the motor remains still, then motor positioning is complete.

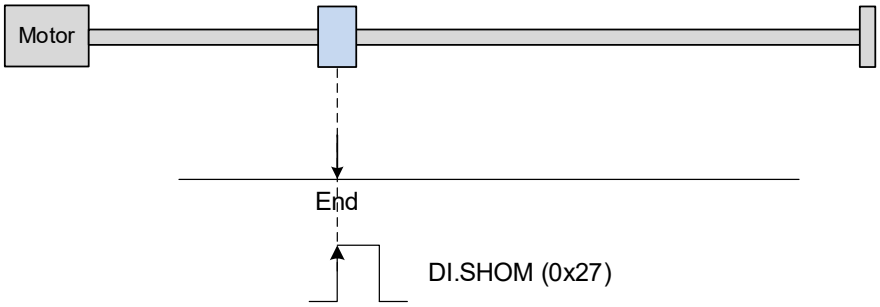

6. Torque homing mode.

   This method uses the motor's stop position as the reference origin by referring to: the limit on the mechanical parts, the torque level detection (P1.087), and the level reached timer (P1.088). You can also set whether or not to use the Z pulse as the reference origin.

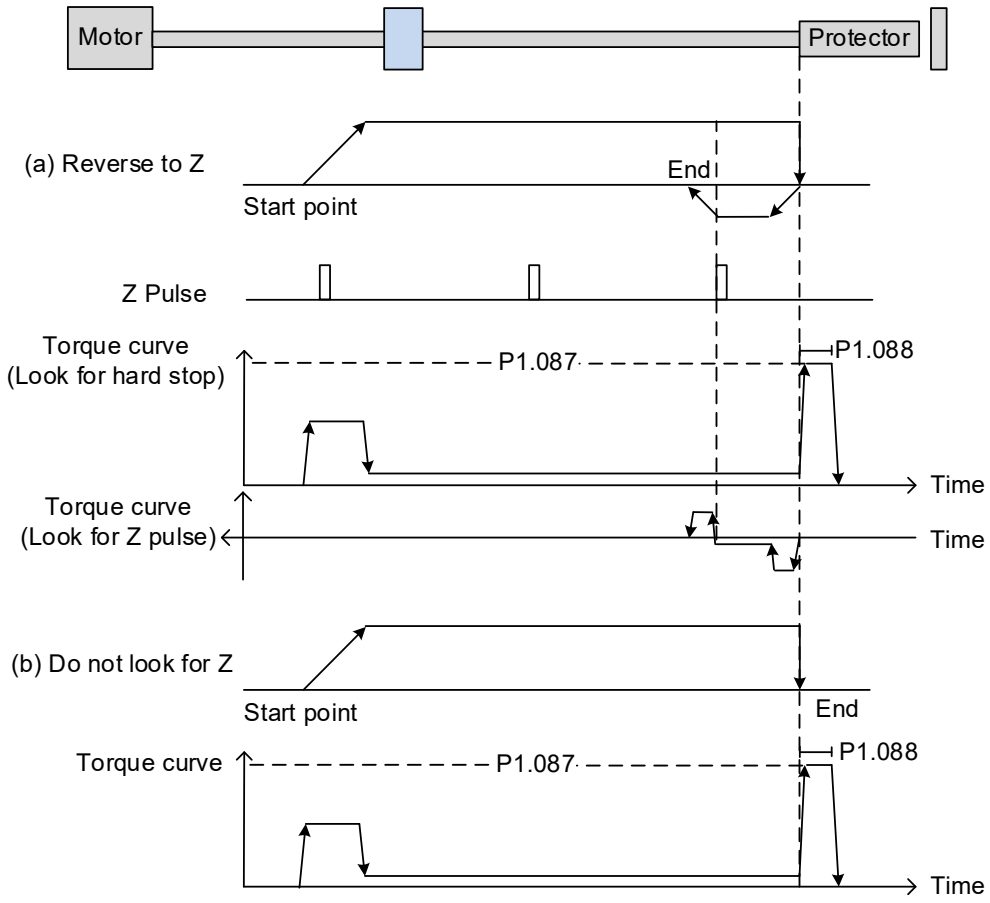

(a) If you set the servo to look for the Z pulse in the reverse direction, the servo outputs a greater current to counter the external force once it touches the protector at high speed (first speed setting). When the motor torque reaches the torque level detection (P1.087) and the output duration is longer than the level reached timer setting (P1.088), the servo operates in the reverse direction at a low speed (second speed setting) to look for the Z pulse. When the servo finds the Z pulse, it decelerates to a stop, completing the homing procedure.

(b) If you set the servo to not look for the Z pulse, the servo outputs a greater current to counter the external force once it touches the protector at high speed (first speed setting). When the motor torque reaches the torque level detection (P1.087) and the output duration is longer than the level reached timer setting (P1.088), the servo stops, completing the homing procedure.

Pay special attention when executing the Torque homing procedure. The motor's actual maximum torque output is 10% greater than the torque level detection setting (P1.087); excessive impact may cause damage to the machine.

7

The following tables describe the settings for the torque level detection (P1.087) and the level reached timer (P1.088).

P1.087	Torque homing - torque level detection		Address: 01AEH 01AFH
Default:	1	Control mode:	PR
Unit:	%	Setting range:	1 to 300
Format:	DEC	Data size:	16-bit
Model:	E3C-L, E3C-L1		

Settings:

This setting is only for the torque homing mode. As shown in the following figure, after homing is triggered, the motor runs in one direction and the mechanical part reaches the protector. The servo drive then outputs a larger motor current in order to counter the external force. The servo drive uses P1.087 and P1.088 as the conditions for homing. Since the hard stops are not always the same, it is recommended that you have the servo reverse to find the Z pulse as the origin.

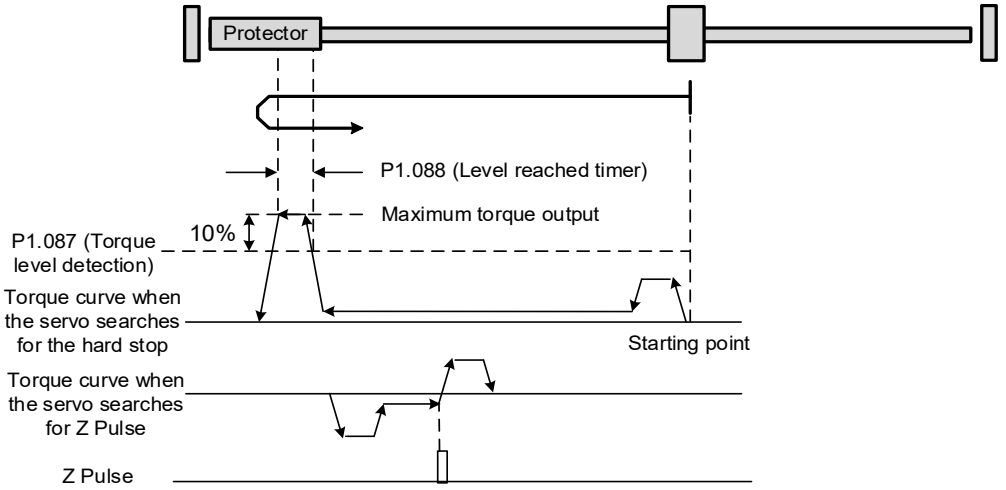

Important: the actual maximum torque output of the motor is 10% greater than the detected torque level (P1.087). For example, when you set P1.087 to 50%, the maximum torque output of the motor is 60%.

P1.088	Torque homing - level reached timer		Address: 01B0H 01B1H
Default:	2000	Control mode:	PR
Unit:	ms	Setting range:	2 to 2000
Format:	DEC	Data size:	16-bit
Model:	E3C-L, E3C-L1		

Settings:

The setting of the **torque level reached timer** for the torque homing mode. If the motor torque output continues to exceed the level set by P1.087 and the duration exceeds this setting, the homing is complete. Refer to P1.087 for the timing diagram of torque homing mode.

As mentioned in Section 7.1.2, in PR mode, you can use the four monitoring variables to monitor the servo commands and feedback status: Position command (PUU) (Cmd_O), Register of PR command endpoint (Cmd_E), Position feedback (PUU) (Fb_PUU), and Following error (PUU) (Err_PUU). Since the position system is not established before homing is complete, the target position remains unknown and thus Cmd_E cannot be calculated. This is why the changes of the monitoring variables in Homing mode (Figure 7.1.3.1.3) are different from those when the servo issues the PR position command (Figure 7.1.2.1). In Homing mode, the content of Cmd_E is identical to that of Cmd_O at default setting. After the servo finds the reference origin and establishes the position system, it sets the content of Cmd_E to the position of the reference origin. However, once the servo finds the reference origin, the motor still requires some distance to decelerate to a stop. Meanwhile, Cmd_O continues to issue the commands. If no other PR paths are issued after the PR homing command, unlike the condition where the servo issues the PR position command, the final contents of Cmd_O and Cmd_E in Homing mode will be different. See Figure 7.1.3.1.3.

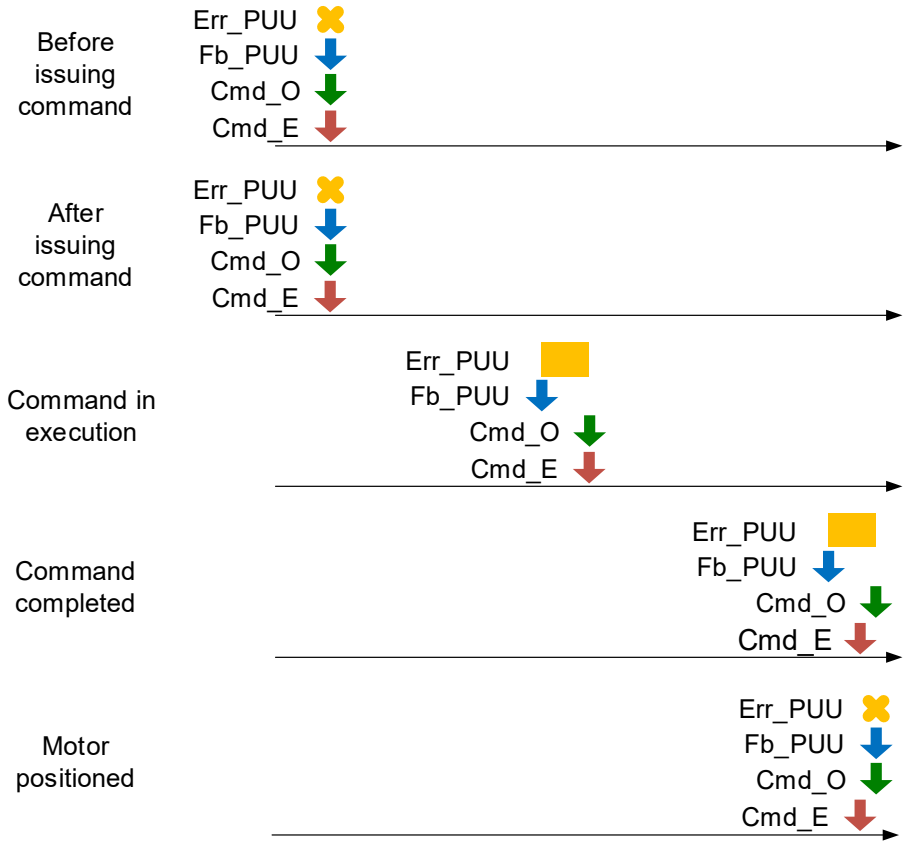

Figure 7.1.3.1.3 Timing diagram for monitoring variables in Homing mode

7.1.3.2 Speed command

The PR mode includes a speed control command. The following parameters are available for setting the PR speed command: acceleration / deceleration time, delay time, and target speed. You can easily set the Speed command by selecting **[1]: Constant speed control** for the TYPE settings in the **PR Mode Setting** screen of ASDA-Soft. See Figure 7.1.3.2.1.

- INS is the interrupt function that allows the next PR path to interrupt the previous PR path. Refer to Section 7.1.6 for more details.
- AUTO is the function that automatically loads and executes the next PR path when the current PR path completes.
- UNIT is the unit setting for the target speed, with options of 0.1 rpm and 1 PPS, and the setting range is -6000 rpm to +6000 rpm.
- ACC / DEC is the acceleration / deceleration time determined by the shared parameters. The software calculates and displays the required duration for the motor to accelerate from 0 to the target speed or to decelerate from the target speed to 0.
- DLY is the delay time determined by the shared parameters. It is defined by the command from the controller; in other words, once the target speed is reached, the servo drive starts counting the delay time.

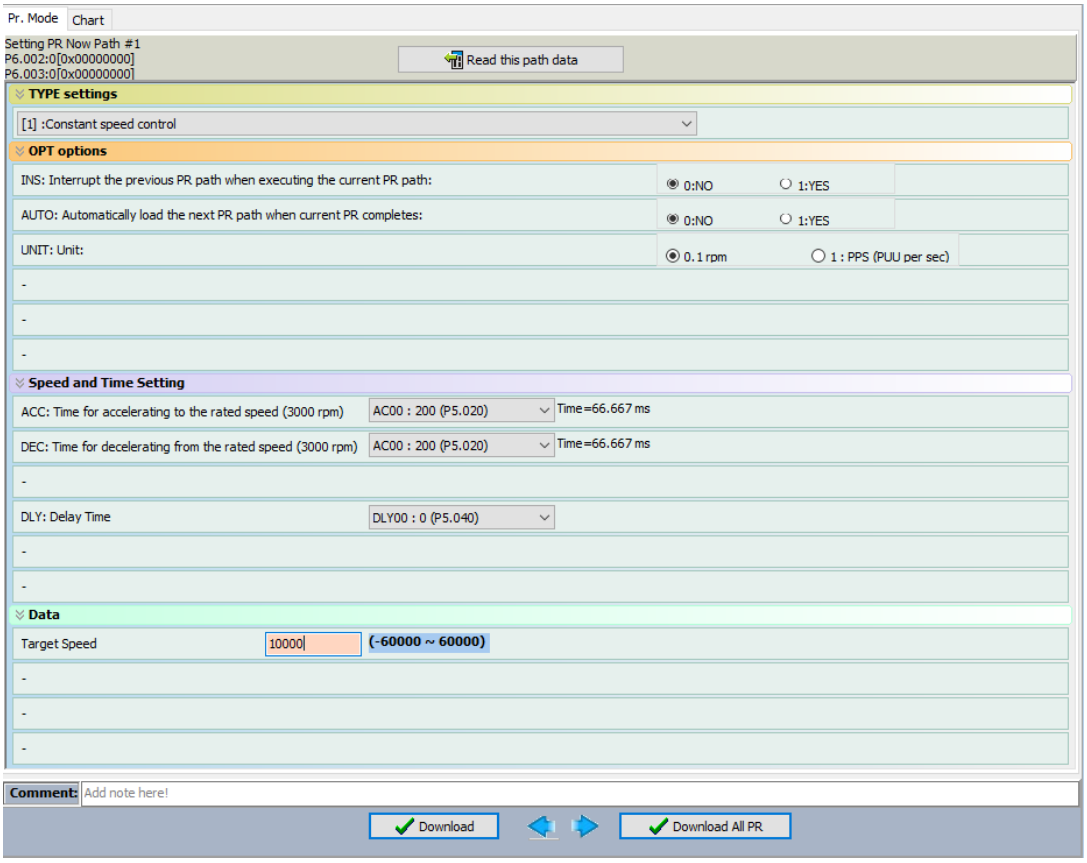

Figure 7.1.3.2.1 PR mode Speed control screen in ASDA-Soft

See Figure 7.1.3.2.2 for the effects of the parameters for the PR mode speed control.

Table 7.1.3.2.1 shows the bit functions when Speed command is in operation.

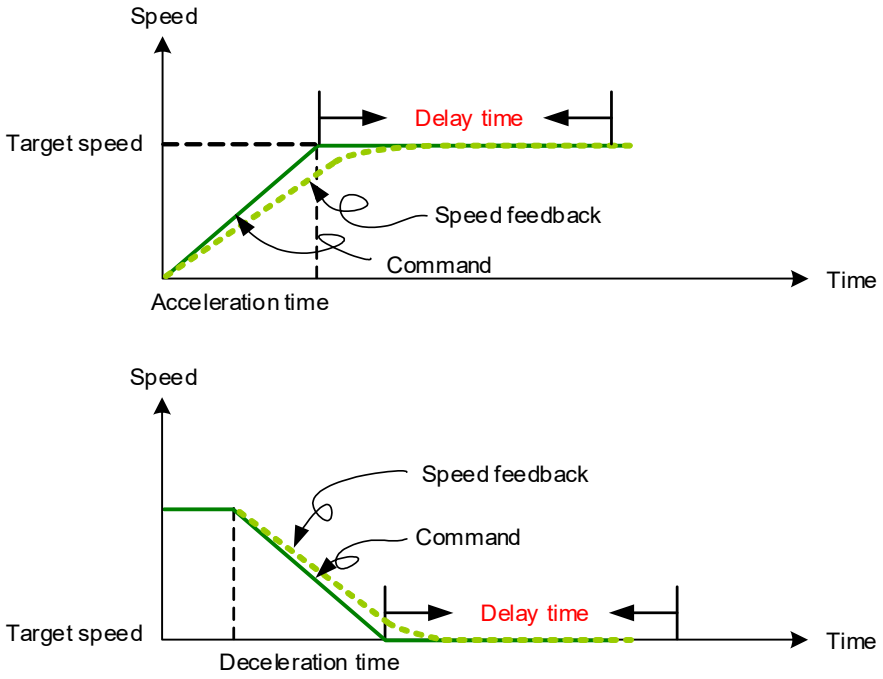

Figure 7.1.3.2.2 Parameters for PR mode speed control

Table 7.1.3.2.1 Bit functions of PR speed control

PR parameters	D	C	B	A	U	Z	Y	X
Property	-	-	DLY	-	DEC	ACC	OPT	1
Data content	Target speed [0.1 rpm / PPS]							

Note:

1. X: 1: SPEED, constant speed control
2. Y: OPT, option

Bit	7	6	5	4
Property	-	UNIT	AUTO	INS

INS: interrupts the previous path when the current path is executed.
AUTO: once current PR path is finished, automatically loads the next path.
UNIT: speed unit selection; 0 = 0.1 rpm and 1 = PPS.

3. Z, U: ACC / DEC, acceleration / deceleration time, set by P5.020 - P5.035.
4. B: DLY, delay time, set by P5.040 - P5.055.

7.1.3.3 Position command

The PR mode includes two types of position control commands: **[2]: Point-to-Point Command** and **[3]: Point-to-Point Command (Proceed to the next path when completed)**. The way to set these two types of commands is the same. You can easily set the Position command in the **PR Mode Setting** screen of ASDA-Soft. Refer to Figure 7.1.3.3.1.

- INS is the interrupt function that allows the next PR path to interrupt the previous PR path. Refer to Section 7.1.6 for more details.
- OVLP is the function that allows the next PR path to overlap the PR path currently being executed during deceleration. If you use this function, setting the delay time to 0 is suggested. Refer to Section 7.1.6 for more details.
- ACC / DEC is the acceleration / deceleration time determined by the shared parameters. The software calculates and displays the required duration for the motor to accelerate from 0 to the target speed or to decelerate from the target speed to 0.
- SPD is the target speed determined by the shared parameters. You can choose whether it is multiplied by 0.1.
- DLY is the delay time determined by the shared parameters. It is defined by the command from the controller; in other words, once the target position is reached, the servo drive starts counting the delay time.
- Position command (Position CMD DATA) is user-defined and in units of PUU.

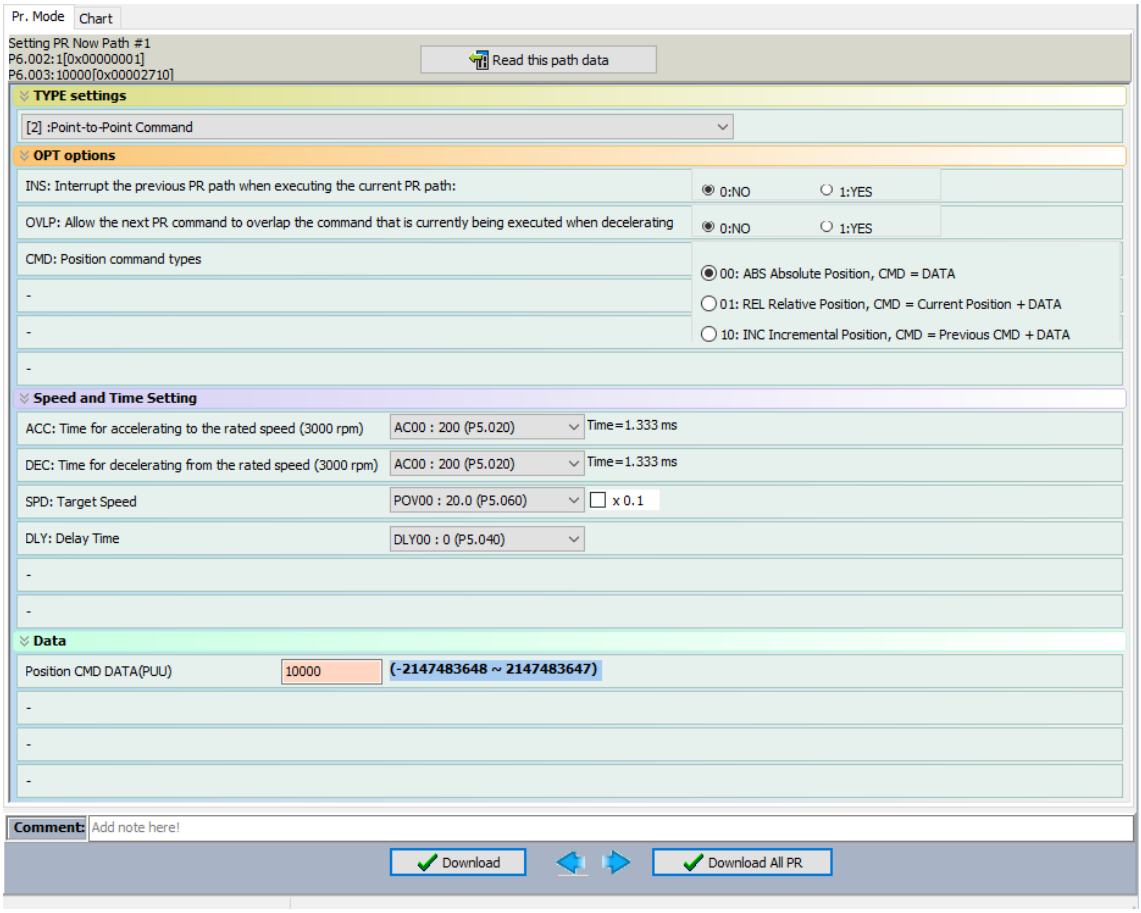

Figure 7.1.3.3.1 PR mode Position control screen in ASDA-Soft

See Figure 7.1.3.3.2 for the effects of the parameters for the PR mode position control.

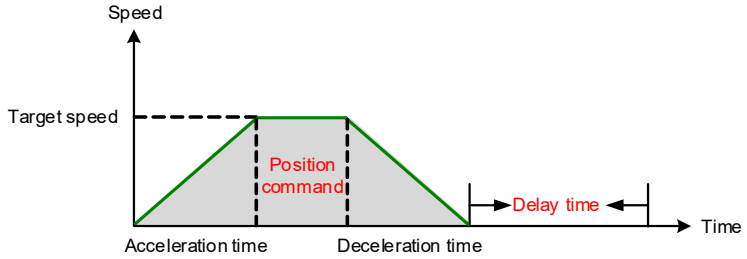

Figure 7.1.3.3.2 Parameters for PR mode position control

The PR mode provides the following types of position commands. You can choose the suitable type of command according to the application requirements. The functions of each type are described in the following examples. Note that the condition in these examples is that a position command is still being executed and a command of another type interrupts. To see the definition of each command type and how the position commands are integrated, refer to Figure 7.1.3.3.3.

1. Absolute position command (ABS): when an absolute command interrupts, the target position value equals the absolute command value. In the following example, an ABS command with the value of 60000 PUU interrupts the previous PR path, so the target position is 60000 PUU in the position system.
2. Relative position command (REL): when a relative command interrupts, the target position value is the motor's current position value plus the position command value. In the following example, a REL command with the value of 60000 PUU interrupts the previous PR path. The target position is the motor's current position (20000 PUU) plus the relative position command (60000 PUU), which equals 80000 PUU in the position system. The target position specified by the previous command is omitted.
3. Incremental position command (INC): when an incremental command interrupts, the target position is the previous target position value plus the current position command value. In the following example, an INC command with the value of 60000 PUU interrupts the previous PR path. The target position is the previous target position value (30000 PUU) plus the relative position command (60000 PUU), which equals 90000 PUU in the position system. The target position specified by the previous command is integrated into the new one.

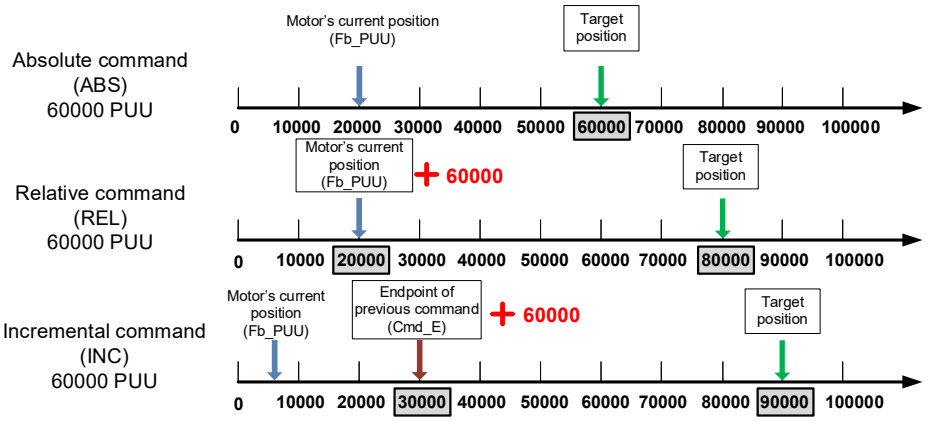

Figure 7.1.3.3.3 Three types of Position command

Table 7.1.3.3.1 shows the bit functions when Position command is in operation.

Table 7.1.3.3.1 Bit functions of PR position control

PR parameters	D	C	B	A	U	Z	Y	X
Property	-	-	DLY	SPD	DEC	ACC	OPT	2 or 3
Data content	Target position [PUU]							

Note:

1. X:
   2: SINGLE, positioning control. It stops once positioning is complete.
   3: AUTO, positioning control. It automatically loads the next path once positioning is complete.
2. Y: OPT, option

Bit	7	6	5	4	Description
Property	CMD		OVLP	INS	-
Data content	0	0	-	-	ABS (absolute positioning)
	0	1			REL (relative positioning)
	1	0			INC (incremental positioning)

   INS: interrupts the previous path when the current path is executed.
   OVLP: allow overlapping of the next command.
   CMD: Position command selection.
3. Z, U: ACC / DEC, acceleration / deceleration time, set by P5.020 - P5.035.
4. A: SPD, target speed, set by P5.060 - P5.075.
5. B: DLY, delay time, set by P5.040 - P5.055.

7.1.3.4 Jump command

The PR mode includes a Jump command. It can call any PR paths or form PR paths into a loop, as shown in Figure 7.1.3.4.1. You can specify the target PR number by selecting **[7]: Jump to the specified path** for the TYPE settings in the **PR Mode Setting** screen of ASDA-Soft (see Figure 7.1.3.4.2).

- INS is the interrupt function that allows the next PR path to interrupt the previous PR path. Refer to Section 7.1.6 for more details.
- DLY is the delay time determined by the shared parameters. Once a Jump command is issued, the servo drive starts counting the delay time.
- Available target PR numbers are PR#00 - PR#63.

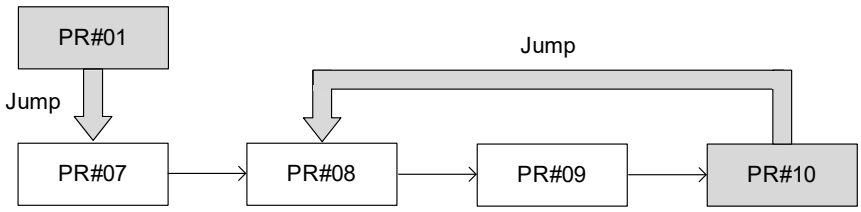

Figure 7.1.3.4.1 Jump command in PR mode

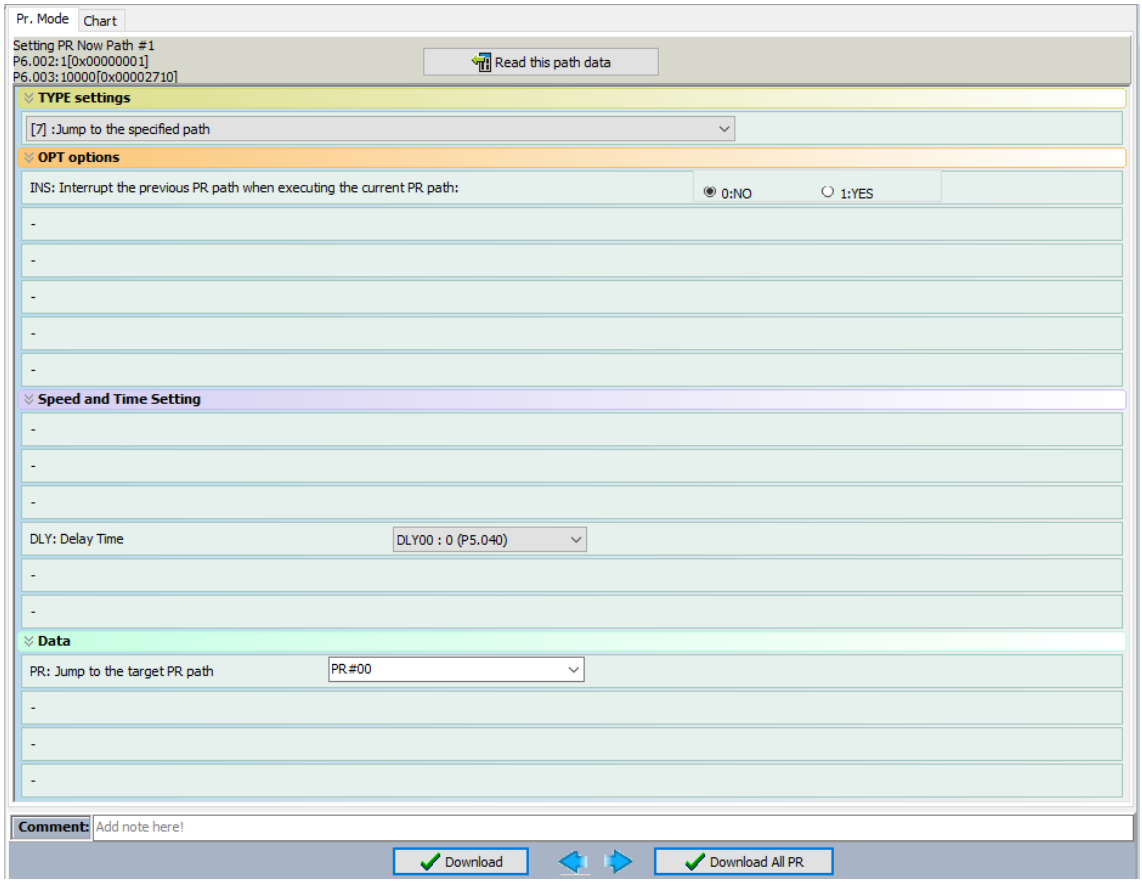

Figure 7.1.3.4.2 PR mode Jump command screen in ASDA-Soft

Table 7.1.3.4.1 shows the bit functions when Jump command is in operation.

Table 7.1.3.4.1 Bit functions of PR Jump command

PR parameters	D	C	B	A	U	Z	Y	X
Property	-	-	DLY	-	-	-	OPT	7
Data content	Jump to target PR path (PR#00 - PR#63)							

Note:
1. X: 7: JUMP, jump to the specified path.
2. Y: OPT, option

Bit	7	6	5	4
Property	-	-	-	INS

INS: interrupts the previous path when the current path is executed.

3. B: DLY, delay time, set by P5.040 - P5.055.

7.1.3.5 Write command

The PR mode includes a Write command. It can write constants, parameters, data arrays, and monitoring variables to the specified parameters or data arrays. You can set the Write command by selecting **[8]: Write to Parameters or Data Array** for the TYPE settings in the **PR Mode Setting** screen of ASDA-Soft (see Figure 7.1.3.5.1).

- INS is the interrupt function that allows the next PR path to interrupt the previous PR path. Refer to Section 7.1.6 for more details.
- AUTO is the function that automatically loads and executes the next PR path when the current PR path completes.
- ROM is the function that writes parameters to both RAM and EEPROM at the same time for the parameter settings to be non-volatile; however, frequent writing shortens the lifetime of the EEPROM.
- DLY is the delay time determined by the shared parameters. Once a Write command is issued, the servo drive starts counting the delay time.
- Writing target (Target) and data source (Written Data):

Writing target	Data source
Parameter	Constant
Data array	Parameter
-	Data array
-	Monitoring variable

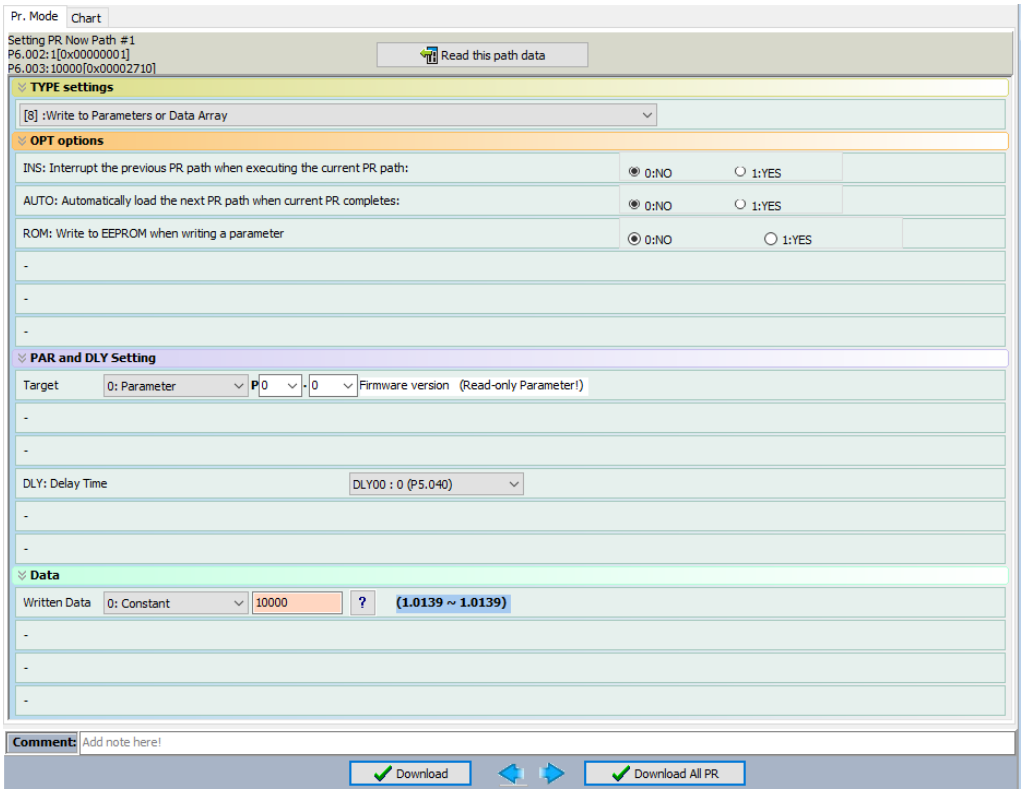

Figure 7.1.3.5.1 PR mode Write command screen in ASDA-Soft

7

Table 7.1.3.5.1 shows the bit functions when Write command is in operation.

Table 7.1.3.5.1 Bit functions of PR Write command

PR parameters	D	C	B	A	U	Z	Y	X
Property	0	SOUR_DEST	DLY	DESTINATION			OPT	8
Data content	SOURCE							

Note:

1. X: 8: WRITE, write specified parameters to the specified path.
2. Y: OPT, option

Bit	7	6	5	4
Property	-	ROM	AUTO	INS

INS: interrupts the previous path when the current path is executed.
AUTO: once current PR path is finished, automatically loads the next path.
ROM: write data to RAM and EEPROM at the same time. This function can only write parameters.

3. B: DLY, delay time, set by P5.040 - P5.055.
4. C: SOUR_DEST, data source and writing target.

Bit	27	26	25	24	Description	
Property	SOUR		-	DEST	Data source	Writing target
Data content	0	0	0	0	Constant	Parameter
	0	1		0	Parameter	Parameter
	1	0		0	Data array	Parameter
	1	1		0	Monitoring variable	Parameter
	0	0		1	Constant	Data array
	0	1		1	Parameter	Data array
	1	0		1	Data array	Data array
	1	1		1	Monitoring variable	Data array

5. Z, U, A: DESTINATION, writing target setting

	A	U	Z
Writing target: parameter	Parameter group	Parameter number	
Writing target: data array	Data array number		

6. SOURCE: data source setting

	D	C	B	A	U	Z	Y	X
Data source: constant	Constant data							
Data source: parameter	-					Parameter group	Parameter number	
Data source: data array	-					Data array number		
Data source: monitoring variable	-						Monitoring variable number	

7.1.3.6 Rotary Axis Position (Index Position) command

The PR mode includes a Rotary Axis Position command, which creates a rotary axis position system and sets the motor within the position system, unlike the position feedback in a global coordinate system. The Rotary Axis Position command is able to divide the rotary axis position scale into the number of paths required by the application (see Figure 7.1.3.6.1). When the Rotary Axis Position command is used for motor operation in single direction (or mostly in the same direction), if the motor position exceeds the range, absolute position or position counter overflow occurs. Refer to the setting in Chapter 10.

You can click **Rotary Axis Position Setting Wizard** in the **PR Mode Setting** screen of ASDA-Soft (see Figure 7.1.3.6.2) to set the rotary axis position. As shown in the example, the starting PR path is set to 1, the number of paths (path size) is set to 8, and the total moving distance (P2.052) is 80000 PUU. When you click **OK**, the software automatically writes the position command of 0 PUU to PR#01, 10000 PUU to PR#02, 20000 PUU to PR#03, and so on up to PR#08. When the rotary axis position reaches 80000 PUU, it automatically returns to 0 PUU. In addition, you can modify the Rotary Axis Position command in the setting screen of each PR path as needed, as shown in Figure 7.1.3.6.3.

- INS is the interrupt function that allows the next PR path to interrupt the previous PR path. Refer to Section 7.1.6 for more details.
- OVLP is the function that allows the next PR path to overlap the PR path currently being executed during deceleration. If you use this function, setting the delay time to 0 is suggested. Refer to Section 7.1.6 for more details.
- DIR sets the rotation direction with options of forward rotation (always move forward), reverse rotation (always move in reverse direction), and the shortest distance. The movement is illustrated in Figure 7.1.3.6.4.
- S_LOW is the speed unit with options of 0.1 rpm or 0.01 rpm.
- AUTO is the function that automatically loads and executes the next PR path when the current PR path completes.
- ACC / DEC is the acceleration / deceleration time determined by the shared parameters.
- SPD is the target speed determined by the shared parameters.
- DLY is the delay time determined by the shared parameters. It is defined by the command from the controller; in other words, once the target position is reached, the servo drive starts counting the delay time.
- Rotary Axis Position command (Written Data) is the target position of each rotary axis traveling segment. Note that the setting range must be smaller than P2.052 (Rotary axis position scale).

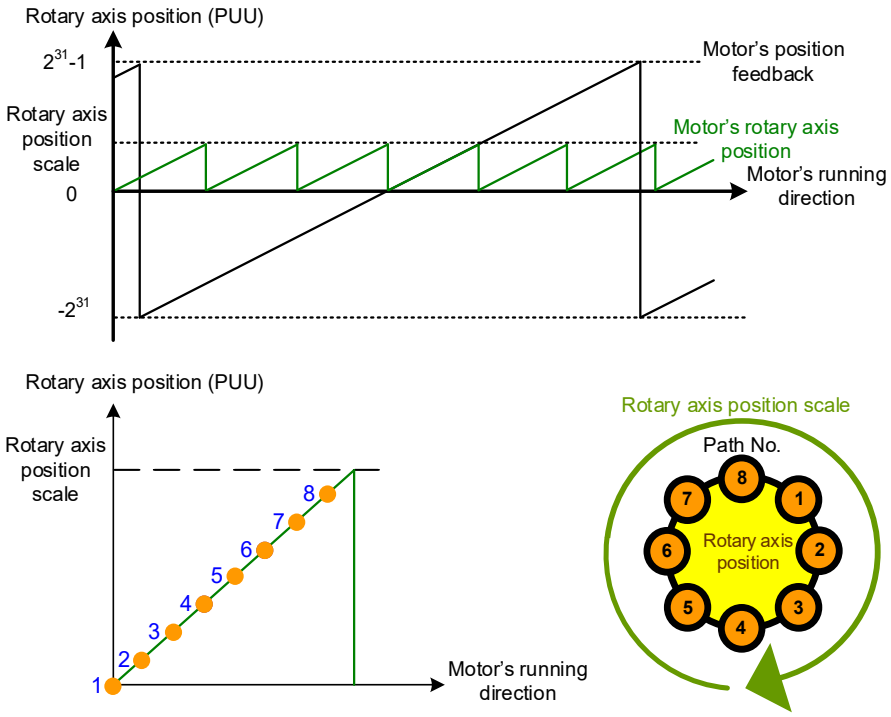

Figure 7.1.3.6.1 Rotary axis position in PR mode

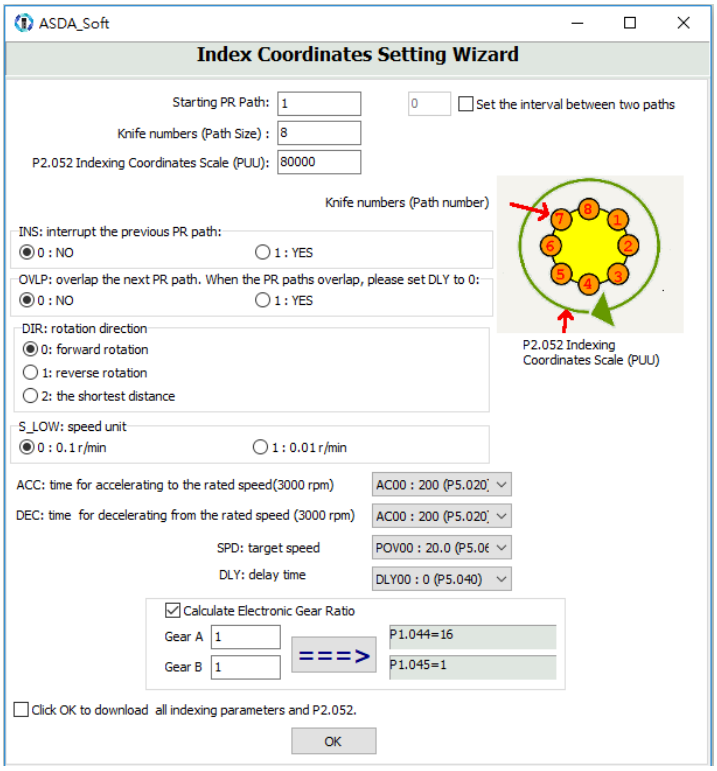

Figure 7.1.3.6.2 Rotary Axis Position Setting Wizard in PR mode

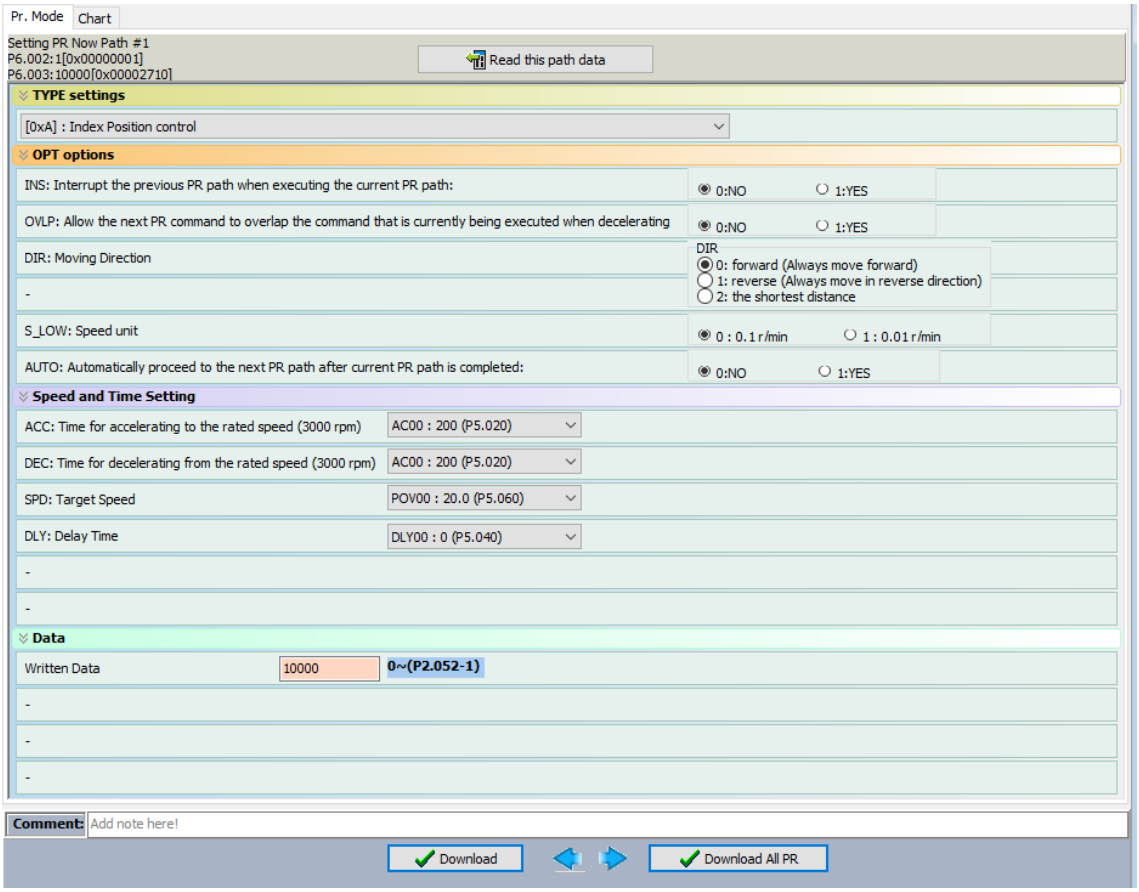

Figure 7.1.3.6.3 PR mode Rotary Axis Position control (Index Position control) screen in ASDA-Soft

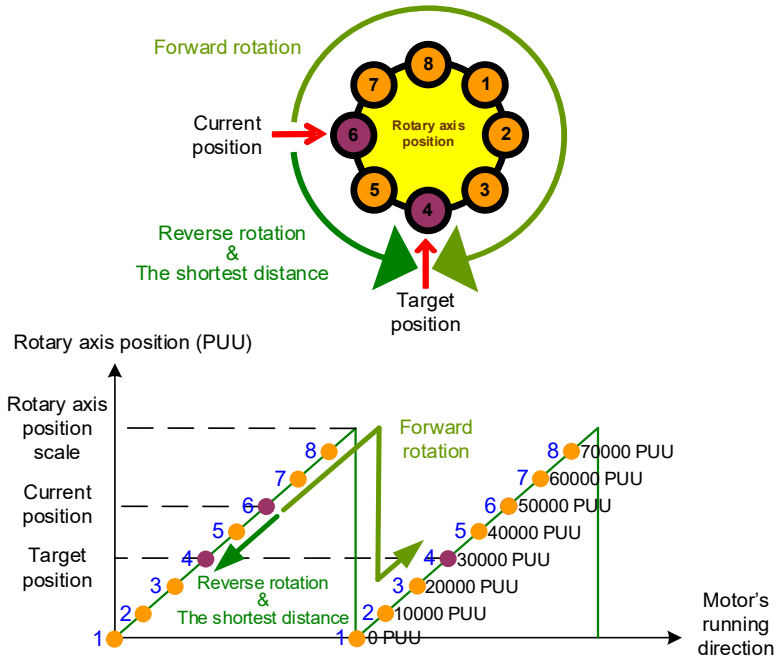

Figure 7.1.3.6.4 Motor's operation direction within rotary axis position system in PR mode

Table 7.1.3.6.1 shows the bit functions when a Rotary Axis Position command is in operation. When you use the rotary axis position function, execute homing first to create a position system so that the origin of the motor's position feedback and that of the motor's rotary axis position can be identical. If you use the rotary axis position function without executing homing, AL237 occurs.

7

Table 7.1.3.6.1 Bit functions of the PR Rotary Axis Position command

Bit / PR parameters	D	C	B	A	U	Z	Y	X
Property	-	OPT2	DLY	SPD	DEC	ACC	OPT	A
Data content	Rotary Axis Position command [PUU] (0 to P2.052 minus 1)							

Note:

1. X: A: INDEX, rotary axis position control (index position control)
2. Y: OPT, option

Bit	7	6	5	4	Description
Property	DIR		OVLP	INS	-
Data content	0	0	-	-	Forward rotation (always move forward)
	0	1			Reverse rotation (always move in reverse direction)
	1	0			The shortest distance
	1	1			-

INS: interrupts the previous path when the current path is executed.
OVLP: allow overlapping of the next command.
DIR: rotation direction.

3. C: OPT2, option 2

Bit	27	26	25	24
Property	-	AUTO	-	S_LOW

S_LOW: speed unit options, 0 = 0.1 rpm and 1 = 0.01 rpm.
AUTO: once current PR path is finished, automatically loads the next path.

4. Z, U: ACC / DEC, acceleration / deceleration time, set by P5.020 - P5.035.
5. A: SPD, target speed, set by P5.060 - P5.075.
6. B: DLY, delay time, set by P5.040 - P5.055.

7.1.4 Overview of the PR path

To make the PR paths easier to understand, ASDA-Soft presents the execution order and calling sequence of all PR paths. The symbols and contents in the PR path diagram are shown as follows, including five parts: number, command execution type (property), command type, next PR path, and command information. See Figure 7.1.4.1.

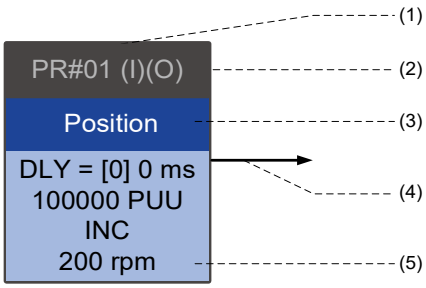

Figure 7.1.4.1 Overview of the PR path

(1) Number: the PR path number, ranging from PR#00 to PR#63 (64 sets of PR paths).

(2) Command execution type (property): (B) execute homing when power is on; (O) command overlap; (R) write data to EEPROM; and (I) command interrupt.

(3) Command type: there are six types of PR paths: Homing, Speed, Position, Jump, Write, and Rotary Axis Position (Index Position). The color displayed in this section depends on the command type.

(4) Next PR path: if the current path is followed by a PR path, there would be an arrow pointing to the specified PR path.

(5) Command information: displays the details of this PR path. The displayed contents and color depend on the command type.

The following illustrates each command type and its display.

Homing methods

In the display of homing methods, PR#00 always signifies the homing procedure, which is marked as “Homing”. See Figure 7.1.4.2.

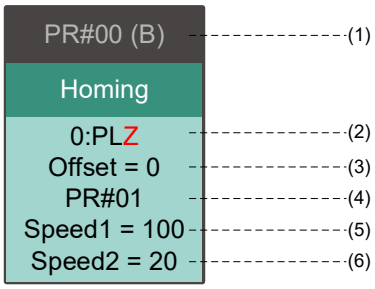

Figure 7.1.4.2 Homing methods display

(1) Activation mode (Boot): if the drive is set to execute homing when switched to On for the first time after being powered on, (B) is displayed; if homing is not required, no information is displayed.

(2) Method selection: including the homing methods and Z pulse setting shown as follows. PL signifies positive limit; NL signifies negative limit. When the method name ends with a “Z”, it means the servo looks for the Z pulse in the forward or reverse direction; when the method name ends with a non-Z character, it means the servo does not look for the Z pulse. F signifies running forward; R signifies running in reverse; ORG signifies the home sensor signal; CUR signifies the current position; and BUMP signifies the hard stop.

Homing method	Y = 0: reverse to Z pulse Y = 1: go forward to Z pulse	Y = 2: do not look for Z pulse
X = 0: homing in forward direction and define the positive limit as the homing origin	0: PLZ	0: PL
X = 1: homing in reverse direction and define the negative limit as the homing origin	1: NLZ	1: NL
X = 2: homing in forward direction, ORG: OFF→ON as the homing origin	2: F_ORGZ	2: F_ORG
X = 3: homing in reverse direction, ORG: OFF→ON as the homing origin	3: R_ORGZ	3: R_ORG
X = 4: look for Z pulse in forward direction and define it as the homing origin	4: F_Z	
X = 5: look for Z pulse in reverse direction and define it as the homing origin	5: R_Z	
X = 6: homing in forward direction, ORG: ON→OFF as the homing origin	6: F_ORGZ	6: F_ORG
X = 7: homing in reverse direction, ORG: ON→OFF as the homing origin	7: R_ORGZ	7: R_ORG
X = 8: define current position as the origin	8: CUR	
X = 9: torque homing in forward direction	9: F_BUMPZ	9: F_BUMP
X = A: torque homing in reverse direction	A: R_BUMPZ	A: R_BUMP

(3) Offset: origin offset (P6.001).

(4) Path: the next PR path to be executed after homing.

(5) Homing at high speed (Speed1): first homing speed (P5.005).

(6) Homing at low speed (Speed2): second homing speed (P5.006).

Speed command

You can use the Speed command in any PR paths from PR#01 to PR#63, which is marked as “Speed”. See Figure 7.1.4.3.

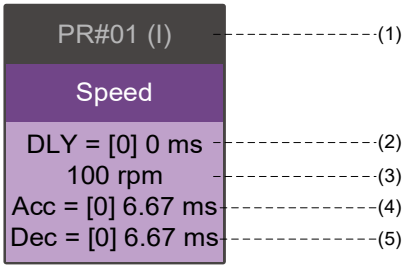

Figure 7.1.4.3 Speed command display

(1) Command execution type (property): a Speed command can interrupt (INS) the previous PR path. If the Interrupt function is enabled, (I) is displayed; if not, no information is displayed.

(2) Delay time (DLY): determined by the shared parameters. It is defined by the command from the controller; in other words, once the target speed is reached, the servo drive starts counting the delay time.

(3) Target speed: the set target speed.

(4) Acceleration time (Acc): determined by the shared parameters. The software calculates and displays the required duration for the motor to accelerate from 0 to the target speed.

(5) Deceleration time (Dec): determined by the shared parameters. The software calculates and displays the required duration for the motor to decelerate from the target speed to 0.

7

Position command

You can use the Position command in any PR paths from PR#01 to PR#63, which is marked as “Position” with the options of “stop once the positioning is complete” and “automatically loads the next PR path once the positioning is complete”. The only difference is that the latter shows an arrow pointing to the next PR path. See Figure 7.1.4.4.

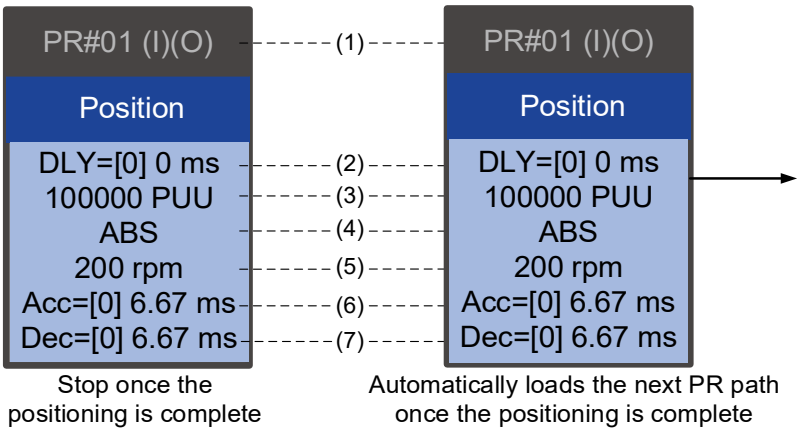

Figure 7.1.4.4 Position command display

(1) Command execution type (property): a Position command can interrupt (INS) the previous PR path. If the Interrupt function is enabled, (I) is displayed; if not, no information is displayed. You can also set an Overlap (OVLP) function in the Position command and set the delay time (DLY) to 0, so that the next PR path can overlap the current one. If the Overlap function is enabled, (O) is displayed; if not, no information is displayed.

(2) Delay time (DLY): determined by the shared parameters. It is defined by the command from the controller; in other words, once the target position is reached, the servo drive starts counting the delay time.

(3) Target position: the set target position.

(4) Position command type: “ABS” means absolute positioning; “REL” means relative positioning; and “INC” means incremental positioning.

(5) Target speed: determined by the shared parameters.

(6) Acceleration time (Acc): determined by the shared parameters. The software calculates and displays the required duration for the motor to accelerate from 0 to the target speed.

(7) Deceleration time (Dec): determined by the shared parameters. The software calculates and displays the required duration for the motor to decelerate from the target speed to 0.

Jump command

You can use the Jump command in any PR paths from PR#01 to PR#63, which is marked as "Jump" and followed by an arrow pointing to the next PR path. See Figure 7.1.4.5.

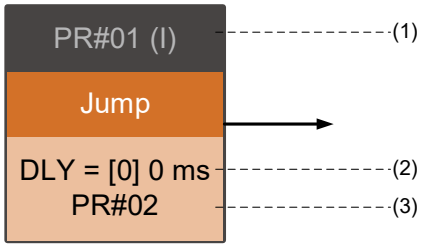

Figure 7.1.4.5 Jump command display

(1) Command execution type (property): a Jump command can interrupt (INS) the previous PR path. If the Interrupt function is enabled, (I) is displayed; if not, no information is displayed.

(2) Delay time (DLY): determined by the shared parameters.

(3) Target PR number: the set target PR number.

Write command

You can use the Write command in any PR paths from PR#01 to PR#63, which is marked as "Write". See Figure 7.1.4.6.

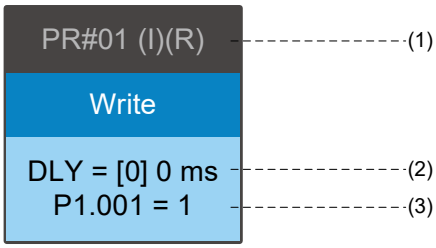

Figure 7.1.4.6 Write command display

(1) Command execution type (property): a Write command can interrupt (INS) the previous PR path. If the Interrupt function is enabled, (I) is displayed; if not, no information is displayed. You can determine whether to write the data to EEPROM. If writing data to EEPROM is required, (R) is displayed; if not, no information is displayed.

(2) Delay time (DLY): determined by the shared parameters.

(3) Writing target and data source: the representations are shown in the following table. Note that constants can be written in DEC or HEX format.

Writing target	Data source
Parameter (PX.XXX)	Constant
Data array (Arr[#])	Parameter (PX.XXX)
-	Data array (Arr[#])
-	Monitoring variable (Mon[#])

7

Rotary Axis Position (Index Position) command

You can use the Rotary Axis Position command in any PR paths from PR#01 to PR#63. The setting of the number of PR paths for the Rotary Axis Position command determines the number of path segments. The path is marked as “Index Position”. See Figure 7.1.4.7.

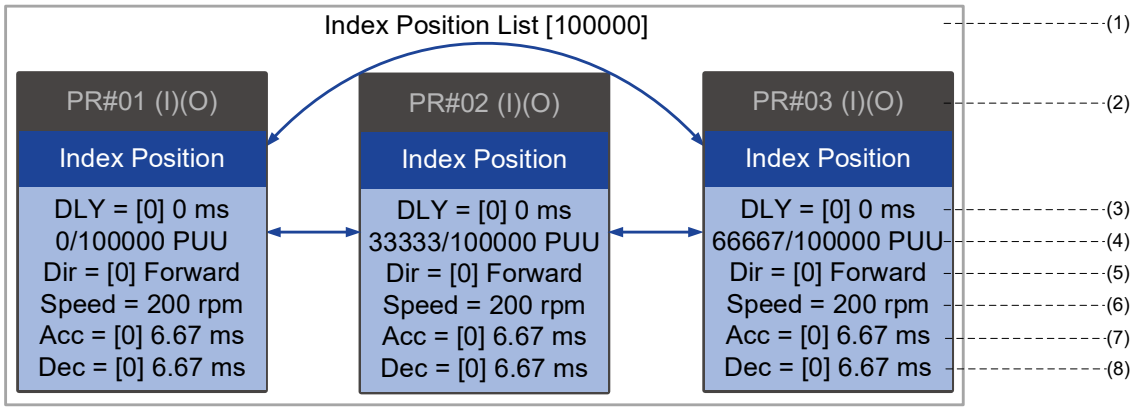

Figure 7.1.4.7 Rotary Axis Position (Index Position) command display

(1) Rotary Axis Position command section: indicates a set of Rotary Axis Position commands. It shows the total moving distance at the top, and uses double arrows to show that the motor can run reciprocally between each target position in each PR path.

(2) Command execution type (property): a Rotary Axis Position command can interrupt (INS) the previous PR path. If the Interrupt function is enabled, (I) is displayed; if not, no information is displayed. You can also set an Overlap (OVLP) function in the Rotary Axis Position command and set the delay time (DLY) to 0, so that the next PR path can overlap the current one. If the Overlap function is enabled, (O) is displayed; if not, no information is displayed.

(3) Delay time (DLY): determined by the shared parameters. It is defined by the command from the controller; in other words, once the target position is reached, the servo starts counting the delay time.

(4) Position command: the numerator is the Rotary Axis Position command, which is the target position of each PR path; the denominator is the total moving distance of this set of Rotary Axis Position commands, which is set by P2.052.

(5) Rotation direction (Dir): available options are Forward (always move forward), Reverse (always move in reverse direction), and Shortest (the shortest distance).

(6) Target speed: determined by the shared parameters.

(7) Acceleration time (Acc): determined by the shared parameters. The software calculates and displays the required duration for the motor to accelerate from 0 to the target speed.

(8) Deceleration time (Dec): determined by the shared parameters. The software calculates and displays the required duration for the motor to decelerate from the target speed to 0.

7.1.5 Trigger methods for the PR path

There are multiple methods for triggering the PR path: Digital input (DI) triggering, Event triggering, and PR path trigger register (P5.007). Choose the most suitable trigger method based on the applications and requirements.

Digital input (DI) triggering

You can choose the PR path to execute by using the internal command registers (POS0 - POS5) and use DI.CTRG to trigger the selected PR path. Before triggering the PR path with the digital input (DI), you must define the functions of several sets of DIs, which are DI.POS0 (0x11), DI.POS1 (0x12), DI.POS2 (0x13), DI.POS3 (0x1A), DI.POS4 (0x1B), DI.POS5 (0x1C), and DI.CTRG (0x08) (see Table 8.1 in Chapter 8). You can set these DIs in the Digital IO setting screen in ASDA-Soft.

Select the PR path to execute based on the On / Off status of DI.POS0 - POS5 and use DI.CTRG to trigger the specified PR path. See the following table as an example.

Position command	POS5	POS4	POS3	POS2	POS1	POS0	CTRG	Corresponding parameter
Homing	0	0	0	0	0	0	↑	P6.000
								P6.001
PR#01	0	0	0	0	0	1	↑	P6.002
								P6.003
…								…
PR#50	1	1	0	0	1	0	↑	P6.098
								P6.099
PR#51	1	1	0	0	1	1	↑	P7.000
								P7.001
…								…
PR#63	1	1	1	1	1	1	↑	P7.026
								P7.027

In addition, there are two sets of DIs for special functions: DI.SHOM (0x27) and DI.STP (0x46). If the former is triggered, the servo drive executes homing according to the homing setting. If the latter is triggered, the servo drive stops the motor. You can use the Digital IO setting screen in ASDA-Soft to set these functions, as shown in Figure 7.1.5.1.

7

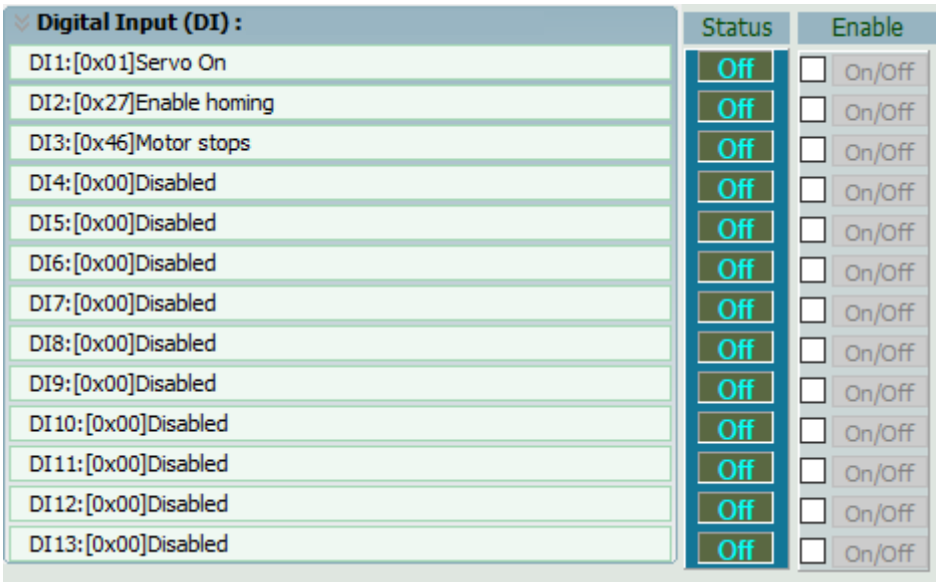

Figure 7.1.5.1 Digital IO setting screen in ASDA-Soft

Event triggering

You can use Event trigger commands 1 - 4 to execute the specified PR path. There are two types of Event triggering: rising-edge trigger and falling-edge trigger. The PR paths that you can specify are PR#51 - 63 (see the example in Figure 7.1.5.2). Before using the event triggering for PR paths, you must define the functions of these DIs, which are DI.EV1 (0x39), DI.EV2 (0x3A), DI.EV3 (0x3B), and DI.EV4 (0x3C) (see Table 8.1 in Chapter 8). You can use the Digital IO setting screen in ASDA-Soft to set these functions, as shown in Figure 7.1.5.3.

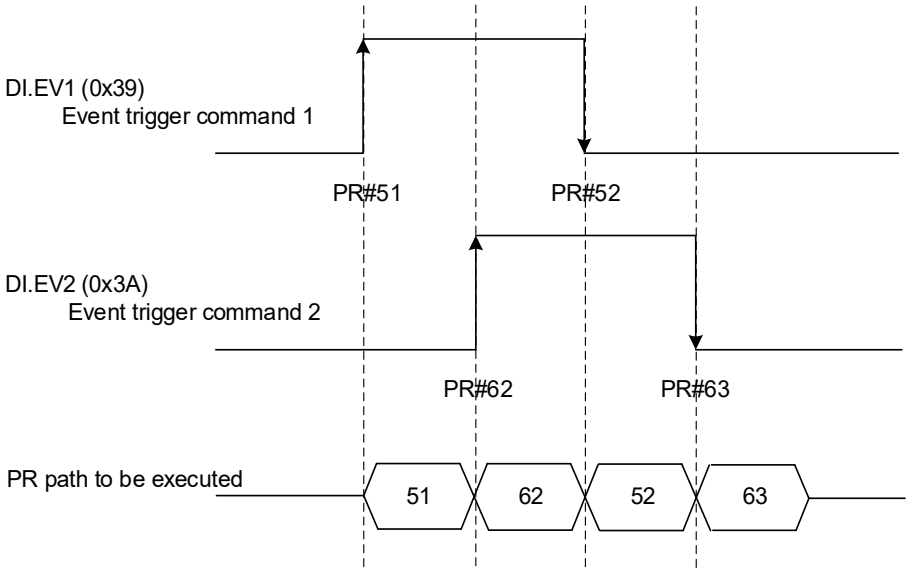

Figure 7.1.5.2 Example of event triggering timing diagram

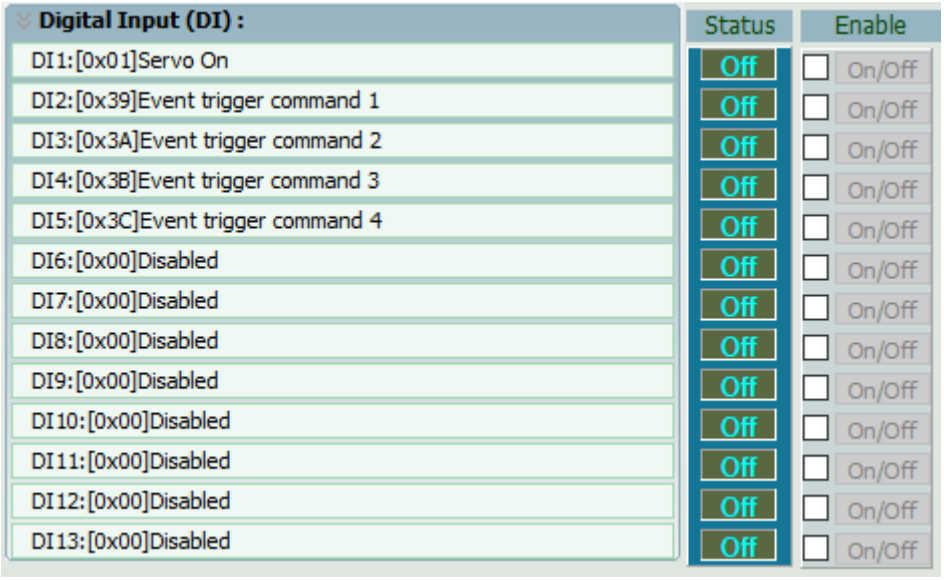

Figure 7.1.5.3 Digital IO setting screen in ASDA-Soft

You can set the rising-edge trigger of the PR path with P5.098 and set the falling-edge trigger with P5.099. Refer to Chapter 8 for more details. You can also use ASDA-Soft to set the event triggering of PR paths. See Figure 7.1.5.4.

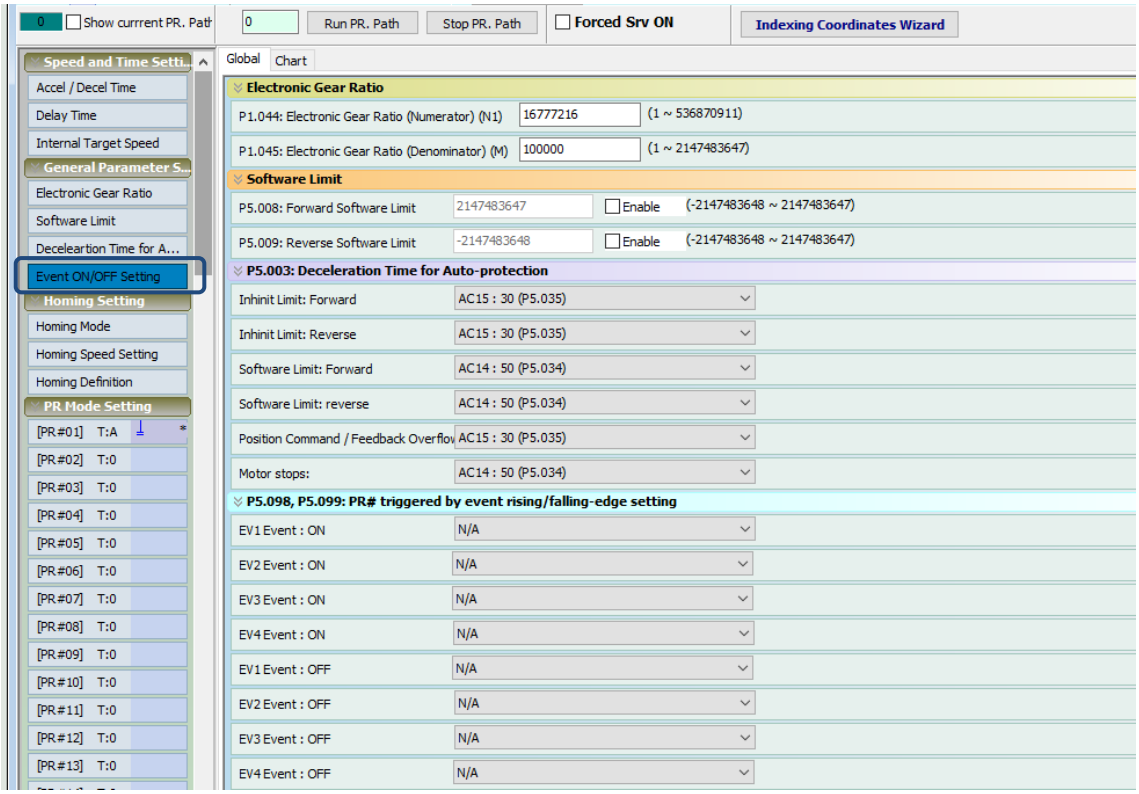

Figure 7.1.5.4 Event ON / OFF Setting screen in ASDA-Soft

PR path trigger register (P5.007)

You can write the PR path to be executed in P5.007 to have the servo drive execute the specified PR path.

If you set P5.007 to 0, the servo drive executes homing. If you set P5.007 to 1 - 63, the servo drive executes the specified PR path. If you set P5.007 to 1000, the servo drive stops executing PR paths. Refer to the setting descriptions of P5.007 in Chapter 8.

7.1.6 PR path execution flow

The servo drive updates the command status every millisecond. Figure 7.1.6.1 illustrates how the servo drive deals with the PR paths. Once a PR path is triggered, it goes through three processing units, which are PR queue, PR executor, and motion command generator.

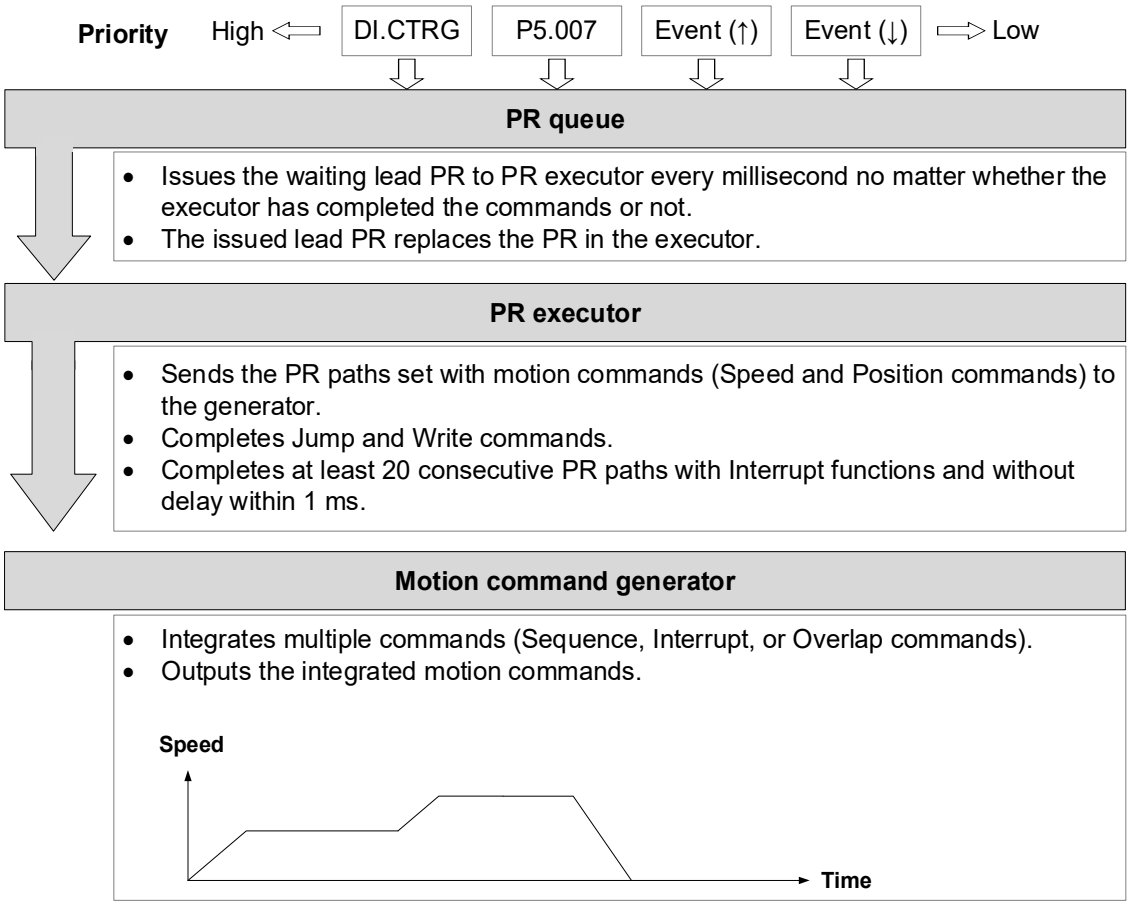

Figure 7.1.6.1 PR execution flow in the servo drive

■ Trigger process

As mentioned in Section 7.1.5, the servo drive provides multiple trigger methods. A PR path is executed as long as a trigger signal is output. When two different triggers are generated within the same millisecond, the priority is: DI triggering (DI.CTRG) > PR path trigger register (P5.007) > Rising-edge event triggering (Event ↑) > Falling-edge event triggering (Event ↓). Within this millisecond, the path with higher priority is executed first and then the path with lower priority is sent in the next millisecond. If three PR paths are triggered in the same millisecond, the third one is not added to the PR queue.

■ PR queue

The triggered PR path is the lead PR. The waiting lead PR goes into the PR queue with its PR group. In each millisecond, the servo drive sends the lead PR and its PR group to the PR executor on a first-in first-out basis no matter whether a PR path is being executed in the PR executor. Therefore, as long as a PR path is triggered, the PR queue collects it and sends it to the PR executor.

■ PR executor

Once the PR executor receives the lead PR and its PR group, the PR group in execution is replaced immediately. If the received PR group includes motion commands (Speed and Position commands), then the PR executor sends them to the motion command generator. PR paths with Write or Jump commands are executed at the moment when the PR executor reads the command, and thus they do not enter the generator. The PR executor can consecutively complete at least 20 PR paths with the Interrupt function (INS) without delay (DLY) within 1 millisecond. If there are PR paths that have not been completed within 1 millisecond, and the PR queue has already sent a new PR group to the PR executor, then the new PR group replaces the previous one. In other words, instead of executing the PR group that has not been completed, the PR executor starts executing the new PR group. If there are PR paths that have not been completed within 1 millisecond but no new PR group is sent to the PR executor, the PR executor continues to execute the unfinished PR paths.

■ Motion command generator

The PR executor sends the motion commands (Speed and Position commands) to the motion command generator. This generator has a buffer for temporarily storing the next motion command, and all motion commands are integrated here. Motion commands can be executed as long as they enter the generator. If another motion command set with the Interrupt function also enters the generator, it is integrated with the current command in the generator. The settings of the integrated command, including whether multiple motion commands are Sequence commands and whether they are set with the Interrupt (INS) or Overlap (OVLP) function, are determined by the setting of each PR path.

Sequence command

The configurable motion commands for PR paths are the Position and Speed commands. Sequence command refers to a series of motion commands without the Overlap (OVLP) or Interrupt (INS) function, and the next command is executed only after the delay time (DLY) set in the previous command is over. For Position commands, the delay time starts to count after the target position is reached. For Speed commands, the delay time starts to count after the target speed is reached.

■ Position command ▶ Position command

When the PR executor receives two consecutive Position commands without the Interrupt or Overlap function, the PR executor sends the first Position command to the motion command generator, and the generator starts the first part of position control. After the first Position command completes, if no delay time is set, the PR executor sends the second Position command for the generator to start the second part of position control, as shown in Figure 7.1.6.2 (a).

If the first Position command includes a delay, the PR executor starts counting the delay time right after the motor reaches the target position, and then sends the second Position command for the generator to start the second part of position control, as shown in Figure 7.1.6.2 (b).

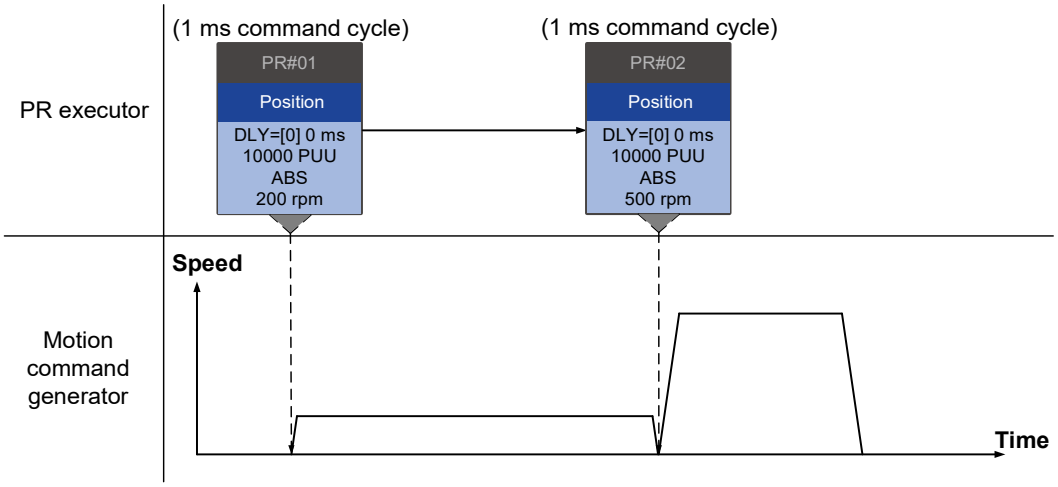

(a) Position command without delay

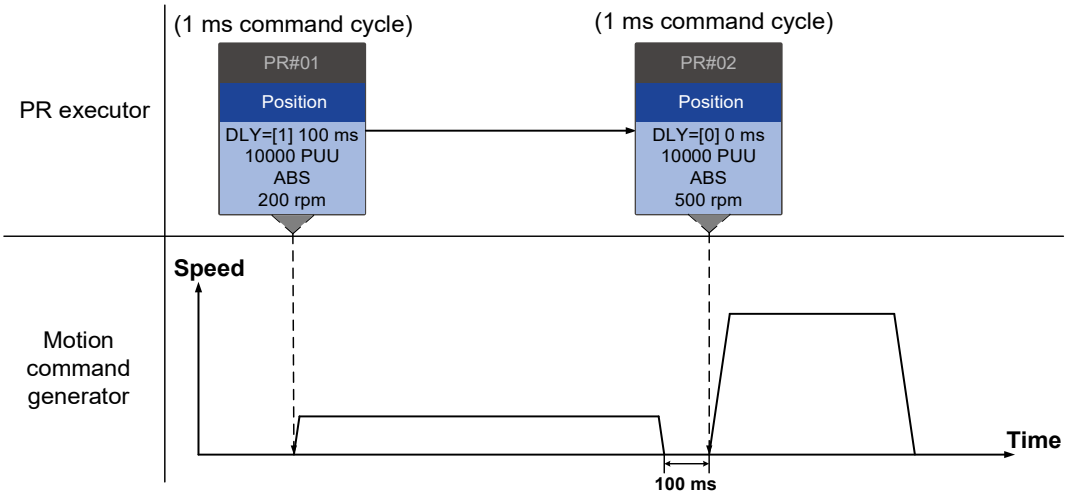

(b) Position command with delay

Figure 7.1.6.2 Position Sequence commands

■ Speed command ▶ Speed command

When the PR executor receives two consecutive Speed commands without the Interrupt or Overlap function, the PR executor sends the first Speed command to the motion command generator, and the generator starts the first part of speed control. After the first Speed command completes, if no delay time is set, the PR executor sends the second Speed command for the generator to start the second part of speed control, as shown in Figure 7.1.6.3 (a).

If the first Speed command includes a delay, the PR executor starts counting the delay time right after the motor reaches the target speed, and then sends the second Speed command for the generator to start the second part of speed control, as shown in Figure 7.1.6.3 (b).

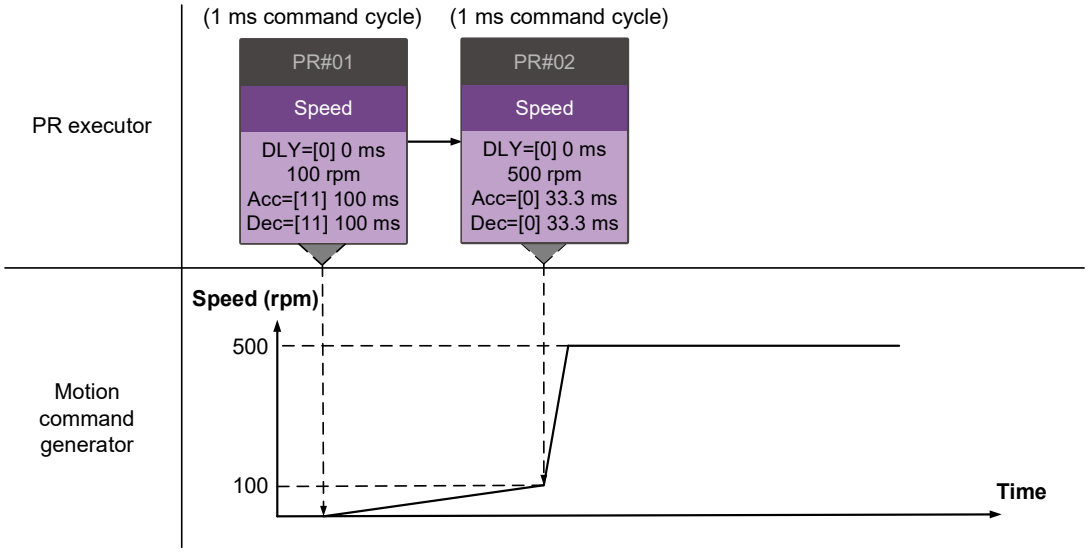

(a) Speed command without delay

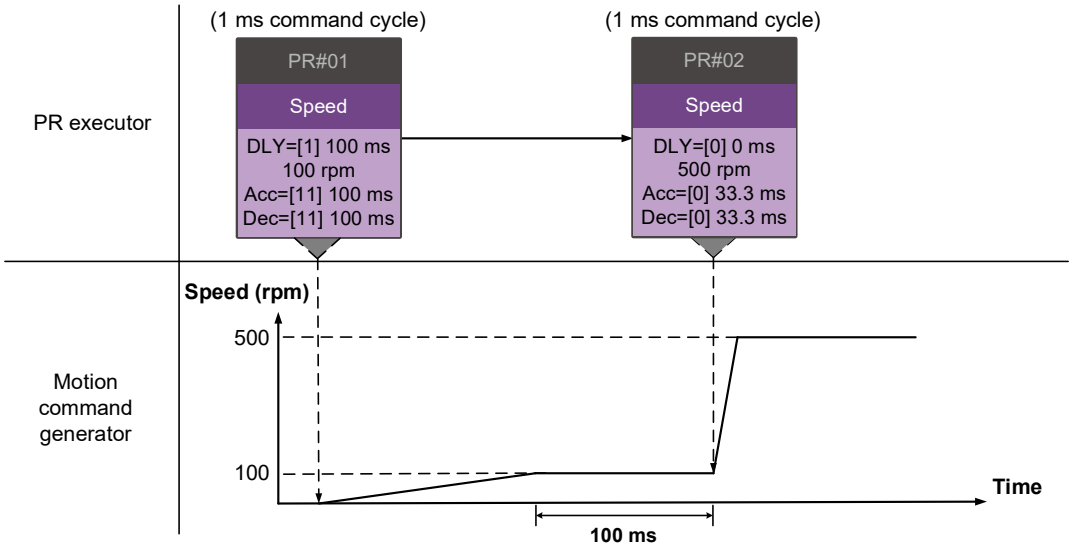

(b) Speed command with delay

Figure 7.1.6.3 Speed Sequence commands

■ Multiple commands

The PR queue updates the commands every millisecond. For a motion command, the PR queue sends the next command to the motion command generator only after the previous command is complete. Jump or Write commands are executed by the PR executor immediately. As shown in Figure 7.1.6.4, in the first millisecond, the PR queue receives a Position command and the PR executor sends this command to the motion command generator for execution. In the second millisecond when the Position command is complete, the PR queue receives a Write command and the PR executor executes it immediately. In the next millisecond, the PR queue receives a Jump command and the PR executor executes it immediately as well. The Write and Jump commands are not sent to the motion command generator since the PR executor and the generator execute commands independently. In the next millisecond, the PR queue receives a Position command and the PR executor sends this command to the motion command generator for execution.

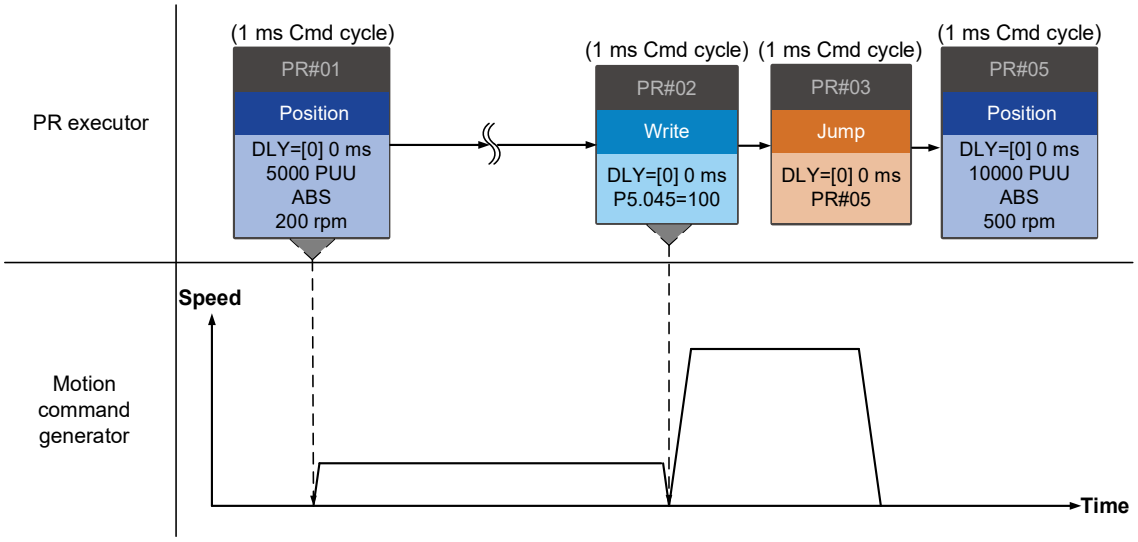

Figure 7.1.6.4 Multiple Sequence commands

7

Command interruption

The Interrupt function (INS) causes a command in execution to be replaced or integrated by the next command. The results of interruption differ based on the command types. There are two types of interruption: internal and external, as shown in Figure 7.1.6.5.

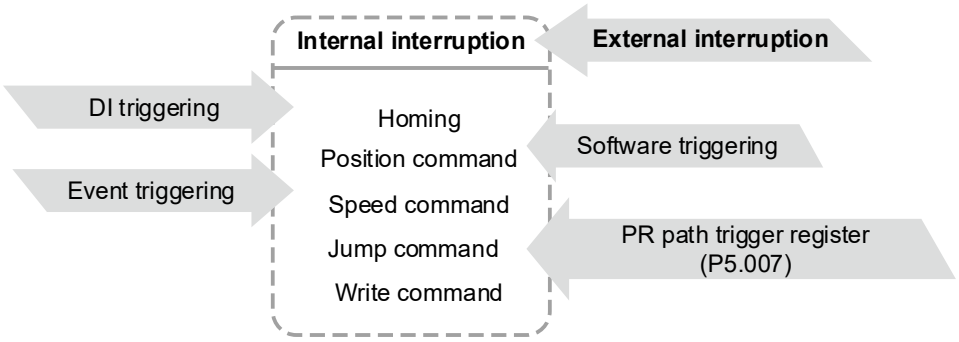

Figure 7.1.6.5 Internal and external interruption

1. Internal interruption

For a series of PR paths, if one PR path includes the AUTO function (auto-execute the next path), the system continues to read the next path right after reading the current path instead of reading the next path after the current path is complete. If the current path includes a delay, the next path is read after the delay time is over. Meanwhile, if the next path includes the Interrupt function (which has a higher execution priority), the servo drive immediately executes the path set with the Interrupt function by replacing the un-executed commands in the previous path with the next path or integrating the commands of the previous path which are in execution with the next path.

■ Position command ▶ Position command (I) ▶ Position command

When the PR executor receives three consecutive Position commands and the second one is set with the Interrupt function, it treats the first and second Position commands as one PR group. Since the first Position command is not yet executed by the PR executor, the PR executor replaces the first command with the second one and only sends the second one to the motion command generator for execution. After the second command is complete, the PR executor sends the third command to the generator, as shown in Figure 7.1.6.6 (a).

If the first command includes a delay, the PR executor sends the first command to the generator and then starts counting the delay time. After the delay time is over, the PR executor then sends the second command and the generator starts the second part of position control. While the first command is still being executed, it is integrated with the second command. Since this integration differs from that described in Section 7.1.3.3, refer to the following note for descriptions. Once the integrated command is complete, the PR executor sends the third command to the generator for execution, as shown in Figure 7.1.6.6 (b).

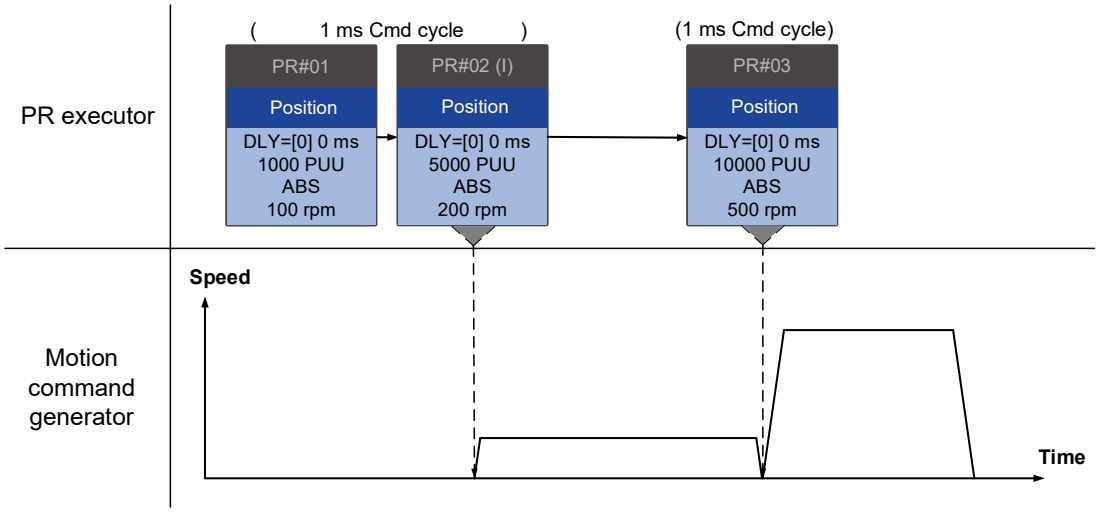

(a) Position command without delay

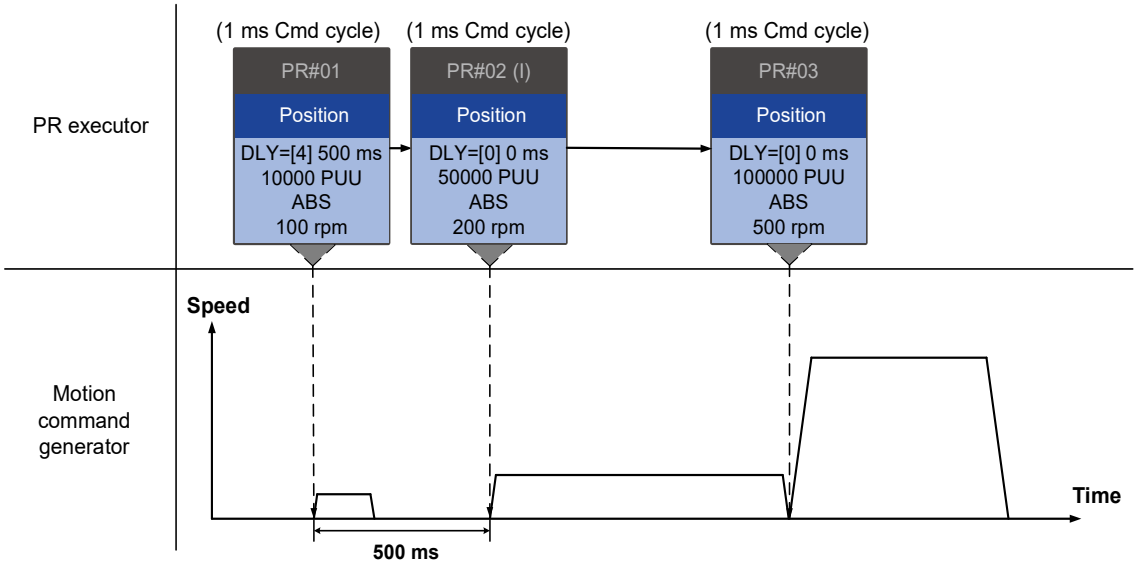

(b) Position command with delay

Figure 7.1.6.6 Internal interruption - Position commands

Note: the way to integrate the position commands of internal interruption is slightly different from what is described in Section 7.1.3.3. Generally, the relative position command (REL)'s target position = motor's current position + command value. However, for internal interruption, the relative position command (REL) works the same as the incremental position command (INC), with the target position = previous target position + command value. See the following example.
The rest of the integration method is the same as that mentioned in Section 7.1.3.3.

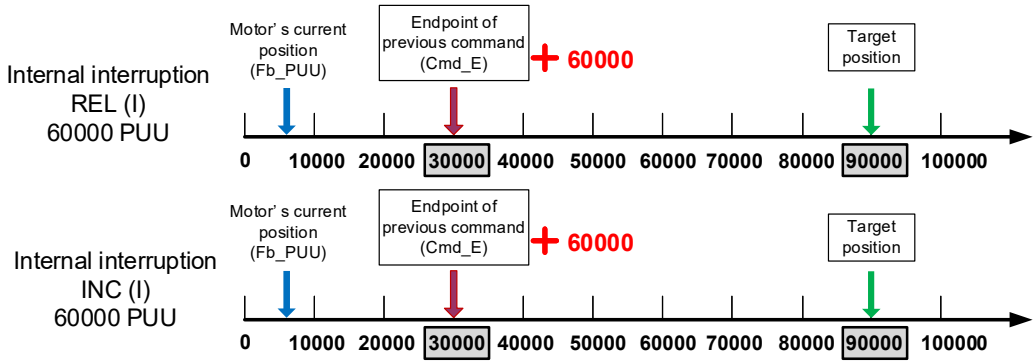

Figure 7.1.6.7 Example of relative and incremental position commands for internal interruption

■ Speed command ▶ Speed command (I) ▶ Speed command

When the PR executor receives three consecutive Speed commands and the second command is set with the Interrupt function, it treats the first and second Speed commands as one PR group. Since the first Speed command is not yet executed by the PR executor, the PR executor replaces the first command with the second one and only sends the second one to the motion command generator for execution. After the second command is complete, the PR executor sends the third command to the generator, as shown in Figure 7.1.6.8 (a).

If the first command includes a delay, the PR executor sends the first command to the generator and then starts counting the delay time. After the delay time is over, the PR executor then sends the second command and the generator starts the second part of speed control. While the first command is still being executed, it is integrated with the second command. Once the second command is complete, the PR executor sends the third command to the generator for execution, as shown in Figure 7.1.6.8 (b).

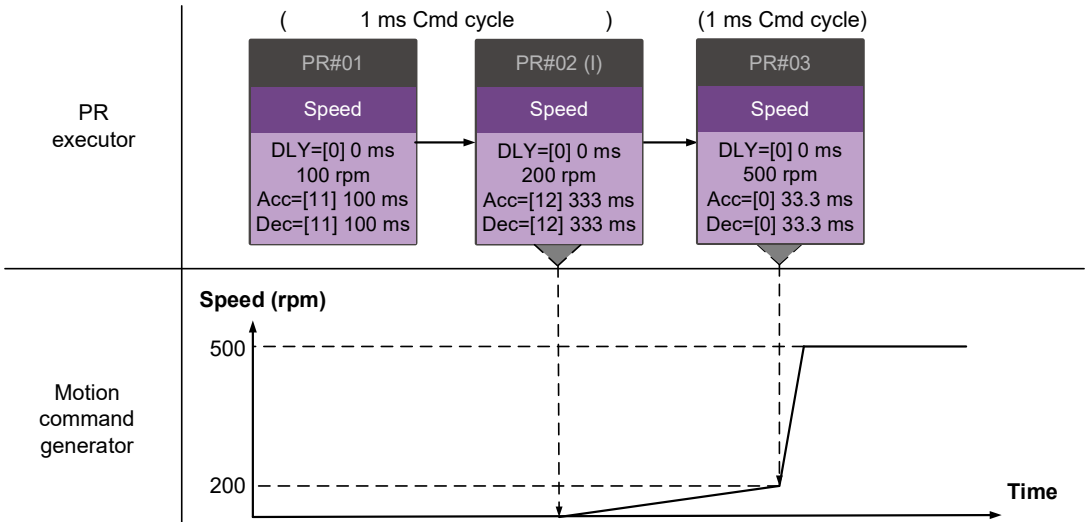

(a) Speed command without delay

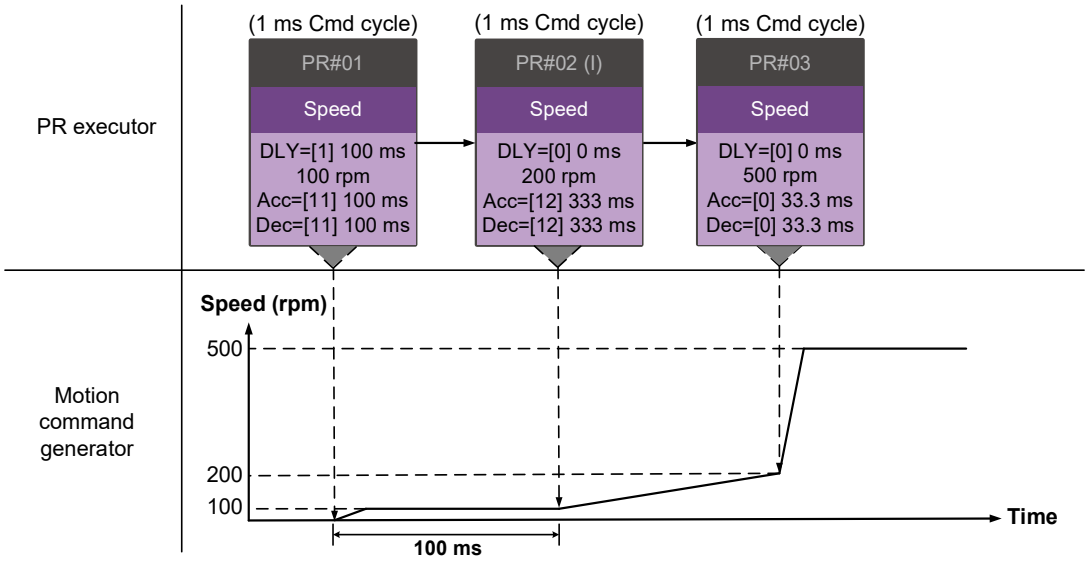

(b) Speed command with delay

Figure 7.1.6.8 Internal interruption - Speed commands

■ Multiple interruptions

The PR queue updates the commands every millisecond. If all PR paths are consecutive with the Interrupt functions and without delay, the PR queue can read at least 20 PR paths in 1 millisecond, and these paths are regarded as one PR group. If this PR group includes multiple motion commands, the PR queue only sends the last command it receives to the motion command generator for execution. That is, in a PR group, only one PR path with motion command is executed. The latter motion command directly replaces the former ones, whereas Jump and Write commands are executed by the PR executor as soon as they are received by the PR queue, as shown in Figure 7.1.6.9 (a).

If one of the PR paths includes a delay, the PR queue regards this PR path and the prior path(s) as the first PR group, and what follows is the second PR group. In this case, up to two PR paths with motion commands can be executed, as shown in Figure 7.1.6.9 (b).

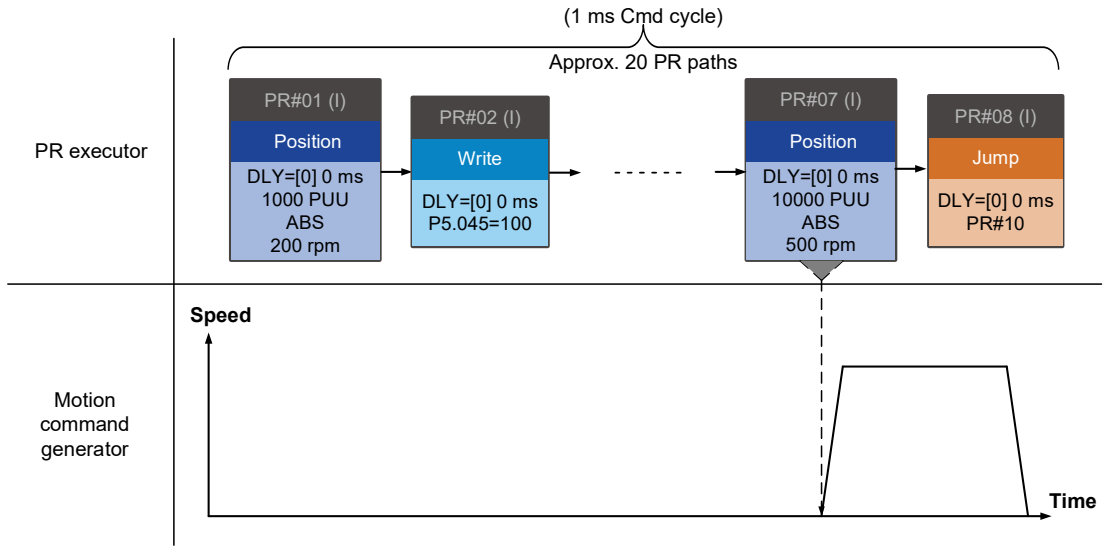

(a) Multiple commands without delay

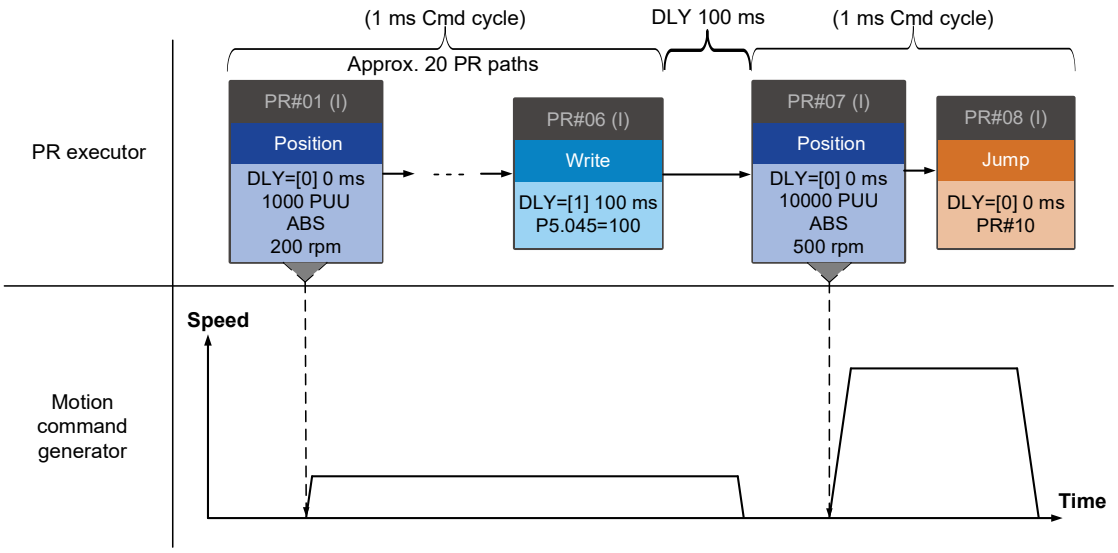

(b) Multiple commands with delay

Figure 7.1.6.9 Internal interruption - Multiple commands

2. External interruption

When a PR path is being executed, if another PR path is forced to execute with any of the trigger methods for the PR path (refer to Section 7.1.5 for PR trigger methods), the PR queue receives the PR path with the Interrupt function and sends this path to the motion command generator immediately to change the path in execution. Note that a delay does not change the result of an external interruption. That is, once the PR queue receives a command set with the Interrupt function through external interruption, the next motion command is executed by the generator and integrated with the previous command.

The external interruption of the Position command is as shown in Figure 7.1.6.10 (a). If a PR path with the Interrupt function enters the PR executor by external interruption, the executor sends this Position command immediately to the motion command generator for execution. The motor then runs with the settings integrated with the previous motion command. The methods of integration are described in Section 7.1.3.3. The external interruption of the Speed commands is the same as that of the Position commands, as shown in Figure 7.1.6.10 (b), and the same is true for multiple commands.

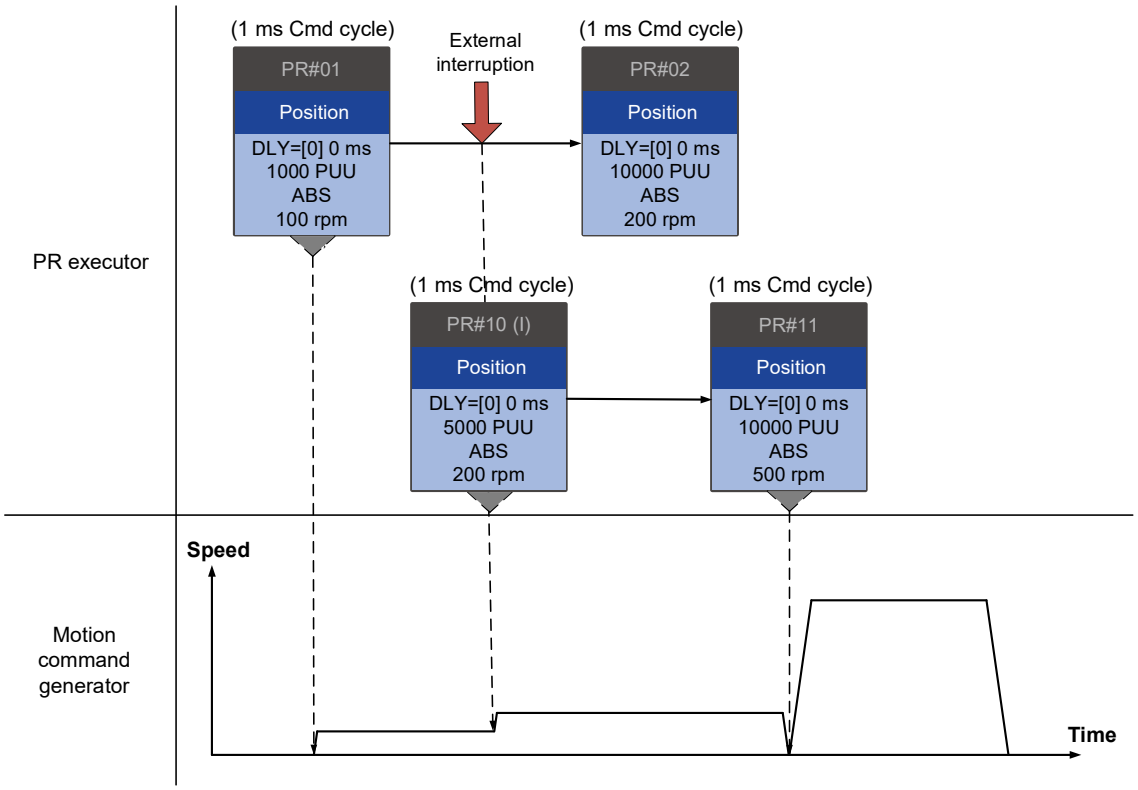

(a) External interruption - Position command

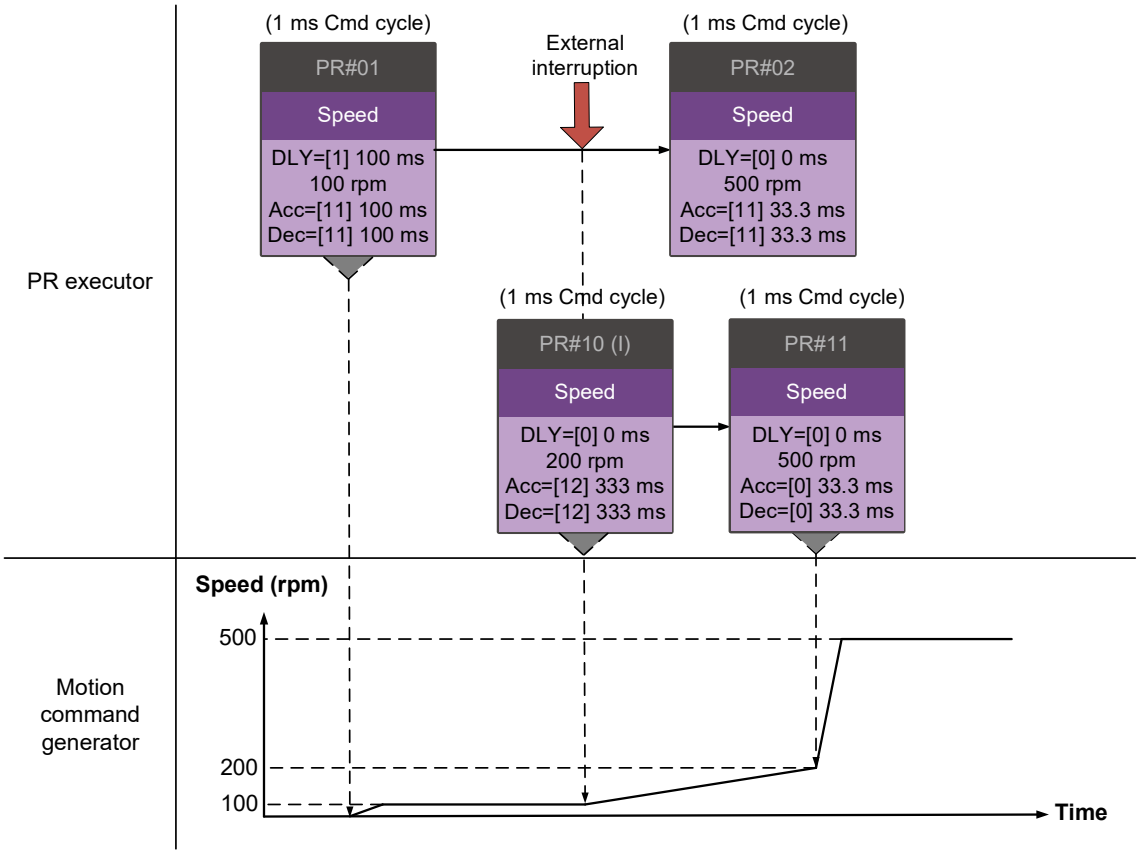

(b) External interruption - Speed command

Figure 7.1.6.10 External interruption

Command overlapping

If the previous position command includes the Overlap (OVLP) function, it allows the next command to be executed while the previous motion is decelerating, thus achieving a continuous motion. When you use the Overlap function, the delay time setting is still effective. The delay time starts to count from the start point of the command; however, in order to have a smooth command transition, setting the delay time to 0 is suggested. In addition, if the deceleration time of the previous command is identical to the acceleration time of the next command, the discontinuous speed during transition can be avoided, smoothing the transition between commands (see Figure 7.1.6.11).

The relationship between the 1st target speed and its deceleration time and the relationship between the 2nd target speed and its acceleration time are as follows.

$$\frac{\text{1st target speed (Spd1)}}{3000} \times \text{Dec. time (Dec)} = \frac{\text{2nd target speed (Spd2)}}{3000} \times \text{Acc. time (Acc)}$$

Command interruption has a higher priority than command overlapping. Thus, when you set the Overlap function in the current Position command, and the next motion command includes the Interrupt function, only the command with the Interrupt function is executed.

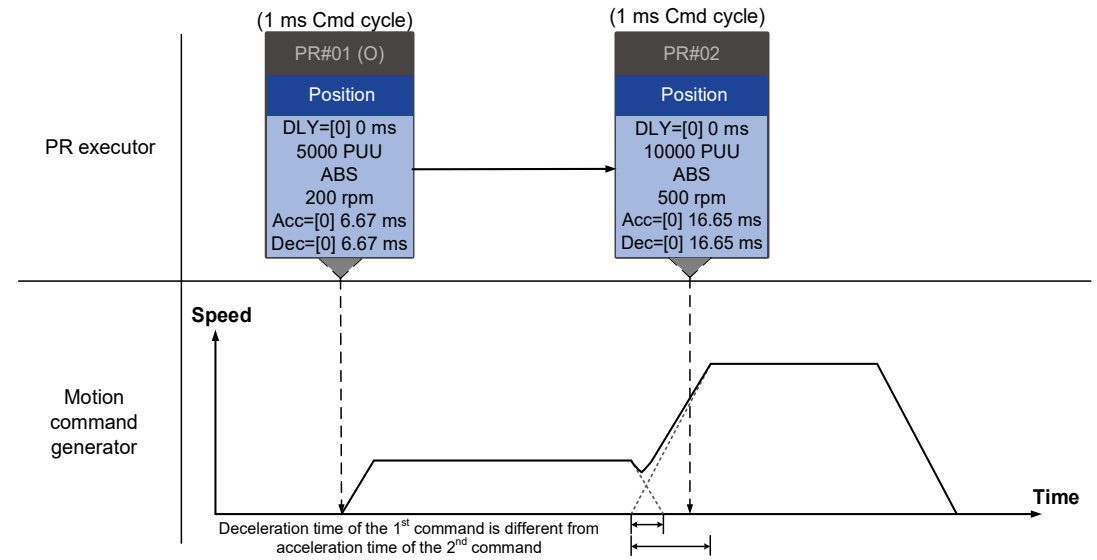

(a) Command overlapping - Acceleration and deceleration times are different

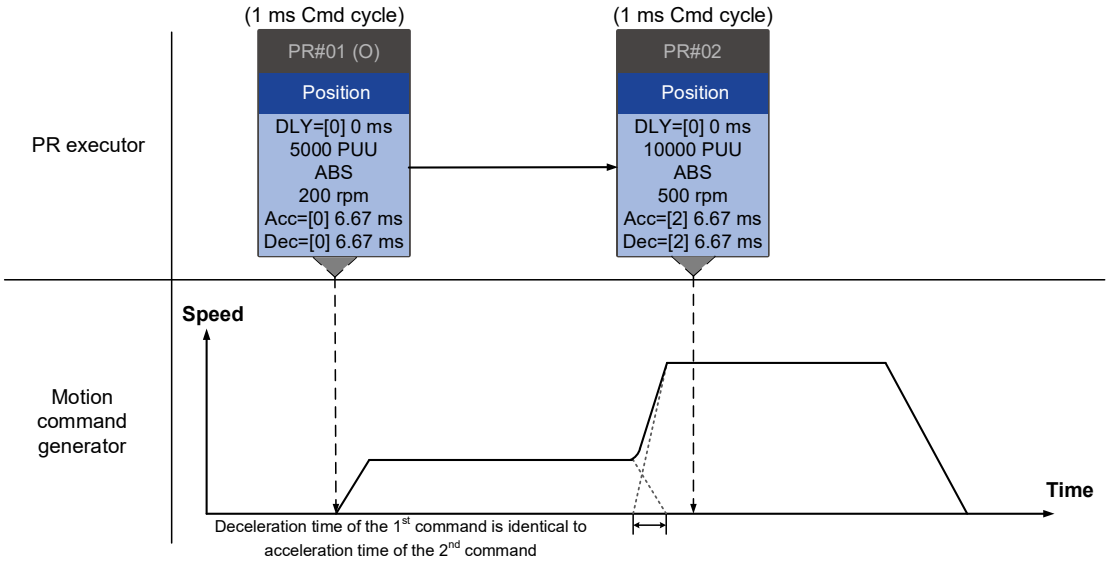

(b) Command overlapping - Acceleration and deceleration times are identical

Figure 7.1.6.11 Command overlapping

Interpreting the PR path flow

As mentioned earlier, the PR paths include the Sequence command, the Interrupt function, the Overlap function, and so on. The replacement, integration, and overlapping of commands lead to different motion behaviors depending on the settings. The suggested steps to interpret a series of PR paths are as follows.

1. Check the command sequence. Check whether there are delay time (DLY) and Interrupt (INS) function because these two settings change the command execution sequence.
2. Find the lead PR and identify the PR groups of each millisecond.
3. In each PR group of 1 millisecond, only the last motion command is executed. Meanwhile, the Jump and Write commands are immediately executed in the PR executor.
4. Position commands are integrated based on the principle described in Section 7.1.3.3.

7.1.7 Data array

The data array stores up to 800 sets (0 - 799) of 32-bit data. Set P2.008 to 30 and then 35 to write the data to EEPROM; otherwise, the data in RAM is volatile.

You can read data from or write data to the data array with parameter settings through the drive panel or communication. The parameters for reading and writing the data array are P5.011 to P5.013. P5.011 specifies the address of data array to be read and written. P5.012 and P5.013 read data from or write data to the data array address set by P5.011. The behaviors after reading and writing are different between P5.012 and P5.013. Refer to Table 7.1.7.1 for more information.

Table 7.1.7.1 Parameters for reading and writing the data array

Parameter	Description		
P5.011 Address for reading and writing	Specifies the data array address for reading and writing		
Window for reading and writing	Read / write through	Behavior after reading	Behavior after writing
P5.012 Window #1 for reading and writing	Drive panel	**Value of P5.011 does not add 1**	Value of P5.011 adds 1
	Communication	Value of P5.011 adds 1	Value of P5.011 adds 1
P5.013 Window #2 for reading and writing	Drive panel	Value of P5.011 adds 1	**Not writable through drive panel**
	Communication	Value of P5.011 adds 1	Value of P5.011 adds 1

Example: reading and writing the data array through the drive panel or communication.

Write values to the data array addresses in the following sequence: Data array #11 = 100, Data array #12 = 200, Data array #13 = 300. Then, read the data in the same sequence.

1. Read / write through the drive panel:

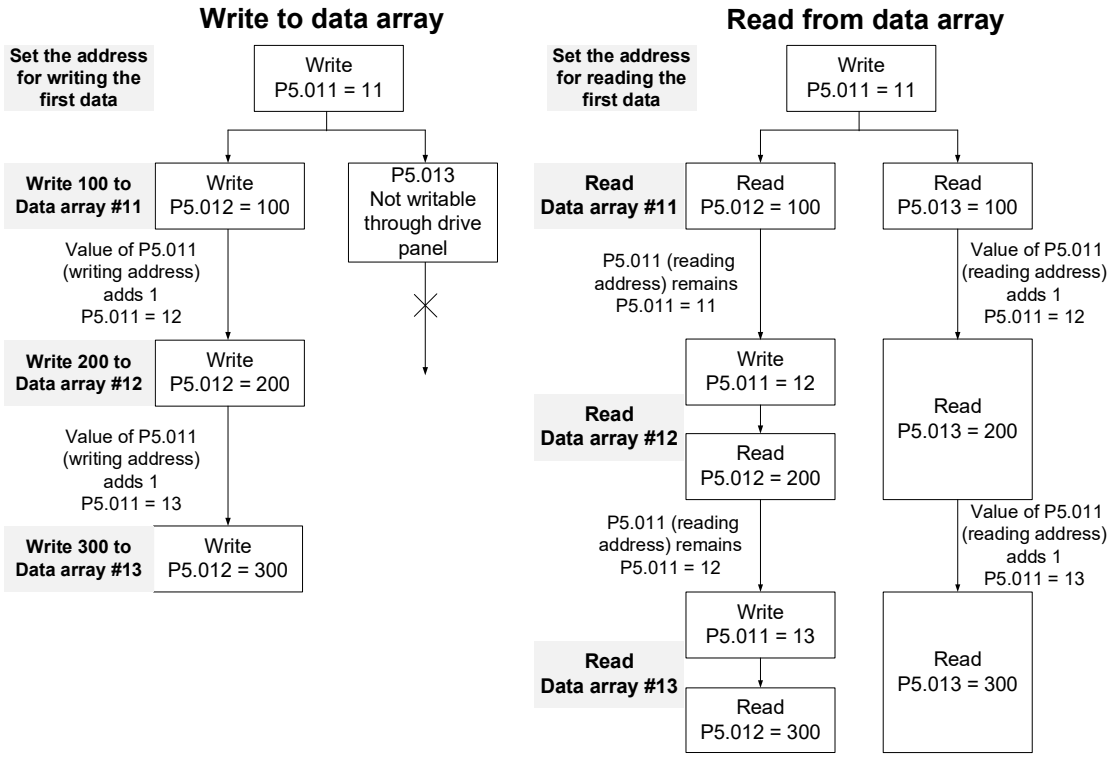

2. Read / write through communication:

To read from or write to the data array through Modbus, use the communication command 0x10 to write consecutively, 0x06 to write single data, and 0x03 to read consecutively. First, use the consecutive writing command to write 100 to Data array #11, 200 to Data array #12, and 300 to Data array #13.

When reading, use the single data writing command to set the start address as Data array #11, and then use the consecutive reading command to read P5.011 - P5.013 (Data array #11 and #12). Since P5.011 has been read twice, its value is incremented by 2, and you can continue to read from Data array #13.

Writing to the data array									
Packet	Communication command	Start address	Data length	P5.011		P5.012		P5.013	
				Low byte	High byte	Low word	High word	Low word	High word
1	0x10	P5.011	6 words	11	0	100	0	200	0
2	0x10	P5.011	6 words	13	0	300	0	0	0
Reading from the data array									
Packet	Communication command	Start address	Data length	P5.011		P5.012		P5.013	
				Low byte	High byte	Low word	High word	Low word	High word
3	0x06	P5.011	-	11	0	-	-	-	-
4	0x03	P5.011	6 words	11	0	100	0	200	0
5	0x03	P5.011	6 words	13	0	300	0	0	0

(This page is intentionally left blank.)

Parameters

8

This chapter introduces the parameter settings of the servo drive, as well as the descriptions for digital input (DI), digital output (DO), and monitoring variables. You can control the drive functions with these parameters and DI/O.

8.1 Parameter definitions ····· 8-2
8.2 Parameter descriptions ····· 8-3
P0.xxx Monitoring parameters ····· 8-3
P1.xxx Basic parameters ····· 8-18
P2.xxx Extension parameters ····· 8-46
P3.xxx Communication parameters ····· 8-73
P4.xxx Diagnosis parameters ····· 8-76
P5.xxx Motion control parameters ····· 8-83
P6.xxx PR parameters ····· 8-104
P7.xxx PR parameters ····· 8-127
Table 8.1 Digital input (DI) descriptions ····· 8-133
Table 8.2 Digital output (DO) descriptions ····· 8-140
Table 8.3 Monitoring variables descriptions ····· 8-146

8.1 Parameter definitions

The servo drive parameters are divided into the following groups. The first character after the start code P is the group number and the following three characters are the parameter indicator. The communication address is the combination of the group number and the three-digit number, expressed in hexadecimal.

The parameter groups are:

Group 0: Monitoring parameters (Example: P0.xxx)
Group 1: Basic parameters (Example: P1.xxx)
Group 2: Extension parameters (Example: P2.xxx)
Group 3: Communication parameters (Example: P3.xxx)
Group 4: Diagnosis parameters (Example: P4.xxx)
Group 5: Motion control parameters (Example: P5.xxx)
Group 6: PR parameters (Example: P6.xxx)
Group 7: PR parameters (Example: P7.xxx)

Control mode description:

PT: Position control (command input through terminal block)
PR: Position control (command sent from internal register)
S: Speed control
T: Torque control

Special symbol description:

Icon of parameter property	Description
★	Read-only parameter. You can only read the value of the parameter.
▲	Parameter cannot be changed when servo is in the Servo On state.
●	Parameter changes become valid after power cycling.
■	Parameter resets to its default value after power cycling.

8.2 Parameter descriptions

P0.xxx Monitoring parameters

P0.000★	Firmware version		Address: 0000H 0001H
Default:	Factory setting	Control mode:	All
Unit:	-	Setting range:	-
Format:	DEC	Data size:	16-bit
Model:	E3C-L, E3C-L1		

Settings:

Displays the firmware version of the servo drive.

P0.001■	Current drive alarm code (seven-segment display)		Address: 0002H 0003H
Default:	-	Control mode:	All
Unit:	-	Setting range:	0x0000: alarm clear (same as DI.ARST). 0x0001 to 0xFFFF: displays the alarm code (not writable).
Format:	HEX	Data size:	16-bit
Model:	E3C-L, E3C-L1		

Settings:

For the list of alarms, refer to Section 11.1 Alarm list.

P0.002	Drive status		Address: 0004H 0005H
Default:	1	Control mode:	All
Unit:	-	Setting range:	-4095 to +127
Format:	DEC	Data size:	16-bit
Model:	E3C-L, E3C-L1		

Settings:

Input the monitoring code into P0.002 to view changes to the variable on the panel. For the list of monitoring variables, refer to Table 8.3 Monitoring variables descriptions.

8

P0.003	Analog output monitoring		Address: 0006H 0007H
Default:	0x0000	Control mode:	All
Unit:	-	Setting range:	0x0000 to 0x0077
Format:	HEX	Data size:	16-bit
Model:	E3C-L, E3C-L1		

Settings:



X	MON2 value	Z	Reserved
Y	MON1 value	U	Reserved

MON1 and MON2 values	Description	MON1 and MON2 values	Description
0	Motor speed (+/- 8 volts / Maximum speed)	4	Torque command (+/- 8 volts / Maximum Torque command)
1	Motor torque (+/- 8 volts / Maximum torque)	5	VBUS voltage (+/- 8 volts / 450V)
2	Pulse command frequency (+/- 8 volts / 4.5 Mpps)	6	Analog output voltage is the set value of P1.101
3	Speed command (+/- 8 volts / Maximum Speed command)	7	Analog output voltage is the set value of P1.102

Note: refer to P1.004 and P1.005 for the ratio settings for the analog output voltage.

For example: when you set P0.003 to 0x0001 (MON1 is the analog output of motor speed; MON2 is the analog output of motor torque):

$$\text{MON1 output voltage} = 8 \times \frac{\text{Motor speed}}{(\text{Maximum speed} \times \frac{P1.004}{100})} \text{ (Unit: volts)}$$

$$\text{MON2 output voltage} = 8 \times \frac{\text{Motor speed}}{(\text{Maximum speed} \times \frac{P1.005}{100})} \text{ (Unit: volts)}$$

P0.004 - P0.007	Reserved

P0.008★	Total servo drive operation time		Address: 0010H 0011H
Default:	0x00000000	Control mode:	All
Unit:	hour	Setting range:	0x00000000 to 0xFFFFFFFF
Format:	HEX	Data size:	32-bit
Model:	E3C-L, E3C-L1		

Settings:



DCBA	Total Servo On time	UZYX	Total power-on time

Displays the total power-on time and Servo On time of the servo drive from the date of shipment. The time is in hours and durations of less than 1 hour are not recorded. The recorded hours are non-volatile.

P0.009★■	Status monitoring register 1		Address: 0012H 0013H
Default:	-	Control mode:	All
Unit:	-	Setting range:	-
Format:	DEC	Data size:	32-bit
Model:	E3C-L, E3C-L1		

Settings:

Set the status to be read from P0.009 in P0.017 through the drive panel or communication (refer to P0.002). To access the status data, read the communication addresses through the communication port or monitor the value through the panel (set P0.002 to 23, and the panel displays “VAR-1” and then the value of P0.009).

For example, when you set P0.017 to 7, reading P0.009 can access the motor speed (rpm). To access the data through Modbus communication, have the servo drive read two 16-bit values (0012H and 0013H) as a single 32-bit value. (0013H : 0012H) = (High word : Low word). To monitor the data through the drive panel, set P0.002 to 23 and the panel displays “VAR-1” and then the value of P0.009.

P0.010★■	Status monitoring register 2		Address: 0014H 0015H
Default:	-	Control mode:	All
Unit:	-	Setting range:	-
Format:	DEC	Data size:	32-bit
Model:	E3C-L, E3C-L1		

Settings:

Set the status to be read from P0.010 in P0.018 through the drive panel or communication (refer to P0.002). To access the status data, read the communication addresses through the communication port or monitor the value through the panel (set P0.002 to 24, and the panel displays “VAR-2” and then the value of P0.010).

P0.011★■	Status monitoring register 3		Address: 0016H 0017H
Default:	-	Control mode:	All
Unit:	-	Setting range:	-
Format:	DEC	Data size:	32-bit
Model:	E3C-L, E3C-L1		

Settings:

Set the status to be read from P0.011 in P0.019 through the drive panel or communication (refer to P0.002). To access the status data, read the communication addresses through the communication port or monitor the value through the panel (set P0.002 to 25, and the panel displays “VAR-3” and then the value of P0.011).

8

P0.012★■	Status monitoring register 4		Address: 0018H 0019H
Default:	-	Control mode:	All
Unit:	-	Setting range:	-
Format:	DEC	Data size:	32-bit
Model:	E3C-L, E3C-L1		

Settings:

Set the status to be read from P0.012 in P0.020 through the drive panel or communication (refer to P0.002). To access the status data, read the communication addresses through the communication port or monitor the value through the panel (set P0.002 to 26, and the panel displays “VAR-4” and then the value of P0.012).

P0.013★■	Status monitoring register 5		Address: 001AH 001BH
Default:	-	Control mode:	All
Unit:	-	Setting range:	-
Format:	DEC	Data size:	32-bit
Model:	E3C-L, E3C-L1		

Settings:

Set the status to be read from P0.013 in P0.021 through the drive panel or communication (refer to P0.002). To access the status data, read the communication addresses through the communication port.

P0.014 - P0.016	Reserved

P0.017	Specifying content of status monitoring register 1		Address: 0022H 0023H
Default:	0	Control mode:	All
Unit:	-	Setting range:	-4095 to +127
Format:	DEC	Data size:	16-bit
Model:	E3C-L, E3C-L1		

Settings:

Refer to Table 8.3 for the available values.

For example, if you set P0.017 to 7, then reading P0.009 can access the motor speed (rpm).

P0.018	Specifying content of status monitoring register 2		Address: 0024H 0025H
Default:	0	Control mode:	All
Unit:	-	Setting range:	-4095 to +127
Format:	DEC	Data size:	16-bit
Model:	E3C-L, E3C-L1		

Settings:

Refer to Table 8.3 for the available values.

P0.019	Specifying content of status monitoring register 3		Address: 0026H 0027H
Default:	0	Control mode:	All
Unit:	-	Setting range:	-4095 to +127
Format:	DEC	Data size:	16-bit
Model:	E3C-L, E3C-L1		

Settings:

Refer to Table 8.3 for the available values.

P0.020	Specifying content of status monitoring register 4		Address: 0028H 0029H
Default:	0	Control mode:	All
Unit:	-	Setting range:	-4095 to +127
Format:	DEC	Data size:	16-bit
Model:	E3C-L, E3C-L1		

Settings:

Refer to Table 8.3 for the available values.

P0.021	Specifying content of status monitoring register 5		Address: 002AH 002BH
Default:	0	Control mode:	All
Unit:	-	Setting range:	-4095 to +127
Format:	DEC	Data size:	16-bit
Model:	E3C-L, E3C-L1		

Settings:

Refer to Table 8.3 for the available values.

P0.022 - P0.024	Reserved

P0.025■	Mapping parameter 1		Address: 0032H 0033H
Default:	-	Control mode:	All
Unit:	-	Setting range:	-
Format:	HEX	Data size:	32-bit
Model:	E3C-L, E3C-L1		

Settings:

You can continuously read and write two different parameters faster with mapping parameters. Use P0.035 to specify the parameter numbers to be read or written with the mapping parameter through the panel or communication. The value of the parameter that is specified by P0.035 is shown in P0.025. Refer to P0.035 for its settings.

P0.026■	Mapping parameter 2		Address: 0034H 0035H
Default:	-	Control mode:	All
Unit:	-	Setting range:	-
Format:	HEX	Data size:	32-bit
Model:	E3C-L, E3C-L1		

Settings:

This setting is the same as P0.025, except its mapping target is set in P0.036.

P0.027■	Mapping parameter 3		Address: 0036H 0037H
Default:	-	Control mode:	All
Unit:	-	Setting range:	-
Format:	HEX	Data size:	32-bit
Model:	E3C-L, E3C-L1		

Settings:

This setting is the same as P0.025, except its mapping target is set in P0.037.

P0.028■	Mapping parameter 4		Address: 0038H 0039H
Default:	-	Control mode:	All
Unit:	-	Setting range:	-
Format:	HEX	Data size:	32-bit
Model:	E3C-L, E3C-L1		

Settings:

This setting is the same as P0.025, except its mapping target is set in P0.038.

P0.029■	Mapping parameter 5		Address: 003AH 003BH
Default:	-	Control mode:	All
Unit:	-	Setting range:	-
Format:	HEX	Data size:	32-bit
Model:	E3C-L, E3C-L1		

Settings:

This setting is the same as P0.025, except its mapping target is set in P0.039.

P0.030■	Mapping parameter 6		Address: 003CH 003DH
Default:	-	Control mode:	All
Unit:	-	Setting range:	-
Format:	HEX	Data size:	32-bit
Model:	E3C-L, E3C-L1		

Settings:

This setting is the same as P0.025, except its mapping target is set in P0.040.

P0.031■	Mapping parameter 7		Address: 003EH 003FH
Default:	-	Control mode:	All
Unit:	-	Setting range:	-
Format:	HEX	Data size:	32-bit
Model:	E3C-L, E3C-L1		

Settings:

This setting is the same as P0.025, except its mapping target is set in P0.041.

P0.032■	Mapping parameter 8		Address: 0040H 0041H
Default:	-	Control mode:	All
Unit:	-	Setting range:	-
Format:	HEX	Data size:	32-bit
Model:	E3C-L, E3C-L1		

Settings:

This setting is the same as P0.025, except its mapping target is set in P0.042.

P0.033 - P0.034	Reserved

P0.035	Target setting for mapping parameter P0.025		Address: 0046H 0047H
Default:	-	Control mode:	All
Unit:	-	Setting range:	-
Format:	HEX	Data size:	32-bit
Model:	E3C-L, E3C-L1		

8

Settings:

The formats of the parameter high word (PH) and parameter low word (PL) are:



BA	Hexadecimal code for the parameter index	YX	Hexadecimal code for the parameter index
C	Hexadecimal code for the parameter group	Z	Hexadecimal code for the parameter group
D	Reserved	U	Reserved

Select the corresponding parameter(s) for the data block access register 1 (P0.035). The mapping value is 32 bits and can map to two 16-bit parameters or one 32-bit parameter.

P0.035: (Parameter to be mapped: P0.035; Content of mapping parameter: P0.025)

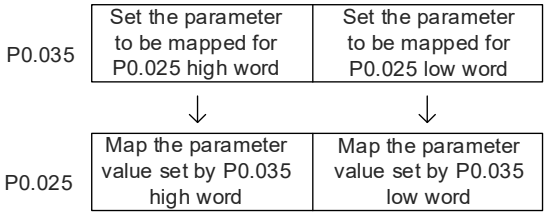

1. When PH ≠ PL, it indicates that the content of P0.025 includes two 16-bit parameters.

   Example: Target: set P2.003 to 5 and P2.005 to 100 through the mapping parameter.

   Setting: set the P0.035 high word to 0203 (P2.003) and low word to 0205 (P2.005). Thus, P0.035 = 0x02030205.

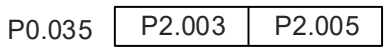

   Write: set 0x00050064 to the mapping parameter P0.025, and the values of P2.003 and P2.005 are:

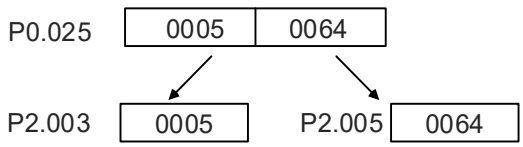

2. When PH = PL = P, it indicates that the content of P0.025 includes one 32-bit parameter.

   Example: Target: set P6.010 to 0x00050064 through the mapping parameter.

   Setting: set both the high word and low word of P0.035 to 060A (P6.010).

   Thus, P0.035 = 0x060A060A.

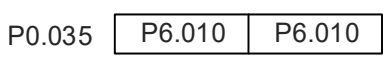

   Write: set 0x00050064 to the mapping parameter P0.025, and P6.010 changes immediately.

P0.036	Target setting for mapping parameter P0.026		Address: 0048H 0049H
Default:	-	Control mode:	All
Unit:	-	Setting range:	-
Format:	HEX	Data size:	32-bit
Model:	E3C-L, E3C-L1		

Settings:

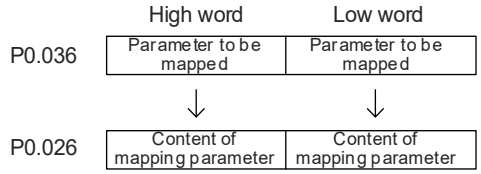

P0.037	Target setting for mapping parameter P0.027		Address: 004AH 004BH
Default:	-	Control mode:	All
Unit:	-	Setting range:	-
Format:	HEX	Data size:	32-bit
Model:	E3C-L, E3C-L1		

Settings:

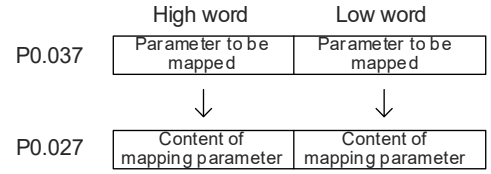

P0.038	Target setting for mapping parameter P0.028		Address: 004CH 004DH
Default:	-	Control mode:	All
Unit:	-	Setting range:	-
Format:	HEX	Data size:	32-bit
Model:	E3C-L, E3C-L1		

Settings:

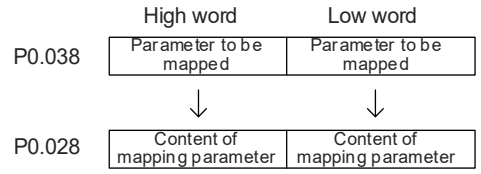

8

P0.039	Target setting for mapping parameter P0.029		Address: 004EH 004FH
Default:	-	Control mode:	All
Unit:	-	Setting range:	-
Format:	HEX	Data size:	32-bit
Model:	E3C-L, E3C-L1		

Settings:

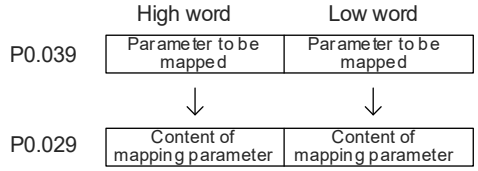

P0.040	Target setting for mapping parameter P0.030		Address: 0050H 0051H
Default:	-	Control mode:	All
Unit:	-	Setting range:	-
Format:	HEX	Data size:	32-bit
Model:	E3C-L, E3C-L1		

Settings:

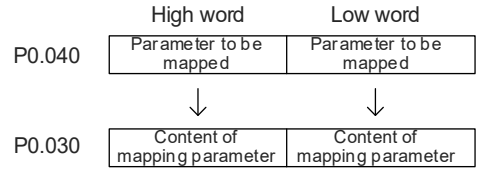

P0.041	Target setting for mapping parameter P0.031		Address: 0052H 0053H
Default:	-	Control mode:	All
Unit:	-	Setting range:	-
Format:	HEX	Data size:	32-bit
Model:	E3C-L, E3C-L1		

Settings:

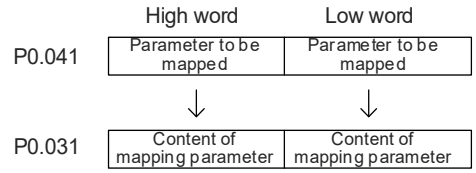

P0.042	Target setting for mapping parameter P0.032		Address: 0054H 0055H
Default:	-	Control mode:	All
Unit:	-	Setting range:	-
Format:	HEX	Data size:	32-bit
Model:	E3C-L, E3C-L1		

Settings:

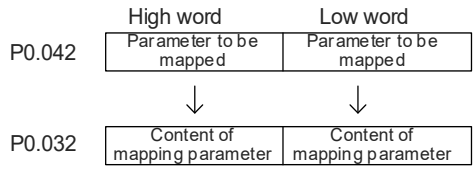

P0.043	Reserved

P0.044★■	Status monitoring register (for PC software)		Address: 0058H 0059H
Default:	0	Control mode:	All
Unit:	-	Setting range:	-
Format:	DEC	Data size:	32-bit
Model:	E3C-L, E3C-L1		

Settings:

This setting is the same as P0.009.

P0.045■	Specifying content of status monitoring register (for PC software)		Address: 005AH 005BH
Default:	0	Control mode:	All
Unit:	-	Setting range:	-4095 to +127
Format:	DEC	Data size:	16-bit
Model:	E3C-L, E3C-L1		

Settings:

This setting is the same as P0.017.

8

P0.046★■	Servo drive digital output (DO) status		Address: 005CH 005DH
Default:	0x0000	Control mode:	All
Unit:	-	Setting range:	0x0000 to 0xFFFF
Format:	HEX	Data size:	16-bit
Model:	E3C-L, E3C-L1		

Settings:

Bit	Status	Bit	Status
Bit 0	SRDY (servo ready)	Bit 8	HOME (homing complete)
Bit 1	SON (Servo On)	Bit 9	OLW (early warning for motor overload)
Bit 2	ZSPD (zero speed detection)	Bit 10	WARN (servo warning, CW, CCW, EMGS, undervoltage, or communication error)
Bit 3	TSPD (target speed reached)	Bit 11	Reserved
Bit 4	TPOS (target position reached)	Bit 12	Reserved
Bit 5	TQL (torque limit activated)	Bit 13	Reserved
Bit 6	ALRM (servo alarm)	Bit 14	Reserved
Bit 7	BRKR (electromagnetic brake control output)	Bit 15	Reserved

P0.047 - P0.048	Reserved

P0.049■	Updating encoder absolute position		Address: 0062H 0063H
Default:	0x0000	Control mode:	All
Unit:	-	Setting range:	0x0000 to 0x0002
Format:	HEX	Data size:	16-bit
Model:	E3C-L, E3C-L1		

Settings:



X	Command processing	Z	Reserved
Y	Reserved	U	Reserved

■ X: command processing

0: N/A

1: update the encoder data to P0.051 - P0.052.

2: update P0.051 - P0.052 and clear the position error. When this command takes effect, the motor's current position is set to the endpoint of the Position command.

P0.050★■	Absolute position system status		Address: 0064H 0065H
Default:	0x0000	Control mode:	All
Unit:	-	Setting range:	0x0000 to 0xFFFF
Format:	HEX	Data size:	16-bit
Model:	E3C-L, E3C-L1		

Settings:

Bit	7	6	5	4	3	2	1	0
Bit	15	14	13	12	11	10	9	8

Bit	Status	Description
Bit 0	Absolute position status	0: normal. 1: lost.
Bit 1	Battery voltage status	0: normal. 1: undervoltage.
Bit 2	Status of absolute number of revolutions	0: normal. 1: overflows.
Bit 3	PUU status	0: normal. 1: overflows.
Bit 4	Absolute position status	0: established. 1: not yet established.
Bit 5 - Bit 15	Reserved	-

P0.051★■	Encoder absolute position - number of revolutions		Address: 0066H 0067H
Default:	0	Control mode:	All
Unit:	rev	Setting range:	-32768 to +32767
Format:	DEC	Data size:	16-bit
Model:	E3C-L, E3C-L1		

Settings:

When P2.070 [Bit 1] = 1, P0.051 displays the encoder's absolute position in the form of number of revolutions.

When P2.070 [Bit 1] = 0, P0.051 becomes invalid and the panel displays 0.

P0.052★■	Encoder absolute position - pulse number within single turn or PUU		Address: 0068H 0069H
Default:	0	Control mode:	All
Unit:	pulse or PUU	Setting range:	0 to (16777216 minus 1) (pulse) -2147483648 to +2147483647 (PUU)
Format:	DEC	Data size:	32-bit
Model:	E3C-L, E3C-L1		

Settings:

When P2.070 [Bit 1] = 1, P0.052 displays the encoder's absolute position in the form of pulse number within a single turn.

When P2.070 [Bit 1] = 0, P0.052 displays the motor's absolute position in PUU.

8

P0.053	General range compare digital output - filter time		Address: 006AH 006BH
Default:	0x0000	Control mode:	All
Unit:	-	Setting range:	0x0000 to 0x000F
Format:	HEX	Data size:	16-bit
Model:	E3C-L, E3C-L1		

Settings:



X	First filter time	Z	Reserved
Y	Reserved	U	Reserved

Note: the minimum filter time is 1 ms (set value 0 = 1 ms; 1 = 2 ms; 2 = 3 ms; ...; F = 16 ms).

Only the first filter time is supported:

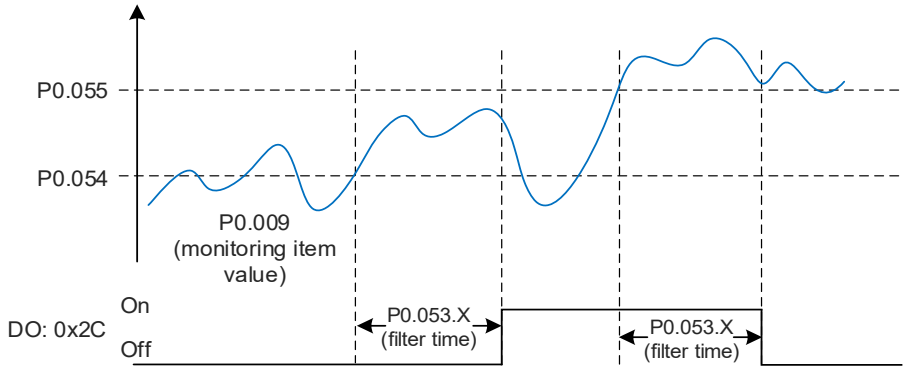

P0.054	General range compare digital output 1 - lower limit		Address: 006CH 006DH
Default:	0	Control mode:	All
Unit:	-	Setting range:	-2147483648 to +2147483647
Format:	DEC	Data size:	32-bit
Model:	E3C-L, E3C-L1		

Settings:

Before using this function, set the digital output function to 0x2C (first set of general range comparison) and the monitoring item of P0.017. When P0.009 (monitoring item value) is within the range defined by P0.054 and P0.055, and after the filter time set in P0.053.X has elapsed, this digital output is On.

P0.055	General range compare digital output 1 - upper limit		Address: 006EH 006FH
Default:	0	Control mode:	All
Unit:	-	Setting range:	-2147483648 to +2147483647
Format:	DEC	Data size:	32-bit
Model:	E3C-L, E3C-L1		

Settings:

Refer to the description of P0.054.

P0.056 - P0.062	Reserved

P0.063★	Total duration of DC Bus overvoltage		Address: 007EH 007FH
Default:	0	Control mode:	All
Unit:	ms	Setting range:	0 to 2147483647
Format:	DEC	Data size:	32-bit
Model:	E3C-L, E3C-L1		

Settings:

220V models: records the total time during which the voltage of the DC Bus exceeded 400V.

400V models: records the total time during which the voltage of the DC Bus exceeded 740V.

P0.064 - P0.068	Reserved

8

P1.xxx Basic parameters

P1.000▲	External pulse input type		Address: 0100H 0101H
Default:	0x1002	Control mode:	PT
Unit:	-	Setting range:	0x0000 to 0x1142
Format:	HEX	Data size:	16-bit
Model:	E3C-L, E3C-L1		

Settings:



X	Pulse type	Z	Logic type
Y	Filter width	U	High speed / low speed pulse

- X: pulse type

  0: A phase + B phase pulse (4x)

  1: clockwise and counterclockwise pulses

  2: pulse train + sign

- Z: logic type

  0: positive logic

  1: negative logic

  Digital circuits use 0 and 1 to represent the high and low voltage levels. In positive logic, 1 represents high voltage and 0 represents low voltage; in negative logic, 1 represents low voltage and 0 represents high voltage.

  Example:

Positive logic



Negative logic

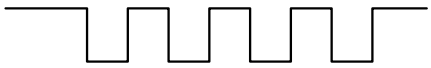

Logic type	Pulse type	Pulse input	
		Forward	Reverse
Z = 0	X = 0	Pulse phase lead	Pulse phase lag
		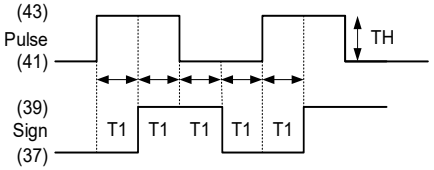	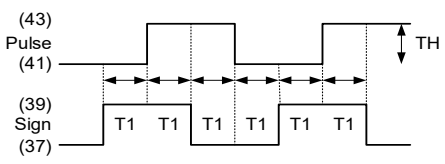
	X = 1	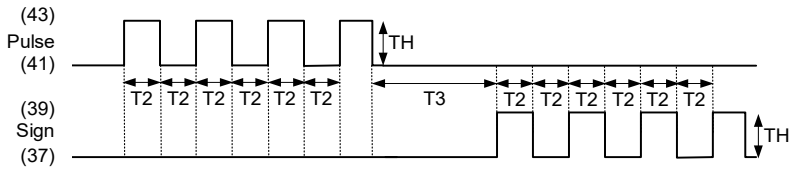	
	X = 2	Sign = low	Sign = high
		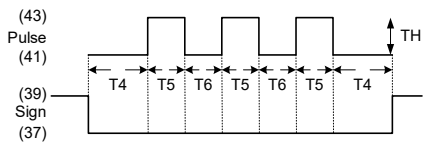	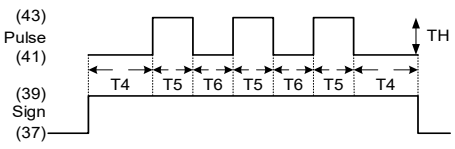

■ Y: filter width

If the pulse frequency is suddenly too high, causing a pulse width smaller than the set filter width, then this pulse gets filtered out as noise. Therefore, set the filter width smaller than the actual pulse width. The filter width setting should be one quarter (1/4) of the actual pulse width or less.

Y value	Min. pulse width (low speed filter frequency)	Min. pulse width (high speed filter frequency)
0	600 ns (0.83 Mpps)	150 ns (3.33 Mpps)
1	2.4 μs (208 Kpps)	600 ns (0.83 Mpps)
2	4.8 μs (104 Kpps)	1.2 μs (416 Kpps)
3	9.6 μs (52 Kpps)	2.4 μs (208 Kpps)
4	No filter function	No filter function

Example:

When the external pulse input source is high speed differential signal and Y = 0, the high speed filter width is 3.33 Mpps.

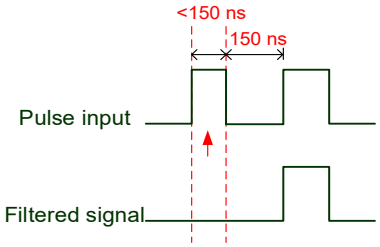

If the pulse width is smaller than 150 ns, the pulse is regarded as low level, and thus two input pulses will be regarded as one pulse.

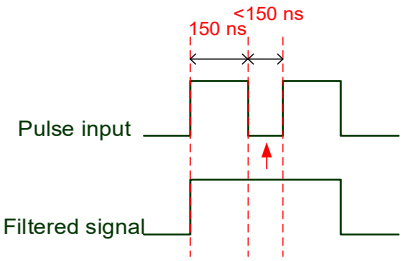

If the pulse width is smaller than 150 ns, the pulse is regarded as high level, and thus two input pulses will be regarded as one pulse.

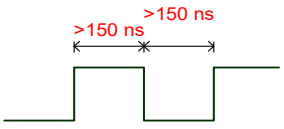

When the pulse width at high or low level is larger than 150 ns, then the pulse is not filtered out.

If you use a 2 - 4 MHz input pulse, setting Y = 4 to disable the filter function is suggested.

Note: when the signal is a 4 Mpps high speed pulse and Y = 4, then the pulse is not filtered out.

■ U: high speed / low speed pulse

Pulse	Parameter setting	Pulse type		Max. input frequency	Voltage	Forward current
High speed pulse	U = 1	Differential signal	Pulse train + sign	4 Mpps	5V	< 25 mA
			CW and CCW pulses			
			A phase + B phase	8 Mpps		
Low speed pulse	U = 0	Differential signal		200 Kpps	5V	< 25 mA
		Open-collector		200 Kpps	24V (Max.)	< 25 mA

Pulse type		Max. input frequency	Min. allowable time width					
			T1	T2	T3	T4	T5	T6
Differential signal	Pulse train + sign	4 Mpps	62.5 ns	125 ns	250 ns	200 ns	125 ns	125 ns
	CW and CCW pulses							
	A phase + B phase	8 Mpps	125 ns	250 ns	250 ns	200 ns	250 ns	250 ns
Open-collector		200 Kpps	5 μs	2.5 μs	5 μs	5 μs	2.5 μs	2.5 μs

Note: when the signal is A phase + B phase pulse, the frequencies in the preceding table are the quadrupled frequencies.

P1.001●	Input for control mode and control command		Address: 0102H 0103H
Default:	0x0000	Control mode:	All
Unit:	-	Setting range:	0x0000 to 0x111F
Format:	HEX	Data size:	16-bit
Model:	E3C-L, E3C-L1		

Settings:



U Z YX

YX	Control mode setting	Z	Direction control
-	-	U	DIO value control

■ YX: control mode setting

Mode	PT	PR	S	T	Sz	Tz
00	▲					
01		▲				
02			▲			
03				▲		
04					▲	
05						▲
Dual mode						
06	▲		▲			
07	▲			▲		
08		▲	▲			
09		▲		▲		
0A			▲	▲		
0D	▲	▲				
Multiple modes						
0E	▲	▲	▲			
0F	▲	▲		▲		

PT: Position control mode; the command source is from the external pulse.

PR: Position control mode; the command source is from the 64 sets of internal registers which you can select with DI.POS0 - DI.POS5. Multiple homing methods are also available.

S: Speed control mode; the command source is from the external analog voltage and internal speed registers which you can select with DI.SPD0 and DI.SPD1.

T: Torque control mode; the command source is from the external analog voltage and internal torque registers which you can select with DI.TCM0 and DI.TCM1.

Sz: Speed control mode; the speed command is zero or the command source is from the internal speed registers which you can select with DI.SPD0 and DI.SPD1.

Tz: Torque control mode; the torque command is zero or the command source is from the internal torque registers which you can select with DI.TCM0 and DI.TCM1.

Dual mode: you can switch between two modes with the external DI. For example, you can use DI.S-P to switch the dual mode of S-PT (control mode setting: 06). Refer to Table 8.1 for further information.

Multiple modes: you can switch between three modes with the external DI. For example, you can use DI.S-P and DI.PT-PR to switch the multiple modes of PT-PR-S (control mode setting: 0E). Refer to Table 8.1 for further information.

Note: if the command source is the external analog voltage, make sure to connect the voltage source properly to avoid floating connection causing misoperation.

- Z: direction control

	Z = 0	Z = 1
Positive direction	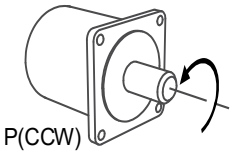	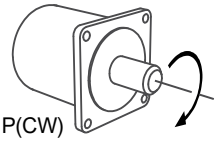
Negative direction	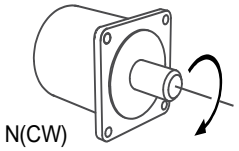	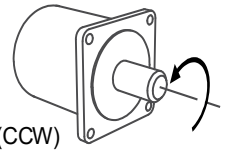

- U: DIO value control (volatile)

  0: when modes are switched, DIO settings remain the same.

  1: when modes are switched, DIO settings are reset to the default for each mode.

  Note: different servo drive models have different default settings for each mode; refer to Chapter 3.

P1.002▲	Speed and torque limits		Address: 0104H 0105H
Default:	0x0000	Control mode:	All
Unit:	-	Setting range:	0x0000 to 0x0011
Format:	HEX	Data size:	16-bit
Model:	E3C-L, E3C-L1		

Settings:



X	Disable / enable Speed Limit function	Z	Reserved
Y	Disable / enable Torque Limit function	U	Reserved

- X: disable / enable Speed Limit function

  0: disable Speed Limit function

  1: enable Speed Limit function (only available in T and Tz modes)

  See the following diagram for Speed Limit setting:

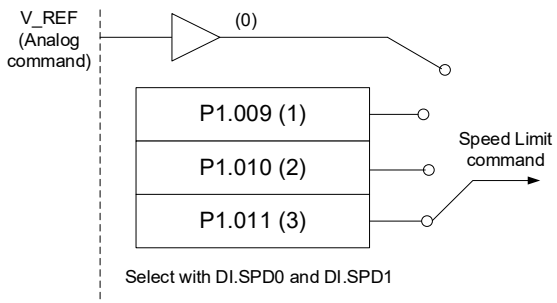

8

- Y: disable / enable Torque Limit function

  0: disable Torque Limit function

  1: enable Torque Limit function

  See the following diagram for Torque Limit setting:

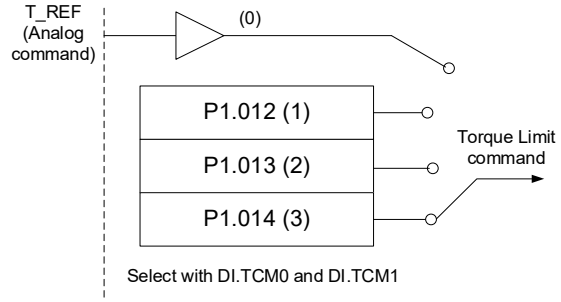

  Important: you can enable or disable the Torque Limit function with P1.002.Y or DI.TRQLM (0x09); using DI.TRQLM is more flexible, but it occupies a DI setting.

P1.003	Encoder pulse output polarity		Address: 0106H 0107H
Default:	0x0000	Control mode:	All
Unit:	-	Setting range:	0x0000 to 0x0213
Format:	HEX	Data size:	16-bit
Model:	E3C-L, E3C-L1		

Settings:



X	Polarity of monitor analog output	Z	Reserved
Y	Direction of encoder pulse output	U	Reserved

- X: polarity of monitor analog output

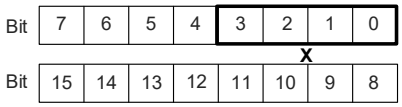

Bit	Function	Description
Bit 0	MON2 polarity	0: MON2(+) 1: MON2(-)
Bit 1	MON1 polarity	0: MON1(+) 1: MON1(-)
Bit 2 - Bit 3	Reserved	-

- Y: direction of encoder pulse output

  0: forward

  1: reverse

P1.004	MON1 analog monitor output ratio		Address: 0108H 0109H
Default:	100	Control mode:	All
Unit:	% (full scale)	Setting range:	0 to 100
Format:	DEC	Data size:	16-bit
Model:	E3C-L, E3C-L1		

Settings:

Refer to P0.003 for the analog output setting.

Example:

If the analog voltage output is 8V when the motor speed is 1,000 rpm and the maximum speed of the motor is 5,000 rpm, the P1.004 setting is as follows.

$$P1.004 = \frac{\text{Required speed}}{\text{Maximum speed}} \times 100\% = \frac{1000\ \text{rpm}}{5000\ \text{rpm}} \times 100\% = 20\%$$

You can calculate the voltage output corresponding to the current motor speed with the following formula.

Motor speed	MON1 analog monitor output
300 rpm	$MON1 = 8V \times \frac{\text{Current speed}}{\text{Maximum speed} \times \frac{P1.004}{100}} \times 100\% = 8V \times \frac{300\ \text{rpm}}{5000\ \text{rpm} \times \frac{20}{100}} \times 100\% = 2.4V$
900 rpm	$MON1 = 8V \times \frac{\text{Current speed}}{\text{Maximum speed} \times \frac{P1.004}{100}} \times 100\% = 8V \times \frac{900\ \text{rpm}}{5000\ \text{rpm} \times \frac{20}{100}} \times 100\% = 7.2V$

P1.005	MON2 analog monitor output ratio		Address: 010AH 010BH
Default:	100	Control mode:	All
Unit:	% (full scale)	Setting range:	0 to 100
Format:	DEC	Data size:	16-bit
Model:	E3C-L, E3C-L1		

Settings:

Refer to P0.003 for the analog output setting.

P1.006	Speed command - smoothing constant (low-pass filter)		Address: 010CH 010DH
Default:	0	Control mode:	S / Sz
Unit:	ms	Setting range:	0 to 1000
Format:	DEC	Data size:	16-bit
Model:	E3C-L, E3C-L1		

Settings:

0: disable this function.

P1.007	Torque command - smoothing constant (low-pass filter)		Address: 010EH 010FH
Default:	0	Control mode:	T / Tz
Unit:	ms	Setting range:	0 to 1000
Format:	DEC	Data size:	16-bit
Model:	E3C-L, E3C-L1		

Settings:

0: disable this function.

P1.008	Position command - smoothing constant (low-pass filter)		Address: 0110H 0111H
Default:	0	Control mode:	PT / PR
Unit:	10 ms	Setting range:	0 to 1000
Format:	DEC	Data size:	16-bit
Model:	E3C-L, E3C-L1		

Settings:

0: disable this function.

P1.009	Internal Speed command 1 / internal speed limit 1		Address: 0112H 0113H
Default:	1000	Control mode:	S / Sz: internal Speed command 1 T / Tz: internal speed limit 1
Unit:	0.1 rpm	Setting range:	-75000 to +75000
Format:	DEC	Data size:	32-bit
Model:	E3C-L, E3C-L1		

Settings:

Internal Speed command 1: first internal Speed command.

Internal speed limit 1: first internal speed limit.

Example of internal speed limit:

Speed limit value of P1.009	Valid speed range	Speed limit in forward direction	Speed limit in reverse direction
1000	-100 to +100 rpm	100 rpm	-100 rpm
-1000			

P1.010	Internal Speed command 2 / internal speed limit 2		Address: 0114H 0115H
Default:	2000	Control mode:	S / Sz: internal Speed command 2 T / Tz: internal speed limit 2
Unit:	0.1 rpm	Setting range:	-75000 to +75000
Format:	DEC	Data size:	32-bit
Model:	E3C-L, E3C-L1		

Settings:

Internal Speed command 2: second internal Speed command.

Internal speed limit 2: second internal speed limit.

See the example in P1.009.

P1.011	Internal Speed command 3 / internal speed limit 3		Address: 0116H 0117H
Default:	3000	Control mode:	S / Sz: internal Speed command 3 T / Tz: internal speed limit 3
Unit:	0.1 rpm	Setting range:	-75000 to +75000
Format:	DEC	Data size:	32-bit
Model:	E3C-L, E3C-L1		

Settings:

Internal Speed command 3: third internal Speed command.

Internal speed limit 3: third internal speed limit.

See the example in P1.009.

P1.012	Internal Torque command 1 / internal torque limit 1		Address: 0118H 0119H
Default:	100	Control mode:	T / Tz: internal Torque command 1 PT / PR / S / Sz: internal torque limit 1
Unit:	%	Setting range:	-5000 to +5000
Format:	DEC	Data size:	16-bit
Model:	E3C-L, E3C-L1		

Settings:

Internal Torque command 1: first internal Torque command.

Internal torque limit 1: first internal torque limit.

Example of internal torque limit:

Torque limit value of P1.012	Valid torque range	Torque limit in forward direction	Torque limit in reverse direction
35	-35% to +35%	35%	-35%
-35			

P1.013	Internal Torque command 2 / internal torque limit 2		Address: 011AH 011BH
Default:	100	Control mode:	T / Tz: internal Torque command 2 PT / PR / S / Sz: internal torque limit 2
Unit:	%	Setting range:	-5000 to +5000
Format:	DEC	Data size:	16-bit
Model:	E3C-L, E3C-L1		

Settings:

Internal Torque command 2: second internal Torque command.

Internal torque limit 2: second internal torque limit.

See the example in P1.012.

8

P1.014	Internal Torque command 3 / internal torque limit 3		Address: 011CH 011DH
Default:	100	Control mode:	T / Tz: internal Torque command 3 PT / PR / S / Sz: internal torque limit 3
Unit:	%	Setting range:	-5000 to +5000
Format:	DEC	Data size:	16-bit
Model:	E3C-L, E3C-L1		

Settings:

Internal Torque command 3: third internal Torque command.

Internal torque limit 3: third internal torque limit.

See the example in P1.012.

P1.015 - P1.021	Reserved

P1.022	PR command special filter		Address: 012CH 012DH
Default:	0x0000	Control mode:	PR
Unit:	-	Setting range:	0x0000 to 0x107F
Format:	HEX	Data size:	16-bit
Model:	E3C-L, E3C-L1		

Settings:



YX	Acceleration / deceleration time limit	Z	Reserved
-	-	U	Reverse inhibit

■ YX: acceleration / deceleration time limit (0 - 1270 ms)

If the PR Speed command changes too drastically, it causes mechanical vibration. Set the acceleration / deceleration time limit (the time required for the motor to accelerate from 0 to 3,000 rpm or to decelerate from 3,000 rpm to 0) with this function. If the acceleration / deceleration time of the command is shorter than this limit, the filter takes effect to smooth the acceleration / deceleration which prevents the command from changing too drastically and causing mechanical vibration. When the filter is functioning, the following error caused by the smooth command is automatically compensated after the command is smoothed, so the final position is not deviated.

Example:

Set YX to 12 (data format is HEX and unit is 10 ms) and thus the acceleration / deceleration time limit is 180 ms. If the acceleration / deceleration time of the PR Speed command is shorter than 180 ms, the filter takes effect. If the acceleration / deceleration time of the PR Speed command is longer than 180 ms, the filter does not take effect.

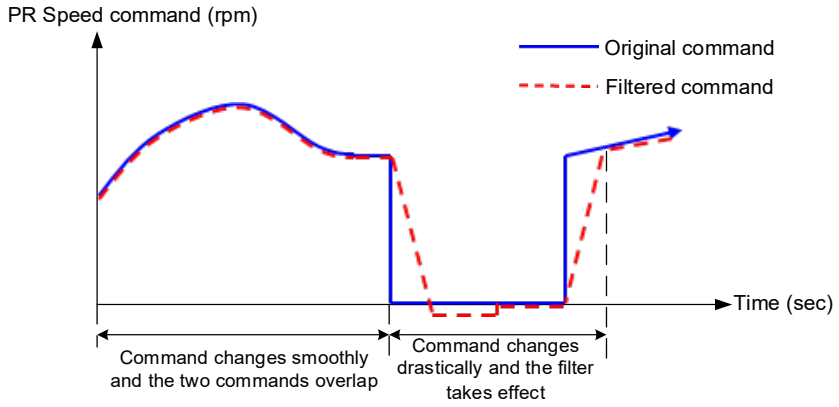

Note: if the command keeps changing drastically, the following error of the internal position exceeds the allowable range and then triggers AL404.

■ U: reverse inhibit

0: disable this function

1: enable this function. When the value of the current PR Position command is lower than that of the previous position command, the motor does not move.

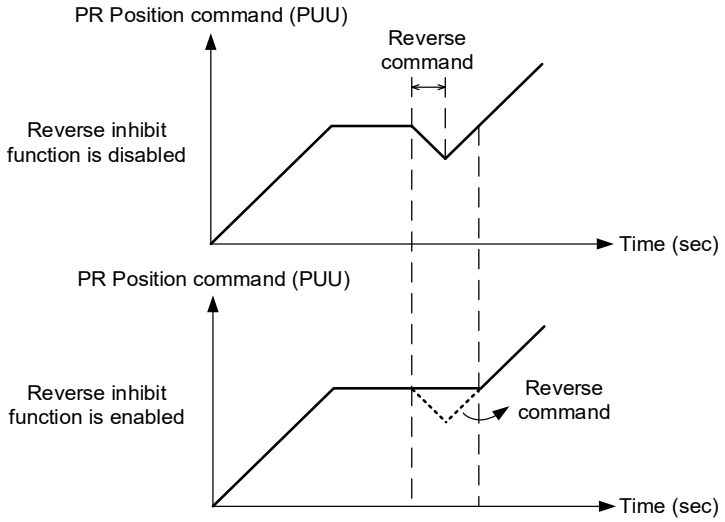

P1.023 - P1.024	Reserved

P1.025	Low-frequency vibration suppression frequency 1		Address: 0132H 0133H
Default:	1000	Control mode:	PT / PR
Unit:	0.1 Hz	Setting range:	10 to 1000
Format:	DEC	Data size:	16-bit
Model:	E3C-L, E3C-L1		

Settings:

The frequency of the first low-frequency vibration suppression filter. Setting P1.026 to 0 disables the first low-frequency vibration suppression filter.

P1.026	Low-frequency vibration suppression gain 1		Address: 0134H 0135H
Default:	0	Control mode:	PT / PR
Unit:	-	Setting range:	0 to 9
Format:	DEC	Data size:	16-bit
Model:	E3C-L, E3C-L1		

Settings:

The gain of the first low-frequency vibration suppression filter. Increasing the value improves the position response. If you set the value too high, the motor may not operate smoothly. The suggested value is 1. Setting P1.026 to 0 disables the first low-frequency vibration suppression filter.

P1.027	Low-frequency vibration suppression frequency 2		Address: 0136H 0137H
Default:	1000	Control mode:	PT / PR
Unit:	0.1 Hz	Setting range:	10 to 1000
Format:	DEC	Data size:	16-bit
Model:	E3C-L, E3C-L1		

Settings:

The frequency of the second low-frequency vibration suppression filter. Setting P1.028 to 0 disables the second low-frequency vibration suppression filter.

P1.028	Low-frequency vibration suppression gain 2		Address: 0138H 0139H
Default:	0	Control mode:	PT / PR
Unit:	-	Setting range:	0 to 9
Format:	DEC	Data size:	16-bit
Model:	E3C-L, E3C-L1		

Settings:

The gain of the second low-frequency vibration suppression filter. Increasing the value improves the position response. If you set the value too high, the motor may not operate smoothly. The suggested value is 1. Setting P1.028 to 0 disables the second low-frequency vibration suppression filter.

P1.029	Auto low-frequency vibration suppression mode		Address: 013AH 013BH
Default:	0	Control mode:	PT / PR
Unit:	-	Setting range:	0 to 1
Format:	DEC	Data size:	16-bit
Model:	E3C-L, E3C-L1		

Settings:

Setting value	Description
0	Disable the automatic low-frequency vibration detection function.
1	Vibration suppression is in automatic mode. When the vibration frequency cannot be detected or the vibration frequency is stable, the system automatically resets the parameter to 0 and saves the vibration suppression frequency to P1.025.

P1.030	Low-frequency vibration detection		Address: 013CH 013DH
Default:	8000	Control mode:	PT / PR
Unit:	pulse	Setting range:	1 to 128000
Format:	DEC	Data size:	32-bit
Model:	E3C-L, E3C-L1		

Settings:

Sets the detection level when automatic vibration suppression is enabled (P1.029 = 1). Setting P1.030 lower improves the detection sensitivity, but the system may treat noise or minor low-frequency vibrations as frequencies to be suppressed. Setting P1.030 higher reduces the possibility of misjudgment, but if the mechanical vibration is small, the system may not properly detect low-frequency vibrations.

P1.031	Reserved

P1.032	Motor stop mode		Address: 0140H 0141H
Default:	0x0000	Control mode:	All
Unit:	-	Setting range:	0x0000 to 0x0060
Format:	HEX	Data size:	16-bit
Model:	E3C-L, E3C-L1		

Settings:



X	Reserved	Z	Reserved
Y	Motor stop mode	U	Reserved

■ Y: motor stop mode

Bit	7	6	5	4

Bit	Function	Description
Bit 5, Bit 4	Dynamic brake operation options	Options for stopping the motor when the servo is in the Servo Off state or an alarm (including EMGS) occurs Bit 5 = 0 and Bit 4 = 0: use dynamic brake. Bit 5 = 0 and Bit 4 = 1: motor runs freely. Bit 5 = 1 and Bit 4 = 0: use dynamic brake first, and then let the motor run freely once the speed is slower than the value of P1.038.
Bit 6	Trigger stop command when main power error (AL022) occurs Note	0: disable this function 1: when P1.043 is a negative value and main power error (AL022) occurs, the servo drive commands the motor to decelerate to 0 in the Servo On state
Bit 7	Reserved	-

When DI.PL (CCWL) or DI.NL (CWL) is On, the deceleration time refers to the setting of P5.003. If the deceleration time is set to 1 ms, the motor stops instantly.

Note: this function is only available in Position and Speed (PT, PR, S, and Sz) modes and is effective only when P1.043 (Delay time for disabling the electromagnetic brake) is a negative value.

P1.033	Reserved

P1.034	S-curve acceleration constant		Address: 0144H 0145H
Default:	200	Control mode:	S / Sz
Unit:	ms	Setting range:	1 to 65500
Format:	DEC	Data size:	16-bit
Model:	E3C-L, E3C-L1		

Settings:

Sets the time for the Speed command to accelerate the motor from 0 to 3000 rpm. You can set P1.034, P1.035, and P1.036 individually. When an internal command is used, even if you set P1.036 to 0, the acceleration and deceleration still follow a trapezoidal curve; when an analog command is used, you must set P1.036 larger than 0 so that the acceleration and deceleration follow a trapezoidal curve.

Note: when an analog Speed command is used, the setting range is limited to 1 - 20000.

P1.035	S-curve deceleration constant		Address: 0146H 0147H
Default:	200	Control mode:	S / Sz
Unit:	ms	Setting range:	1 to 65500
Format:	DEC	Data size:	16-bit
Model:	E3C-L, E3C-L1		

Settings:

Sets the time for the Speed command to decelerate the motor from 3000 rpm to 0. You can set P1.034, P1.035, and P1.036 individually. When an internal command is used, even if you set P1.036 to 0, the acceleration and deceleration still follow a trapezoidal curve; when an analog command is used, you must set P1.036 larger than 0 so that the acceleration and deceleration follow a trapezoidal curve.

Note: when an analog Speed command is used, the setting range is limited to 1 - 20000.

P1.036	S-curve acceleration / deceleration smoothing constant		Address: 0148H 0149H
Default:	0	Control mode:	PR / S / Sz
Unit:	ms	Setting range:	0 to 65500
Format:	DEC	Data size:	16-bit
Model:	E3C-L, E3C-L1		

Settings:

0: disable this function

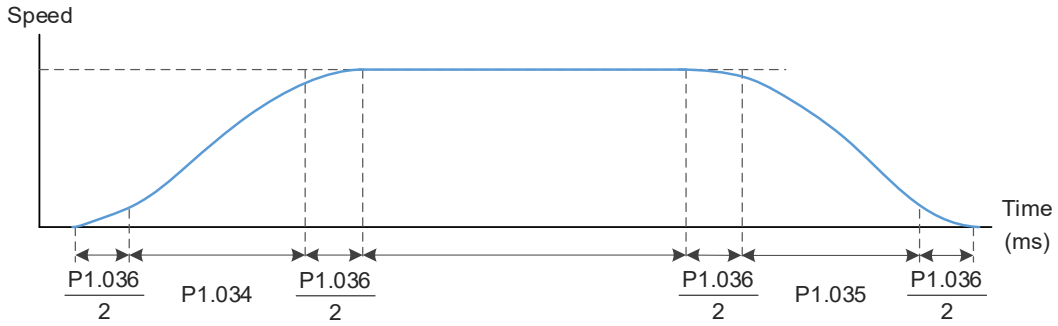

P1.034: sets the acceleration time for the trapezoidal curve.

P1.035: sets the deceleration time for the trapezoidal curve.

P1.036: sets the smoothing time for the S-curve acceleration and deceleration.

You can set P1.034, P1.035, and P1.036 individually. Even if you set P1.036 to 0, the acceleration and deceleration still follow a trapezoidal curve.

	P1.036 = 0	P1.036 = 1	P1.036 > 1
Smoothing function for S-curve	Disabled	Disabled	Enabled
Following error compensation function	Disabled	Enabled	Determined by P2.068.X

Note: when an analog Speed command is used, the setting range is limited to 1 - 10000.

P1.037	Load inertia ratio			Address: 014AH 014BH
Operation interface:	Panel / software	Communication	Control mode:	All
Default:	2.0	20	Data size:	16-bit
Unit:	1 times	0.1 times	-	-
Setting range:	0.0 to 200.0	0 to 2000	-	-
Format:	One decimal	DEC	-	-
Model:	E3C-L, E3C-L1			

Settings:

Load inertia ratio: (J_load / J_motor) of the rotary motor.

J_motor: rotational inertia of the servo motor

J_load: total equivalent inertia of external mechanical load

P1.038	Zero speed detection level			Address: 014CH 014DH
Operation interface:	Panel / software	Communication	Control mode:	All
Default:	10.0	100	Data size:	16-bit
Unit:	1 rpm	0.1 rpm	-	-
Setting range:	0.0 to 200.0	0 to 2000	-	-
Format:	One decimal	DEC	-	-
Model:	E3C-L, E3C-L1			

Settings:

When the absolute value of the motor speed is lower than this value, the condition for triggering the zero-speed signal is met and DO.ZSPD is On.

P1.039	Target speed detection level		Address: 014EH 014FH
Default:	3000	Control mode:	All
Unit:	rpm	Setting range:	0 to 5000
Format:	DEC	Data size:	16-bit
Model:	E3C-L, E3C-L1		

Settings:

Sets the motor target speed. When the absolute value of the motor speed is higher than this value, the condition for triggering the target speed reached signal is met and DO.TSPD is On.

P1.040	Maximum motor speed for analog Speed command 1		Address: 0150H 0151H
Default:	Rated speed	Control mode:	S / T
Unit:	rpm	Setting range:	0 to 50000
Format:	DEC	Data size:	32-bit
Model:	E3C-L, E3C-L1		

Settings:

In Speed mode:

Sets the motor speed corresponding to 10V (maximum voltage) for the analog Speed command.

$$\text{Speed control command} = \frac{\text{Input voltage} \times \text{P1.040}}{10}$$

In Torque mode:

Sets the motor speed limit corresponding to 10V (maximum voltage) for the analog speed limit.

$$\text{Speed limit command} = \frac{\text{Input voltage} \times \text{P1.040}}{10}$$

Example:

If P1.040 = 2000 and the external voltage input is 5V, then the speed control / speed limit command = $\frac{5\text{V} \times 2000\ \text{rpm}}{10}$ = 1000 rpm.

P1.041▲	Maximum output for analog Torque command		Address: 0152H 0153H
Default:	100	Control mode:	All
Unit:	%	Setting range:	0 to 1000
Format:	DEC	Data size:	16-bit
Model:	E3C-L, E3C-L1		

Settings:

In Torque mode:

Sets the torque corresponding to 10V (maximum voltage) for the analog Torque command.

$$\text{Torque control command} = \frac{\text{Input voltage} \times \text{P1.041}}{10} \text{ (Unit: \%)}$$

In Speed, PT, and PR modes:

Sets the torque limit corresponding to 10V (maximum voltage) for the analog torque limit.

$$\text{Torque limit command} = \frac{\text{Input voltage} \times \text{P1.041}}{10} \text{ (Unit: \%)}$$

Example:

If P1.041 = 10, when the external analog voltage input is 10V, the torque control / torque limit command = $\frac{10V \times 10}{10}$ = 10%.

P1.042	Delay time for enabling the electromagnetic brake		Address: 0154H 0155H
Default:	0	Control mode:	All
Unit:	ms	Setting range:	0 to 1000
Format:	DEC	Data size:	16-bit
Model:	E3C-L, E3C-L1		

Settings:

Sets the delay time from the Servo On state to the activation of the electromagnetic brake signal (DO.BRKR: 0x08).

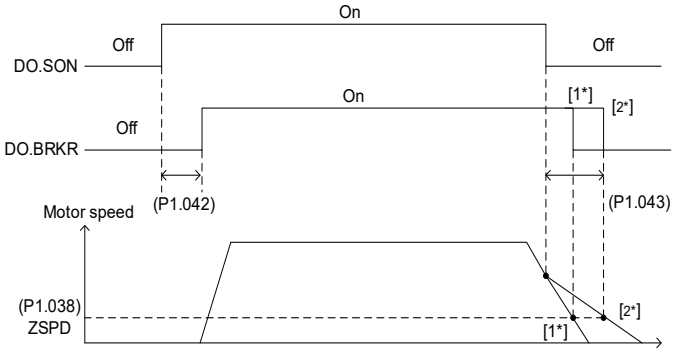

Note:
1. If the delay time specified in P1.042 has not passed yet and the motor speed is slower than the value of P1.038, the electromagnetic brake signal (DO.BRKR) is disabled.
2. If the delay time specified in P1.042 has passed and the motor speed is faster than the value of P1.038, the electromagnetic brake signal (DO.BRKR) is disabled.

P1.043	Delay time for disabling the electromagnetic brake		Address: 0156H 0157H
Default:	0	Control mode:	All
Unit:	ms	Setting range:	-1000 to +1000
Format:	DEC	Data size:	16-bit
Model:	E3C-L, E3C-L1		

Settings:

Sets the delay time from the Servo Off state to the deactivation of the electromagnetic brake signal (DO.BRKR: 0x08). Refer to P1.042 for the detailed diagram.

Note: if P1.043 is a negative value and the servo is Off due to an alarm (except for AL022) or emergency stop, the setting of P1.043 is invalid. This is equivalent to setting the delay time to 0.

P1.044▲	E-Gear ratio - numerator N1		Address: 0158H 0159H
Default:	16777216	Control mode:	All
Unit:	pulse	Setting range:	1 to (2^{29}-1)
Format:	DEC	Data size:	32-bit
Model:	E3C-L, E3C-L1		

Settings:

For the E-Gear ratio setting, refer to Section 6.2.5. For multiple E-Gear ratio (numerator) settings, refer to P2.060 - P2.062.

Note: do not change the setting in the Servo On state.

P1.045▲	E-Gear ratio - denominator M		Address: 015AH 015BH
Default:	100000	Control mode:	All
Unit:	pulse	Setting range:	1 to (2^{31}-1)
Format:	DEC	Data size:	32-bit
Model:	E3C-L, E3C-L1		

Settings:

If the setting is incorrect, the servo motor is prone to sudden unintended acceleration. Follow these instructions.

E-Gear ratio setting: $f2 = f1 \times \frac{N}{M}$

Pulse of User Unit (PUU) (f1) → $\frac{N}{M}$ → Resolution determined by servo drive (pulse) (f2)

Range of E-gear ratio: $1 \le Nx / M \le 262144$.

For the E-Gear ratio setting, refer to Section 6.2.5.

Note: do not change the setting in the Servo On state.

P1.046▲	Encoder pulse number output (OA, OB)		Address: 015CH 015DH
Default:	2500	Control mode:	All
Unit:	pulse	Setting range:	4 to 40000
Format:	DEC	Data size:	32-bit
Model:	E3C-L, E3C-L1		

Settings:

When P2.066 [Bit 15] = 0, the setting of P1.046 is the output single-phase pulses per motor revolution.

When P2.066 [Bit 15] = 1, the setting of P1.046 is the output pulses with quadruple frequency per motor revolution.

Refer to P2.066 for details. The maximum output frequency of the hardware is 19.8 MHz.

Note:
In the following circumstances, pulse output of the encoder may exceed the maximum allowable output pulse frequency of the drive, causing AL018:
1. Encoder error.
2. The motor speed is faster than the setting of P1.076.
3. Motor speed (rpm) / 60 x P1.046 x 4 > 19.8 x 10^6

P1.047	Speed reached (DO.SP_OK) range		Address: 015EH 015FH
Default:	10	Control mode:	S / Sz
Unit:	rpm	Setting range:	0 to 300
Format:	DEC	Data size:	16-bit
Model:	E3C-L, E3C-L1		

Settings:

In Speed modes, when the absolute value of the difference between the Speed command and the motor speed feedback is less than the range set in P1.047 and this status is kept for the time duration set in P1.049, then DO.SP_OK (0x19) is On. When the difference exceeds the range set in P1.047, the system recalculates the duration.

Diagram:

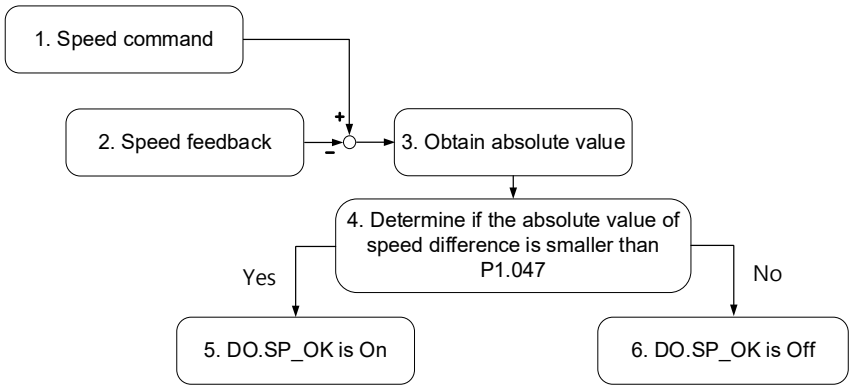

1. Speed command: the command that you input without acceleration or deceleration, rather than the command from the front end speed circuit. Its source is the register.
2. Speed feedback: the actual speed of the motor which has been filtered.
3. Obtain the absolute value.
4. Determine whether the absolute value of the speed difference is smaller than the setting of P1.047. If you set P1.047 = 0, then DO.SP_OK is always Off.

P1.048	Motion reached (DO.MC_OK) operation option		Address: 0160H 0161H
Default:	0x0000	Control mode:	PR
Unit:	-	Setting range:	0x0000 to 0x0011
Format:	HEX	Data size:	16-bit
Model:	E3C-L, E3C-L1		

8

Settings:

Options for controlling the behavior of DO.MC_OK (0x17).



X	DO output retaining option	Z	Reserved
Y	Position offset alarm (AL380) option	U	Reserved

- X: DO output retaining option

  0: output status is not retained

  1: output status is retained

- Y: position offset alarm (AL380) option

  0: AL380 not functioning

  1: AL380 functioning

Diagram:

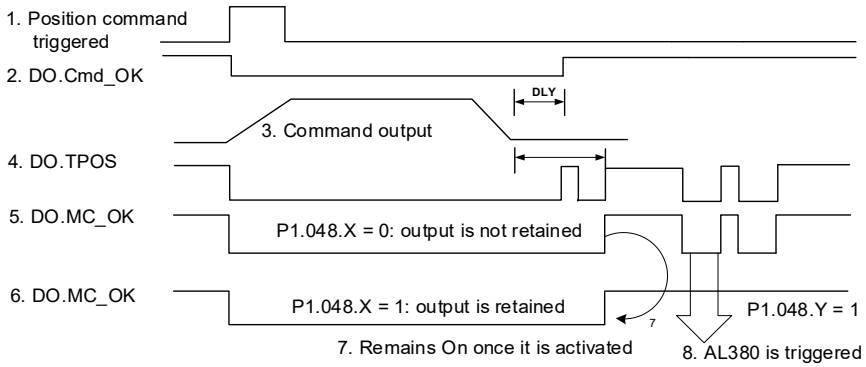

Description:

1. Position command triggered: new PR Position command is effective. Command 3 starts and signals 2, 4, 5, and 6 are cleared simultaneously. Command triggering source: DI.CTRG, DI.EV1/EV2, and P5.007 (triggered through software).
2. DO.Cmd_OK: indicates whether command 3 is complete, and can be set with a delay time (DLY) with parameters.
3. Command output: output the profile of the Position command based on the setting for acceleration or deceleration.
4. DO.TPOS: position error of the servo drive is within the range set in P1.054.
5. DO.MC_OK: Position command output and servo positioning completed, which indicates that both DO.Cmd_OK and DO.TPOS are On.
6. DO.MC_OK (retains digital output status): same as 5, except that once this DO is On, its status is retained regardless of the signal 4 status.

7. Either event 5 or 6 can occur, and this is determined by P1.048.X.
8. Position offset: when event 7 occurs, if signal 4 or 5 is Off, it means there is a position offset and AL380 can be triggered. Set whether AL380 is functioning with P1.048.Y.

P1.049	Accumulated time to reach desired speed		Address: 0162H 0163H
Default:	0	Control mode:	S / Sz
Unit:	ms	Setting range:	0 to 65535
Format:	DEC	Data size:	16-bit
Model:	E3C-L, E3C-L1		

Settings:

In Speed modes, when the absolute value of the difference between the Speed command and the motor speed feedback is less than the range set in P1.047 and this status is kept for the time duration set in P1.049, then DO.SP_OK (0x19) is On. When the difference exceeds the range set in P1.047, the system recalculates the duration.

P1.050 - P1.051	Reserved

P1.052	Regenerative resistor value		Address: 0168H 0169H
Default:	Refer to the following tables.	Control mode:	All
Unit:	ohm	Setting range:	Refer to the following tables.
Format:	DEC	Data size:	16-bit
Model:	E3C-L, E3C-L1		

Settings:

E3C-L1 models		Default (Ω)	Setting range (Ω)
220V	400 W	100	60 to 750

E3C-L models		Default (Ω)	Setting range (Ω)
220V	750 W and below	100	60 to 750
	1 kW - 1.5 kW	100	30 to 750
400V	1 kW	100	80 to 750
	1.5 kW	100	60 to 750
	2 kW	50	45 to 750
	3 kW	50	40 to 750

Refer to the description of P1.053 for the parameter values when connecting the regenerative resistor with different methods.

P1.053	Regenerative resistor capacity		Address: 016AH 016BH
Default:	Refer to the following tables.	Control mode:	All
Unit:	Watt	Setting range:	0 to 15000
Format:	DEC	Data size:	16-bit
Model:	E3C-L, E3C-L1		

8

Settings:

E3C-L1 models		Default (Watt)
220V	400 W	36

E3C-L models		Default (Watt)
220V	400 W	0
	750 W	36
	1 kW - 1.5 kW	40
400V	1 kW - 3 kW	80

Setting the parameter values when connecting the regenerative resistor with different methods:

External regenerative resistor (single)	External regenerative resistor (in series)	External regenerative resistor (in parallel)
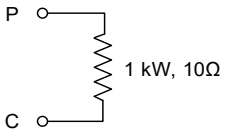	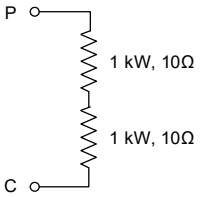	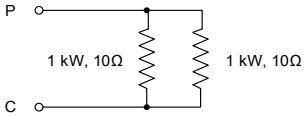
P1.052 = 10 (Ω) P1.053 = 1000 (W)	P1.052 = 20 (Ω) P1.053 = 2000 (W)	P1.052 = 5 (Ω) P1.053 = 2000 (W)

P1.054	Pulse range for position reached		Address: 016CH 016DH
Default:	167772	Control mode:	PT / PR
Unit:	pulse	Setting range:	0 to 16777216
Format:	DEC	Data size:	32-bit
Model:	E3C-L, E3C-L1		

Settings:

In PT mode, when the pulse number error is smaller than the range set by P1.054, the condition for triggering the target position reached signal is met and DO.TPOS is On.

In PR mode, when the difference between the target position and the actual motor position is less than the range set by P1.054, the condition for triggering the target position reached signal is met and DO.TPOS is On.

Example:

Take the rotary motor for example. If P1.054 = 167772 and the error is less than 167772 pulses, which equals 0.01 turns (167772 / 16777216 = 0.01), then DO.TPOS is On.

P1.055	Maximum speed limit		Address: 016EH 016FH
Default:	Rated speed	Control mode:	All
Unit:	rpm	Setting range:	0 to maximum speed
Format:	DEC	Data size:	16-bit
Model:	E3C-L, E3C-L1		

Settings:

Sets the maximum operating speed of the servo motor.

P1.056	Motor output overload warning level		Address: 0170H 0171H
Default:	120	Control mode:	All
Unit:	%	Setting range:	0 to 120
Format:	DEC	Data size:	16-bit
Model:	E3C-L, E3C-L1		

Settings:

When the value is 0 - 100 and the servo motor continuously outputs load that is higher than the setting of P1.056, the pre-warning signal for overload (DO.OLW: 0x10) is On. When the value is over 100, the pre-warning function is disabled.

P1.057	Motor hard stop 1 - torque percentage		Address: 0172H 0173H
Default:	0	Control mode:	All
Unit:	%	Setting range:	0 to 300
Format:	DEC	Data size:	16-bit
Model:	E3C-L, E3C-L1		

Settings:

Sets the protection level which is the percentage of rated torque. Setting P1.057 = 0 disables the function; setting P1.057 = 1 or above enables the function.

When there is no external force, P1.057 = (motor current in percentage when the motor runs at constant speed in forward direction + motor current in percentage when the motor runs at constant speed in reverse direction) / 2 + protection torque value.

P1.058	Motor hard stop - protection time		Address: 0174H 0175H
Default:	1	Control mode:	All
Unit:	ms	Setting range:	1 to 1000
Format:	DEC	Data size:	16-bit
Model:	E3C-L, E3C-L1		

Settings:

Sets the protection time: when the motor torque reaches the protection level and the protection time is exceeded, AL030 occurs.

Note: this function is only suitable for non-contactable uses, such as electrical discharge machines (make sure P1.037 is correctly set).

P1.059	Speed command - moving filter			Address: 0176H 0177H
Operation interface:	Panel / software	Communication	Control mode:	S
Default:	0.0	0	Data size:	16-bit
Unit:	1 ms	0.1 ms	-	-
Format:	One decimal	DEC	-	-
Setting range:	0.0 to 4.0	0 to 40	-	-
Model:	E3C-L, E3C-L1			

Settings:

0: disable this function.

P1.006 is the low-pass filter and P1.059 is the moving filter. The difference between them is that the moving filter can smooth the beginning and end of the step command, while the low-pass filter can only smooth the command at the end.

Therefore, if the speed loop receives the command from the controller for the position control loop, then the low-pass filter is recommended. As for simple speed control, use the moving filter for better smoothing.

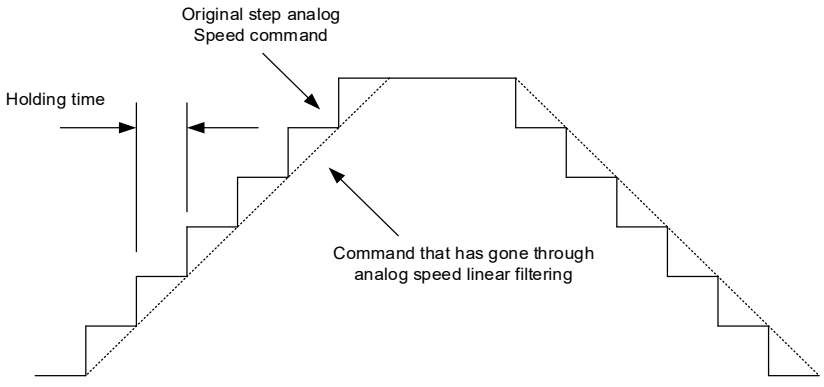

P1.060 - P1.061	Reserved

P1.062	Percentage of friction compensation		Address: 017CH 017DH
Default:	0	Control mode:	PT / PR / S / Sz
Unit:	%	Setting range:	0 to 100
Format:	DEC	Data size:	16-bit
Model:	E3C-L, E3C-L1		

Settings:

Sets the level of friction compensation, which is the percentage of the rated torque. Setting P1.062 = 0 disables the friction compensation function. Setting P1.062 = 1 or above enables the function for reducing the position error at the moment the motion starts.

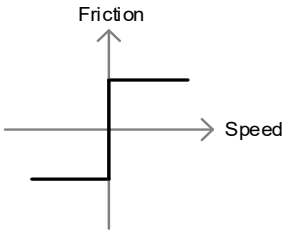

P1.062 Percentage of friction compensation

P1.063	Constant of friction compensation		Address: 017EH 017FH
Default:	1	Control mode:	PT / PR / S / Sz
Unit:	ms	Setting range:	1 to 1000
Format:	DEC	Data size:	16-bit
Model:	E3C-L, E3C-L1		

Settings:

Sets the speed for the friction compensation value to reach the setting value of P1.062.

P1.064 - P1.067	Reserved

P1.068	Position command - moving filter		Address: 0188H 0189H
Default:	4	Control mode:	PT / PR
Unit:	ms	Setting range:	0 to 100
Format:	DEC	Data size:	16-bit
Model:	E3C-L, E3C-L1		

Settings:

0: disable this function.

The moving filter smooths the beginning and end of the step command, but it also delays the command.

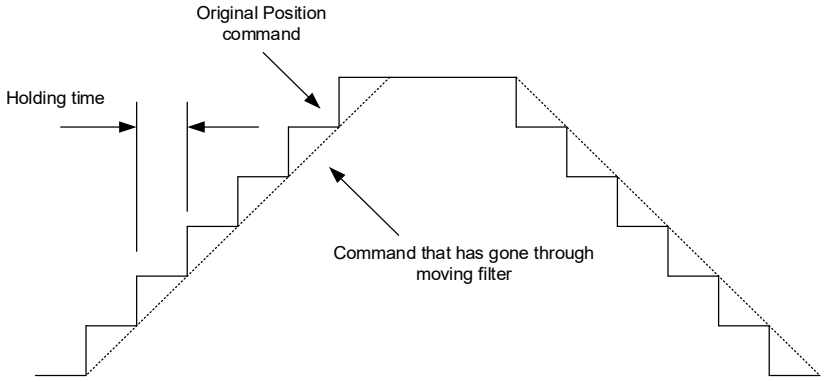

P1.069 - P1.075	Reserved

P1.076▲	Maximum speed for encoder output (OA, OB)		Address: 0198H 0199H
Default:	5500	Control mode:	All
Unit:	rpm	Setting range:	0 to 7500
Format:	DEC	Data size:	16-bit
Model:	E3C-L, E3C-L1		

Settings:

The reference value for the actual maximum motor speed command after filtering.

P1.077 - P1.080	Reserved

P1.081	Maximum motor speed for analog Speed command 2		Address: 01A2H 01A3H
Default:	Rated speed	Control mode:	S / T
Unit:	rpm	Setting range:	0 to 50000
Format:	DEC	Data size:	32-bit
Model:	E3C-L, E3C-L1		

Settings:

Refer to the description of P1.040.

P1.082	Reserved

P1.083	Abnormal analog input voltage level		Address: 01A6H 01A7H
Default:	0	Control mode:	S
Unit:	mV	Setting range:	0 to 12000 (0: disable this function)
Format:	DEC	Data size:	16-bit
Model:	E3C-L, E3C-L1		

Settings:

When the absolute value of the analog input voltage is higher than the P1.083 setting value for more than 50 ms, AL042 occurs. The comparison value for this parameter is the original analog input voltage which has not been changed by an offset value through P4.022 (Analog speed input - offset compensation value).

P1.084 - P1.086	Reserved

P1.087	Torque homing - torque level detection		Address: 01AEH 01AFH
Default:	1	Control mode:	PR
Unit:	%	Setting range:	1 to 300
Format:	DEC	Data size:	16-bit
Model:	E3C-L, E3C-L1		

Settings:

This setting is only for the torque homing mode. As shown in the following figure, after homing is triggered, the motor runs in one direction and the mechanical part reaches the protector. The servo drive then outputs a larger motor current in order to counter the external force. The servo drive uses P1.087 and P1.088 as the conditions for homing. Since the hard stops are not always the same, it is recommended that you have the servo reverse to find the Z pulse as the origin.

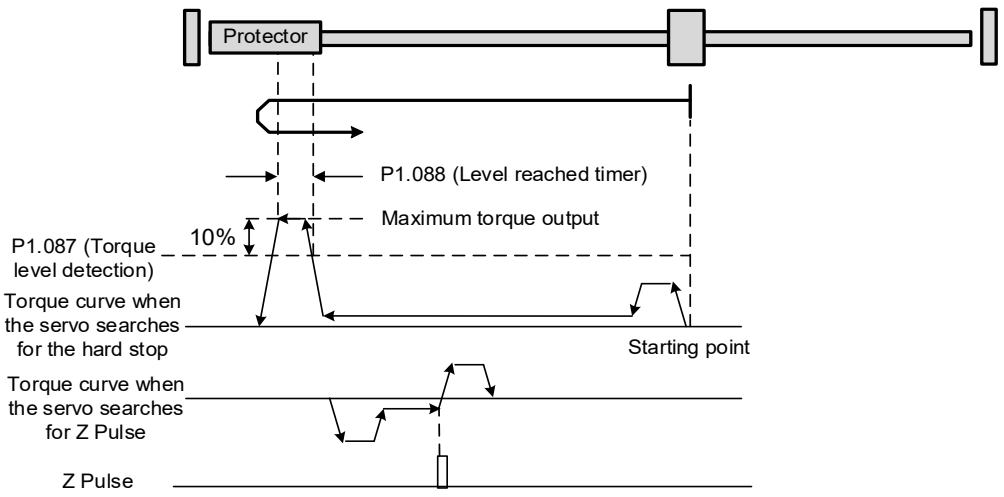

Important: the actual maximum torque output of the motor is 10% greater than the detected torque level (P1.087). For example, when you set P1.087 to 50%, the maximum torque output of the motor is 60%.

P1.088	Torque homing - level reached timer		Address: 01B0H 01B1H
Default:	2000	Control mode:	PR
Unit:	ms	Setting range:	2 to 2000
Format:	DEC	Data size:	16-bit
Model:	E3C-L, E3C-L1		

Settings:

The setting of the **torque level reached timer** for the torque homing mode. If the motor torque output continues to exceed the level set by P1.087 and the duration exceeds this setting, the homing is complete. Refer to P1.087 for the timing diagram of torque homing mode.

P1.089 - P1.097	Reserved

P1.098	Disconnection detection protection (UVW) response time		Address: 01C4H 01C5H
Default:	0	Control mode:	All
Unit:	ms	Setting range:	0, 100 to 800
Format:	DEC	Data size:	16-bit
Model:	E3C-L, E3C-L1		

Settings:

When the switch for motor power cable disconnection detection (ALC31) is enabled (P2.065 [Bit 9] = 1), set the detection response time with this parameter.

P1.098 = 0: use the servo's default response time.

P1.098 ≠ 0: the value should be between 100 and 800 for the detection response time.

Note:
1. If it is necessary to shorten the response time, it is recommended that you use this parameter.
2. When the servo is On and has not started running, it is recommended that you properly set this parameter if you need to detect disconnection.

P1.099 - P1.100	Reserved

P1.101■	Analog monitor output voltage 1		Address: 01CAH 01CBH
Default:	0	Control mode:	All
Unit:	mV	Setting range:	-10000 to +10000
Format:	DEC	Data size:	16-bit
Model:	E3C-L, E3C-L1		

Settings:

When you set P0.003 (Analog output monitoring) to 0x0006, then the analog monitor output voltage refers to the voltage value of P1.101.

Note: the valid setting range of P1.101 is -8V to +8V.

P1.102■	Analog monitor output voltage 2		Address: 01CCH 01CDH
Default:	0	Control mode:	All
Unit:	mV	Setting range:	-10000 to +10000
Format:	DEC	Data size:	16-bit
Model:	E3C-L, E3C-L1		

Settings:

When you set P0.003 (Analog output monitoring) to 0x0007, then the analog monitor output voltage refers to the voltage value of P1.102.

Note: the valid setting range of P1.102 is -8V to +8V.

P2.xxx Extension parameters

P2.000	Position proportional gain		Address: 0200H 0201H
Default:	35	Control mode:	PT / PR
Unit:	rad/s	Setting range:	0 to 2047
Format:	DEC	Data size:	16-bit
Model:	E3C-L, E3C-L1		

Settings:

Increasing the position proportional gain can enhance the position response and reduce the position errors. If you set the value too high, it may cause vibration and noise.

P2.001	Rate of change for position proportional gain		Address: 0202H 0203H
Default:	100	Control mode:	PT / PR
Unit:	%	Setting range:	10 to 500
Format:	DEC	Data size:	16-bit
Model:	E3C-L, E3C-L1		

Settings:

Adjust the rate of change for P2.000 (Position proportional gain) according to P2.027.X (Gain switching condition).

P2.002	Position feed forward gain		Address: 0204H 0205H
Default:	50	Control mode:	PT / PR
Unit:	%	Setting range:	0 to 100
Format:	DEC	Data size:	16-bit
Model:	E3C-L, E3C-L1		

Settings:

If the position control command changes smoothly, increasing the gain value can reduce the position following errors. If the position control command does not change smoothly, decreasing the gain value can reduce the mechanical vibration.

P2.003	Position feed forward gain smoothing constant		Address: 0206H 0207H
Default:	5	Control mode:	PT / PR
Unit:	ms	Setting range:	2 to 100
Format:	DEC	Data size:	16-bit
Model:	E3C-L, E3C-L1		

Settings:

If the position control command changes smoothly, decreasing the smoothing constant value can reduce the position following errors. If the position control command does not change smoothly, increasing the smoothing constant value can reduce the mechanical vibration.

P2.004	Speed proportional gain		Address: 0208H 0209H
Default:	500	Control mode:	All
Unit:	rad/s	Setting range:	0 to 8191
Format:	DEC	Data size:	16-bit
Model:	E3C-L, E3C-L1		

Settings:

Increasing the speed proportional gain can enhance the speed response. If you set the value too high, it may cause vibration and noise.

P2.005	Rate of change for speed proportional gain		Address: 020AH 020BH
Default:	100	Control mode:	All
Unit:	%	Setting range:	10 to 500
Format:	DEC	Data size:	16-bit
Model:	E3C-L, E3C-L1		

Settings:

Adjust the rate of change for P2.004 (Speed proportional gain) according to P2.027.X (Gain switching condition).

P2.006	Speed integral compensation		Address: 020CH 020DH
Default:	100	Control mode:	All
Unit:	rad/s	Setting range:	0 to 1023
Format:	DEC	Data size:	16-bit
Model:	E3C-L, E3C-L1		

Settings:

Increasing the value of the integral speed control can enhance the speed response and reduce the error in speed control. If you set the value too high, it may cause vibration and noise.

P2.007	Speed feed forward gain		Address: 020EH 020FH
Default:	0	Control mode:	All
Unit:	%	Setting range:	0 to 100
Format:	DEC	Data size:	16-bit
Model:	E3C-L, E3C-L1		

Settings:

If the speed control command changes smoothly, increasing the gain value can reduce the speed following errors. If the speed control command does not change smoothly, decreasing the gain value can reduce the mechanical vibration.

P2.008■	Special parameter write-in function		Address: 0210H 0211H
Default:	0	Control mode:	All
Unit:	-	Setting range:	0 to 501
Format:	DEC	Data size:	16-bit
Model:	E3C-L, E3C-L1		

Settings:

Setting value	Function
10	Reset parameter groups P0 - P7 (cycle the power after reset).
20	P4.010 is writable.
22	P4.011 - P4.021 are writable.
30, 35	Save the data array.
271	First set P2.069.X to 1 and cycle power on the servo drive to enable the absolute function. Then, set P2.008 to 271 and P2.071 to 0x0001 to establish the absolute origin.
400	When forced DO mode is enabled, switch back to the normal DO mode.
406	Enable forced DO mode.

P2.009	DI response filter time		Address: 0212H 0213H
Default:	2	Control mode:	All
Unit:	ms	Setting range:	0 to 20
Format:	DEC	Data size:	16-bit
Model:	E3C-L, E3C-L1		

Settings:

When environmental interference is high, increasing this value can enhance the control stability. If you set the value too high, it affects the response time.

P2.010	DI1 functional planning		Address: 0214H 0215H
Default:	0x0101	Control mode:	All
Unit:	-	Setting range:	0x0000 to 0x015F (last two codes are DI codes)
Format:	HEX	Data size:	16-bit
Model:	E3C-L, E3C-L1		

Settings:



YX	Input function selection	Z	Input contact: A or B contact
-	-	U	Reserved

- YX: input function selection

  Refer to Table 8.1.

- Z: input contact: A or B contact

  0: set this input contact to be normally closed (B contact)

  1: set this input contact to be normally open (A contact)

After the parameter is modified, cycle power on the servo drive to ensure the DI functions normally. Use P3.006 to change the source for the digital input signal, which can be either an external terminal block or the parameter P4.007.

P2.011	DI2 functional planning		Address: 0216H 0217H
Default:	0x0104	Control mode:	All
Unit:	-	Setting range:	0x0000 to 0x015F (last two codes are DI codes)
Format:	HEX	Data size:	16-bit
Model:	E3C-L, E3C-L1		

Settings:

Refer to the description of P2.010.

P2.012	DI3 functional planning		Address: 0218H 0219H
Default:	0x0116	Control mode:	All
Unit:	-	Setting range:	0x0000 to 0x015F (last two codes are DI codes)
Format:	HEX	Data size:	16-bit
Model:	E3C-L, E3C-L1		

Settings:

Refer to the description of P2.010.

P2.013	DI4 functional planning		Address: 021AH 021BH
Default:	0x0117	Control mode:	All
Unit:	-	Setting range:	0x0000 to 0x015F (last two codes are DI codes)
Format:	HEX	Data size:	16-bit
Model:	E3C-L, E3C-L1		

Settings:

Refer to the description of P2.010.

P2.014	DI5 functional planning		Address: 021CH 021DH
Default:	0x0102	Control mode:	All
Unit:	-	Setting range:	0x0000 to 0x015F (last two codes are DI codes)
Format:	HEX	Data size:	16-bit
Model:	E3C-L, E3C-L1		

Settings:

Refer to the description of P2.010.

P2.015	DI6 functional planning		Address: 021EH 021FH
Default:	0x0022	Control mode:	All
Unit:	-	Setting range:	0x0000 to 0x015F (last two codes are DI codes)
Format:	HEX	Data size:	16-bit
Model:	E3C-L, E3C-L1		

Settings:

Refer to the description of P2.010.

P2.016	DI7 functional planning		Address: 0220H 0221H
Default:	0x0023	Control mode:	All
Unit:	-	Setting range:	0x0000 to 0x015F (last two codes are DI codes)
Format:	HEX	Data size:	16-bit
Model:	E3C-L, E3C-L1		

Settings:

Refer to the description of P2.010.

P2.017	DI8 functional planning		Address: 0222H 0223H
Default:	0x0021	Control mode:	All
Unit:	-	Setting range:	0x0000 to 0x015F (last two codes are DI codes)
Format:	HEX	Data size:	16-bit
Model:	E3C-L, E3C-L1		

Settings:

Refer to the description of P2.010.

P2.018	DO1 functional planning		Address: 0224H 0225H
Default:	0x0101	Control mode:	All
Unit:	-	Setting range:	0x0000 to 0x013F (last two codes are DO codes)
Format:	HEX	Data size:	16-bit
Model:	E3C-L, E3C-L1		

Settings:



YX	Output function selection	Z	Output contact: A or B contact
-	-	U	Reserved

- YX: output function selection

  Refer to Table 8.2.

- Z: output contact: A or B contact

  0: set this output contact to be normally closed (B contact).

  1: set this output contact to be normally open (A contact).

After the parameter is modified, cycle power on the servo drive to ensure the DO functions normally.

P2.019	DO2 functional planning		Address: 0226H 0227H
Default:	0x0103	Control mode:	All
Unit:	-	Setting range:	0x0000 to 0x013F (last two codes are DO codes)
Format:	HEX	Data size:	16-bit
Model:	E3C-L, E3C-L1		

Settings:

Refer to the description of P2.018.

P2.020	DO3 functional planning		Address: 0228H 0229H
Default:	0x0109	Control mode:	All
Unit:	-	Setting range:	0x0000 to 0x013F (last two codes are DO codes)
Format:	HEX	Data size:	16-bit
Model:	E3C-L, E3C-L1		

Settings:

Refer to the description of P2.018.

P2.021	DO4 functional planning		Address: 022AH 022BH
Default:	0x0105	Control mode:	All
Unit:	-	Setting range:	0x0000 to 0x013F (last two codes are DO codes)
Format:	HEX	Data size:	16-bit
Model:	E3C-L, E3C-L1		

Settings:

Refer to the description of P2.018.

P2.022	DO5 functional planning		Address: 022CH 022DH
Default:	0x0007	Control mode:	All
Unit:	-	Setting range:	0x0000 to 0x013F (last two codes are DO codes)
Format:	HEX	Data size:	16-bit
Model:	E3C-L, E3C-L1		

Settings:

Refer to the description of P2.018.

P2.023	Notch filter 1 - frequency		Address: 022EH 022FH
Default:	1000	Control mode:	All
Unit:	Hz	Setting range:	50 to 1000
Format:	DEC	Data size:	16-bit
Model:	E3C-L, E3C-L1		

Settings:

The resonance frequency of the first Notch filter. This function is disabled if P2.024 is 0.

P2.024	Notch filter 1 - attenuation level		Address: 0230H 0231H
Default:	0	Control mode:	All
Unit:	-dB	Setting range:	0 to 32
Format:	DEC	Data size:	16-bit
Model:	E3C-L, E3C-L1		

Settings:

The attenuation level of the first Notch filter. For example, a value of 5 indicates -5 dB. Set this parameter to 0 to disable the first Notch filter.

P2.025	Resonance suppression low-pass filter			Address: 0232H 0233H
Operation interface:	Panel / software	Communication	Control mode:	All
Default:	1.0	10	Data size:	16-bit
Unit:	1 ms	0.1 ms	-	-
Setting range:	0.0 to 100.0	0 to 1000	-	-
Format:	One decimal	DEC	-	-
Model:	E3C-L, E3C-L1			

Settings:

Sets the time constant for the resonance suppression low-pass filter. Set this parameter to 0 to disable the low-pass filter.

P2.026	Anti-interference gain		Address: 0234H 0235H
Default:	0	Control mode:	All
Unit:	rad/s	Setting range:	0 to 1023
Format:	DEC	Data size:	16-bit
Model:	E3C-L, E3C-L1		

Settings:

Increasing this parameter can increase the damping of the speed loop and reduce the speed loop response. Setting P2.026 to the same value of P2.006 is recommended. See the following for setting P2.026:

1. In Speed modes, increase the value of this parameter to reduce speed overshoot.
2. In Position modes, decrease the value of this parameter to reduce position overshoot.

P2.027	Gain switching condition and method selection		Address: 0236H 0237H
Default:	0x0000	Control mode:	Refer to X: gain switching condition
Unit:	-	Setting range:	0x0000 to 0x0018
Format:	HEX	Data size:	16-bit
Model:	E3C-L, E3C-L1		

Settings:



X	Gain switching condition	Z	Reserved
Y	Gain switching method	U	Reserved

■ X: gain switching condition

X value	Condition	Control mode
0	Disable gain switching function.	-
1	Signal of gain switching (DI.GAINUP: 0x03) is On.	All
2	In Position modes, position error (P0.002 = 33) is larger than P2.029.	P
3	Position command frequency (P0.002 = 6) is larger than P2.029.	P
4	Motor speed (P0.002 = 51) is faster than P2.029.	All
5	Signal of gain switching (DI.GAINUP: 0x03) is Off.	All
6	In Position modes, position error (P0.002 = 33) is smaller than P2.029.	P
7	Position command frequency (P0.002 = 6) is smaller than P2.029.	P
8	Motor speed (P0.002 = 51) is slower than P2.029.	All

■ Y: gain switching method

0: gain rate switching

1: integrator switching (switch from P controller to PI controller)

Y value	Position modes	Speed modes	Gain switching
0	P2.000 x 100% P2.004 x 100%	P2.004 x 100%	Before switching
	P2.000 x P2.001 P2.004 x P2.005	P2.004 x P2.005	After switching
1	P2.006 x 0% P2.026 x 0%		Before switching
	P2.006 x 100% P2.026 x 100%		After switching

P2.028	Gain switching time constant		Address: 0238H 0239H
Default:	10	Control mode:	Refer to P2.027.X (Gain switching condition)
Unit:	ms	Setting range:	0 to 1000
Format:	DEC	Data size:	16-bit
Model:	E3C-L, E3C-L1		

Settings:

Smoothes the speed of gain switching (P2.027). Set this parameter to 0 to disable this function.

P2.029	Gain switching condition		Address: 023AH 023BH
Default:	16777216	Control mode:	Refer to P2.027.X (Gain switching condition)
Unit:	pulse; Kpps; rpm	Setting range:	0 to 50331648
Format:	DEC	Data size:	32-bit
Model:	E3C-L, E3C-L1		

Settings:

The unit of this parameter is determined by the selection of gain switching condition (P2.027.X).

P2.030■	Auxiliary function		Address: 023CH 023DH
Default:	0	Control mode:	All
Unit:	-	Setting range:	-8 to +8
Format:	DEC	Data size:	16-bit
Model:	E3C-L, E3C-L1		

Settings:

Setting value	Function
0	Disable all functions described as follows.
1	Switch servo to the Servo On state.
5	This setting makes all parameter settings volatile. When there is no need to permanently save the data continually written through the panel or communication, this setting can avoid shortening the lifetime of the EEPROM from continuous writing. You must use this function when using communication control.
6	This setting enables command simulation mode. In this mode, use the **Digital IO** function in ASDA-Soft to switch the servo to the Servo On state as both the external Servo On signal and the force Servo On of the PR mode in ASDA-Soft cannot work, the error code of the servo drive (monitoring variable 0x6F) is read as 0, and P0.001 only shows part of the error codes (such as positive / negative limit, emergency stop). When DO.SRDY is On, commands are accepted in each mode. You can use the **Scope** function in ASDA-Soft to observe these commands to examine their accuracy, but the motor does not operate.
8	Back up all current parameter values to EEPROM, so that the values are retained after power cycling. The panel displays “to.rom” during execution. This function can also be executed when servo is in the Servo On state.
-1, -5, -6	Respectively disable the functions of setting values 1, 5, and 6.
2 to 4, 7, -2 to -4, -7, -8	Reserved.

Note: set this parameter to 0 during normal operation. The value returns to 0 automatically after power cycling of the servo drive.

P2.031	Bandwidth for speed loop response in Auto mode and Semi-auto mode		Address: 023EH 023FH
Default:	40	Control mode:	All
Unit:	Hz	Setting range:	1 to 1000
Format:	DEC	Data size:	16-bit
Model:	E3C-L, E3C-L1		

8

Settings:

The servo drive automatically sets the position loop response according to the speed loop setting in P2.031. This function is enabled by P2.032. For details, refer to the tuning flowcharts in Chapter 5.

Setting value (Hz)	Stiffness and response
1 to 50	Low stiffness and low response
51 to 250	Medium stiffness and medium response
251 to 850	High stiffness and high response
851 to 1000	Ultra-high stiffness and ultra-high response

P2.032	Gain adjustment mode		Address: 0240H 0241H
Default:	0x0000	Control mode:	All
Unit:	-	Setting range:	0x0000 to 0x0002
Format:	HEX	Data size:	16-bit
Model:	E3C-L, E3C-L1		

Settings:

The gain adjustment mode and description corresponding to each setting value are as follows.

Proportional gain parameters: P2.000, P2.004, P2.006, P2.025, P2.026, and P2.049.

Setting value	Gain adjustment mode	Description
0x0000	Manual	Manually set the proportional gain parameters. ■ When the mode is switched from Auto or Semi-auto to Manual (P2.032 = 0x0001 → 0x0000 or 0x0002 → 0x0000), the system automatically saves the proportional gain parameter settings at present.
0x0001	Auto (continuous adjustment)	The servo drive continuously estimates the system inertia and updates the load inertia ratio to P1.037 every 30 minutes, and then adjusts the proportional gain parameters according to the P2.031 setting value. ■ When the mode is switched from Manual to Auto (P2.032 = 0x0000 → 0x0001), properly set P1.037 (Load inertia ratio). ■ When the mode is switched from Auto to Manual (P2.032 = 0x0001 → 0x0000), the system saves the estimated load inertia ratio to P1.037, and then automatically saves the proportional gain parameter settings at present.
0x0002	Semi-auto (non-continuous adjustment)	When the range of system inertia exceeds the allowable value, P2.033 displays 0x0000, indicating that the inertia estimation has restarted. After the system inertia becomes stable, P2.033 displays 0x0001, indicating that the inertia estimation has stopped. Then, the system saves the estimated load inertia ratio to P1.037. ■ When the mode is switched from Manual to Semi-auto (P2.032 = 0x0000 → 0x0002), properly set P1.037 (Load inertia ratio). ■ When the mode is switched from Manual or Auto to Semi-auto (P2.032 = 0x0000 → 0x0002 or 0x0001 → 0x0002), the servo drive restarts the inertia estimation, and then adjusts the proportional gain parameters according to the P2.031 setting value. ■ When the mode is switched from Semi-auto to Manual (P2.032 = 0x0002 → 0x0000), the system saves the estimated load inertia ratio to P1.037, and then automatically saves the proportional gain parameter settings at present.

P2.033	Inertia adjustment status in Semi-auto mode		Address: 0242H 0243H
Default:	0x0000	Control mode:	All
Unit:	-	Setting range:	0x0000 to 0x0001
Format:	HEX	Data size:	16-bit
Model:	E3C-L, E3C-L1		

Settings:

0x0000: inertia adjustment in Semi-auto mode is not yet complete and is still in progress.

0x0001: inertia estimation in Semi-auto mode is complete, and you can read P1.037 to get the load inertia ratio.

P2.034	Excessive error warning condition of Speed command		Address: 0244H 0245H
Default:	5000	Control mode:	S / Sz
Unit:	rpm	Setting range:	1 to 7500
Format:	DEC	Data size:	16-bit
Model:	E3C-L, E3C-L1		

Settings:

In Speed modes, this parameter sets the allowable difference between the command speed and the speed feedback. If the difference is greater than this value, AL007 occurs.

Note: when P2.094 [Bit 6] = 1, this parameter is available in both Position modes (PT, PR) and Speed modes (S, Sz).

P2.035	Excessive error warning condition of Position command		Address: 0246H 0247H
Default:	50331648	Control mode:	PT / PR
Unit:	pulse	Setting range:	1 to 1677721600
Format:	DEC	Data size:	32-bit
Model:	E3C-L, E3C-L1		

Settings:

In Position modes, this parameter sets the allowable difference between the command position and the position feedback. If the difference is greater than this value, AL009 occurs.

P2.036	DI9 functional planning		Address: 0248H 0249H
Default:	0x0100	Control mode:	All
Unit:	-	Setting range:	0x0000 to 0x015F (last two codes are DI codes)
Format:	HEX	Data size:	16-bit
Model:	E3C-L, E3C-L1		

Settings:

Refer to the description of P2.010.

P2.037	DI10 functional planning		Address: 024AH 024BH
Default:	0x0100	Control mode:	All
Unit:	-	Setting range:	0x0000 to 0x015F (last two codes are DI codes)
Format:	HEX	Data size:	16-bit
Model:	E3C-L, E3C-L1		

Settings:

Refer to the description of P2.010. If there is no physical pin for DI10 on the model, this parameter can be a virtual digital input to be triggered through communication or to be used when the number of physical DI points is insufficient. You can set the DI to be used as soon as the servo power is On (e.g., Servo On) to be a virtual DI and normally closed.

P2.038	DI11 functional planning		Address: 024CH 024DH
Default:	0x0100	Control mode:	All
Unit:	-	Setting range:	0x0000 to 0x015F (last two codes are DI codes)
Format:	HEX	Data size:	16-bit
Model:	E3C-L, E3C-L1		

Settings:

Refer to the description of P2.010. If there is no physical pin for DI11 on the model, this parameter can be a virtual digital input to be triggered through communication or to be used when the number of physical DI points is insufficient. You can set the DI to be used as soon as the servo power is On (e.g., Servo On) to be a virtual DI and normally closed.

P2.039	DI12 functional planning		Address: 024EH 024FH
Default:	0x0100	Control mode:	All
Unit:	-	Setting range:	0x0000 to 0x015F (last two codes are DI codes)
Format:	HEX	Data size:	16-bit
Model:	E3C-L, E3C-L1		

Settings:

Refer to the description of P2.010. If there is no physical pin for DI12 on the model, this parameter can be a virtual digital input to be triggered through communication or to be used when the number of physical DI points is insufficient. You can set the DI to be used as soon as the servo power is On (e.g., Servo On) to be a virtual DI and normally closed.

P2.040	DI13 functional planning		Address: 0250H 0251H
Default:	0x0100	Control mode:	All
Unit:	-	Setting range:	0x0000 to 0x015F (last two codes are DI codes)
Format:	HEX	Data size:	16-bit
Model:	E3C-L, E3C-L1		

Settings:

Refer to the description of P2.010. If there is no physical pin for DI13 on the model, this parameter can be a virtual digital input to be triggered through communication or to be used when the number of physical DI points is insufficient. You can set the DI to be used as soon as the servo power is On (e.g., Servo On) to be a virtual DI and normally closed.

P2.041	DO6 functional planning		Address: 0252H 0253H
Default:	0x0100	Control mode:	All
Unit:	-	Setting range:	0x0000 to 0x013F (last two codes are DO codes)
Format:	HEX	Data size:	16-bit
Model:	E3C-L, E3C-L1		

Settings:

Refer to the description of P2.018.

P2.042	Reserved

P2.043	Notch filter 2 - frequency		Address: 0256H 0257H
Default:	1000	Control mode:	All
Unit:	Hz	Setting range:	50 to 2000
Format:	DEC	Data size:	16-bit
Model:	E3C-L, E3C-L1		

Settings:

The resonance frequency of the second Notch filter. This function is disabled if P2.044 is 0.

P2.044	Notch filter 2 - attenuation level		Address: 0258H 0259H
Default:	0	Control mode:	All
Unit:	-dB	Setting range:	0 to 32
Format:	DEC	Data size:	16-bit
Model:	E3C-L, E3C-L1		

Settings:

The attenuation level of the second Notch filter. A value of 5 indicates -5 dB. Setting this parameter to 0 disables the second Notch filter.

P2.045	Notch filter 3 - frequency		Address: 025AH 025BH
Default:	1000	Control mode:	All
Unit:	Hz	Setting range:	50 to 2000
Format:	DEC	Data size:	16-bit
Model:	E3C-L, E3C-L1		

Settings:

The resonance frequency of the third Notch filter. This function is disabled if P2.046 is 0.

P2.046	Notch filter 3 - attenuation level		Address: 025CH 025DH
Default:	0	Control mode:	All
Unit:	-dB	Setting range:	0 to 32
Format:	DEC	Data size:	16-bit
Model:	E3C-L, E3C-L1		

Settings:

The attenuation level of the third Notch filter. A value of 5 indicates -5 dB. Setting this parameter to 0 disables the third Notch filter.

P2.047	Auto resonance suppression mode		Address: 025EH 025FH
Default:	1	Control mode:	All
Unit:	-	Setting range:	0 to 2
Format:	DEC	Data size:	16-bit
Model:	E3C-L, E3C-L1		

Settings:

0: disable auto resonance suppression. After the function is disabled, the existing resonance suppression parameter values do not change.

1: auto resonance suppression mode 1; when the servo determines it is stable*2, the servo stores the resonance suppression points to EEPROM (non-volatile memory for parameters) and disables the auto resonance suppression function (P2.047 = 0). Before the servo is stable,

(1) If you cycle power on the servo drive, the found resonance suppression points are lost and will not be saved. The servo searches for the resonance suppression points again.

(2) If P2.047 = 1 → 0, the known resonance suppression points will be stored to EEPROM.

(3) If P2.047 = 1 → 1, the known resonance suppression points will not be cleared, but they are not written to EEPROM yet. They are written to EEPROM when the servo determines it is stable.

2: auto resonance suppression mode 2; when the servo determines it is stable*2, the servo stores the known resonance suppression points to EEPROM (non-volatile memory for parameters). In this mode, the searching cycle continues. Before the servo is stable,

(1) If you cycle power on the servo drive, the resonance suppression points that are not yet stored in EEPROM are lost and will not be saved. The resonance suppression points that have been stored to EEPROM will not be affected.

(2) If P2.047 = 2 → 0, the known resonance suppression points will be stored to EEPROM.

(3) If P2.047 = 2 → 2, the known resonance suppression points will not be cleared, but they are not written to EEPROM yet. They are written to EEPROM when the servo determines it is stable.

Note:
1. If P2.047 = 0 → 1 or 0 → 2, the unfixed Notch filter is automatically cleared, the frequency is set to 1,000 Hz, and the attenuation level is set to 0 dB.
2. The servo determines it is stable when the following conditions are met: resonances have been suppressed, no other interference that affects the operation is found, and the motor speed is maintained at 10 rpm and above for 3 minutes.

Previous setting value	New setting value	Function
0	1	Clears the settings of P2.043 to P2.046; enables the auto resonance suppression function.
0	2	Clears the settings of P2.043 to P2.046; enables the auto resonance suppression function.
1	0	Saves the current settings of P2.043 to P2.046; disables the auto resonance suppression function.
1	1	Clears the settings of P2.043 to P2.046; enables the auto resonance suppression function.
1	2	Does not clear the settings of P2.043 to P2.046; continues to enable the auto resonance suppression function.
2	0	Saves the current settings of P2.043 to P2.046; disables the auto resonance suppression function.
2	1	Clears the settings of P2.043 to P2.046; enables the auto resonance suppression function.
2	2	Does not clear the settings of P2.043 to P2.046; continues to enable the auto resonance suppression function.

P2.048	Auto resonance detection level		Address: 0260H 0261H
Default:	100	Control mode:	All
Unit:	-	Setting range:	1 to 300
Format:	DEC	Data size:	16-bit
Model:	E3C-L, E3C-L1		

Settings:

Setting P2.048 higher reduces the resonance sensitivity; on the other hand, setting P2.048 lower improves the resonance sensitivity.

P2.049	Speed detection filter and jitter suppression		Address: 0262H 0263H
Default:	0x000B	Control mode:	All
Unit:	-	Setting range:	0x0000 to 0x001F
Format:	HEX	Data size:	16-bit
Model:	E3C-L, E3C-L1		

Settings:

Sets the filter for speed estimation.

Setting value	Speed estimation bandwidth (Hz)	Setting value	Speed estimation bandwidth (Hz)
0x0000	2500	0x0010	750
0x0001	2250	0x0011	700
0x0002	2100	0x0012	650
0x0003	2000	0x0013	600
0x0004	1800	0x0014	550
0x0005	1600	0x0015	500
0x0006	1500	0x0016	450
0x0007	1400	0x0017	400
0x0008	1300	0x0018	350
0x0009	1200	0x0019	300
0x000A	1100	0x001A	250
0x000B	1000	0x001B	200
0x000C	950	0x001C	175
0x000D	900	0x001D	150
0x000E	850	0x001E	125
0x000F	800	0x001F	100

P2.050	Position error clear setting		Address: 0264H 0265H
Default:	0x0000	Control mode:	PT / PR
Unit:	-	Setting range:	0x0000 to 0x0001
Format:	HEX	Data size:	16-bit
Model:	E3C-L, E3C-L1		

Settings:

Refer to Table 8.1 for digital input descriptions. Set the digital input as CCLR (DI: 0x04) to enable this function. When DI.CCLR is On, the position error in the servo drive is reset to 0.

P2.050 = 0: DI.CCLR is rising-edge triggered.

P2.050 = 1: DI.CCLR is level triggered.

P2.051	Reserved

P2.052▲	Rotary axis position scale		Address: 0268H 0269H
Default:	1000000000	Control mode:	All
Unit:	PUU	Setting range:	10000 to 1000000000
Format:	DEC	Data size:	32-bit
Model:	E3C-L, E3C-L1		

Settings:

Sets the scale of the rotary axis position, rotary axis command position, and rotary axis position feedback. If the value is too small, it may cause errors in the rotary axis position system.

The input range of P2.052 is:

$$\text{P2.052} > \text{Maximum motor speed (rpm)} \times (16777216 \times \frac{\text{P1.045}}{\text{P1.044}}) \div 57142$$

P2.053	Position integral compensation		Address: 026AH 026BH
Default:	0	Control mode:	All
Unit:	rad/s	Setting range:	0 to 1023
Format:	DEC	Data size:	16-bit
Model:	E3C-L, E3C-L1		

Settings:

Increasing the position control integral compensation reduces the position steady-state errors. If the value is too high, it may cause position overshoot and noise.

P2.054 - P2.059	Reserved

P2.060	E-Gear ratio - numerator N2		Address: 0278H 0279H
Default:	16777216	Control mode:	All
Unit:	pulse	Setting range:	1 to (2^{29}-1)
Format:	DEC	Data size:	32-bit
Model:	E3C-L, E3C-L1		

Settings:

The numerator of the E-Gear ratio can be selected with DI.GNUM0 and DI.GNUM1 (refer to Table 8.1).

If neither DI.GNUM0 nor DI.GNUM1 is defined, P1.044 is the default numerator of the E-Gear ratio.

Switch the numerator only when the servo is stopped in order to avoid mechanical vibration.

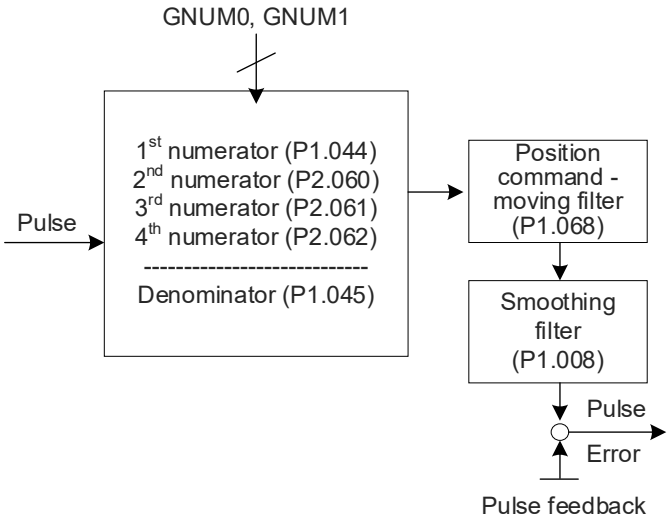

P2.061	E-Gear ratio - numerator N3		Address: 027AH 027BH
Default:	16777216	Control mode:	All
Unit:	pulse	Setting range:	1 to (2^{29}-1)
Format:	DEC	Data size:	32-bit
Model:	E3C-L, E3C-L1		

Settings:

Refer to the description of P2.060.

P2.062	E-Gear ratio - numerator N4		Address: 027CH 027DH
Default:	16777216	Control mode:	All
Unit:	pulse	Setting range:	1 to (2^{29}-1)
Format:	DEC	Data size:	32-bit
Model:	E3C-L, E3C-L1		

Settings:

Refer to the description of P2.060.

P2.063 - P2.064	Reserved

P2.065	Special bit register 1		Address: 0282H 0283H
Default:	0x030A	Control mode:	PT / PR / S / Sz
Unit:	-	Setting range:	0x0000 to 0xFFFF
Format:	HEX	Data size:	-
Model:	E3C-L, E3C-L1		

Settings:

Bit	7	6	5	4	3	2	1	0
Bit	15	14	13	12	11	10	9	8

Bit	Function	Description
Bit 0 - Bit 2	Reserved	-
Bit 3	Regenerative braking method	0: method 1 1: method 2, which releases the capacitor voltage faster and reduces the load voltage of the capacitor.
Bit 4	Reserved	-
Bit 5	Switch for AL003 (Undervoltage) and AL022 (Main power error) in the Servo Off state	0: when the servo is Off, disable the detection for AL003 (Undervoltage) and AL022 (Main power error). 1: when the servo is Off, enable the detection for AL003 (Undervoltage) and AL022 (Main power error).
Bit 6	Switch for pulse error (pulse frequency is too high) protection in PT mode	0: enable the function. 1: disable the function.
Bit 7	Reserved	-
Bit 8	Switch for motor power cable wiring error detection (AL031)	0: disable the detection. 1: enable the detection.
Bit 9	Switch for motor power cable disconnection detection (ALC31)	0: disable the detection. 1: enable the detection.
Bit 10	ZCLAMP function selection	The ZCLAMP function is enabled when all the following conditions are met. Condition 1: Speed mode Condition 2: DI.ZCLAMP is On Condition 3: motor speed is slower than the value of P1.038

8

Bit 10 description

Bit 10 = 0 and command source is the analog voltage. The ZCLAMP function uses the analog Speed command without acceleration or deceleration to determine if this function should be enabled. The motor is clamped at the position where ZCLAMP conditions are met.

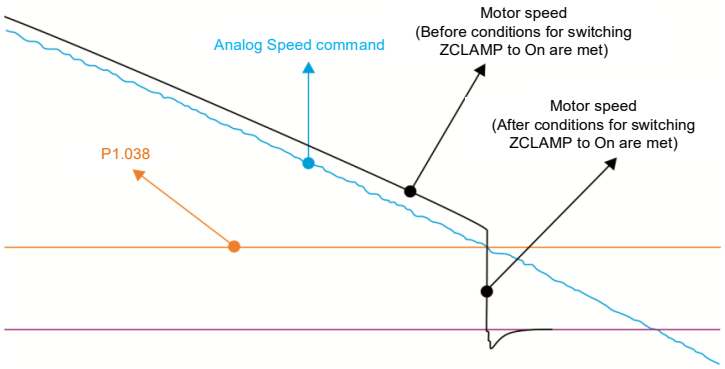

Bit 10 = 0 and command source is the internal register. The ZCLAMP function uses the register Speed command with acceleration or deceleration to determine if this function should be enabled. The motor is clamped at the position where ZCLAMP conditions are met.

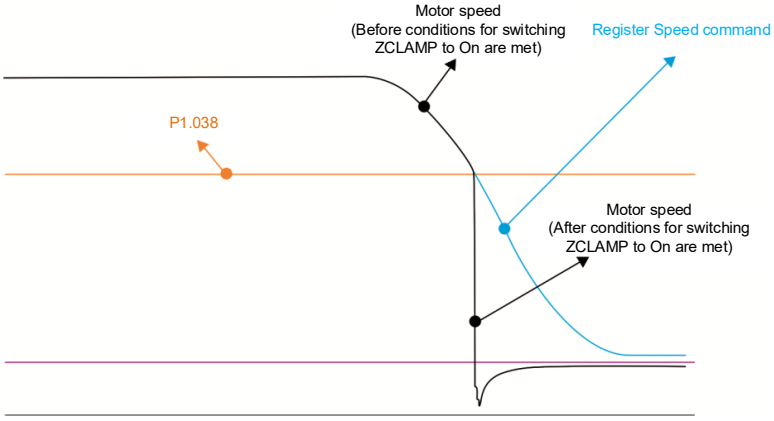

Bit 10 = 1 and command source is the analog voltage. The ZCLAMP function uses the analog Speed command without acceleration or deceleration to determine if this function should be enabled. When ZCLAMP conditions are met, the motor speed decelerates to 0 rpm by S-curve deceleration. If ZCLAMP conditions are not met, the motor follows the analog Speed command through the S-curve.

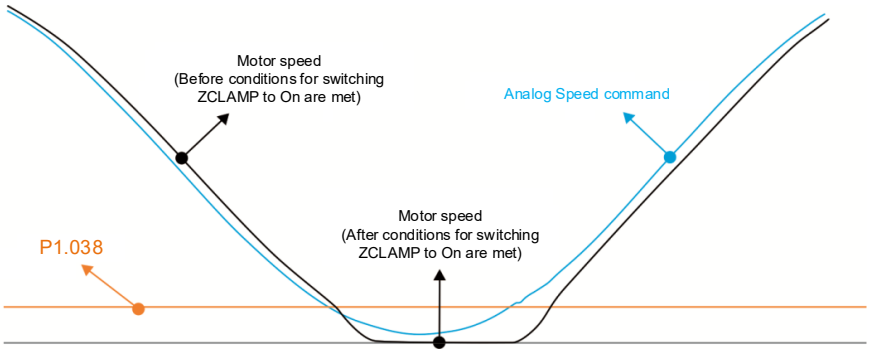

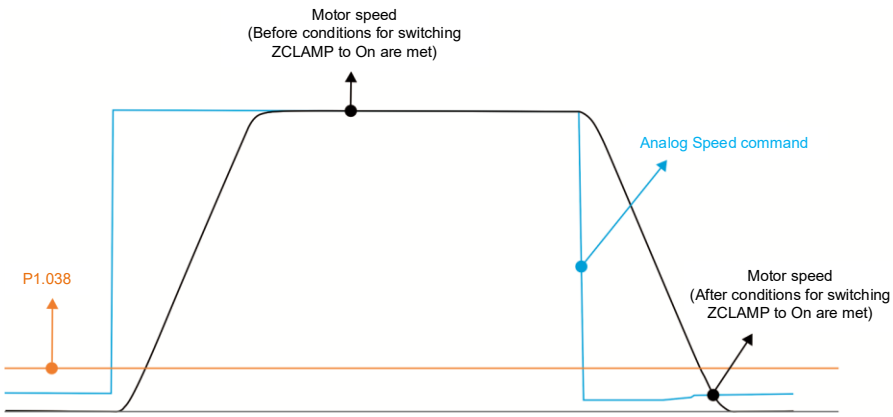

Bit 10 description
Bit 10 = 1 and command source is the internal register. The ZCLAMP function uses the register Speed command with acceleration or deceleration to determine if this function should be enabled. When ZCLAMP conditions are met, the motor speed is set to 0 rpm.

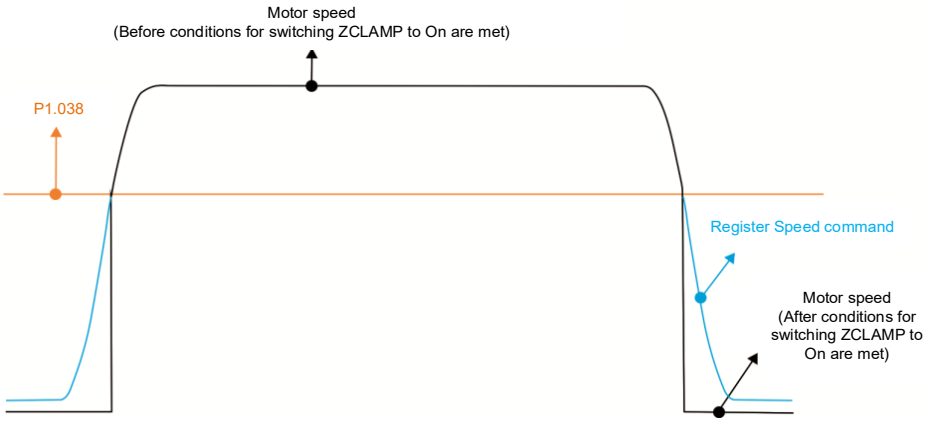

Bit	Function	Description
Bit 11	Pulse inhibit function	0: disable PL / NL pulse inhibit function. In PT mode, the servo drive receives pulse position commands for both positive- and negative-direction operations whether the motor reaches the PL or NL. 1: enable PL / NL pulse inhibit function. In PT mode, if the motor reaches the PL, the servo drive receives pulse position commands for negative-direction operation and stops receiving pulse position commands for positive-direction operation. In PT mode, if the motor reaches the NL, the servo drive receives pulse position commands for positive-direction operation and stops receiving pulse position commands for negative-direction operation.
Bit 12	Switch for AL022 (Main power error) detection	0: enable the detection. 1: disable the detection.
Bit 13	Switch for AL018 (OA and OB output error) detection	0: enable the detection. 1: disable the detection.
Bit 14	Reserved	-
Bit 15	Friction compensation mode selection	0: when the speed is lower than P1.038, the compensation value remains unchanged. 1: when the speed is lower than P1.038, the compensation value reduces to 0.

P2.066	Special bit register 2		Address: 0284H 0285H
Default:	0x0010	Control mode:	PT / PR / S / Sz
Unit:	-	Setting range:	0x0000 to 0x983F
Format:	HEX	Data size:	16-bit
Model:	E3C-L, E3C-L1		

8

Settings:

Bit	7	6	5	4	3	2	1	0
Bit	15	14	13	12	11	10	9	8

Bit	Function	Description
Bit 0 - Bit 1	Reserved	-
Bit 2	Disable the latch for AL003 (Undervoltage)	0: latch enabled; the undervoltage error (AL003) is not cleared automatically. 1: latch disabled; the undervoltage error (AL003) is cleared automatically.
Bit 3	Reserved	-
Bit 4	Disable the detection for AL044 (Servo function operational warning)	0: enable the detection. 1: disable the detection.
Bit 5 - Bit 8	Reserved	-
Bit 9	Set AL003 (Undervoltage) as ALM or WARN	0: WARN 1: ALM
Bit 10 - Bit 11	Reserved	-
Bit 12	Set AL022 (Main power error) as ALM or WARN	0: WARN 1: ALM
Bit 13 - Bit 14	Reserved	-
Bit 15	Definition of P1.046 setting	0: the setting of P1.046 is the output single-phase pulses per motor revolution. For example, when P1.046 = 4 (pulses), the controller receives 16 pulses in one motor revolution. 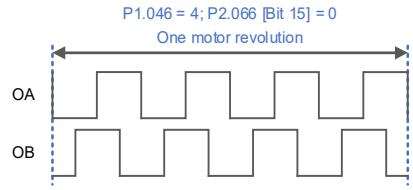 1: the setting of P1.046 is the output pulses with quadruple frequency per motor revolution. For example, when P1.046 = 5 (pulses), the controller receives 5 pulses in one motor revolution. 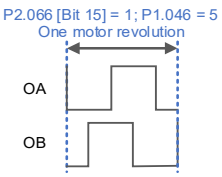

P2.067	Inertia estimation stability threshold			Address: 0286H 0287H
Operation interface:	Panel / software	Communication	Control mode:	All
Default:	1.5	15	Data size:	16-bit
Unit:	1 times	0.1 times	-	-
Setting range:	0.0 to 200.0	0 to 2000	-	-
Format:	One decimal	DEC	-	-
Model:	E3C-L, E3C-L1			

Settings:

In Semi-auto mode (P2.032 = 0x0002), when the range of the inertia variation is smaller than P2.067 for a period of time, then the inertia estimation is considered complete.

P2.068	Following error compensation switch		Address: 0288H 0289H
Default:	0x0000	Control mode:	All
Unit:	-	Setting range:	0x0000 to 0x2101
Format:	HEX	Data size:	16-bit
Model:	E3C-L, E3C-L1		

Settings:



X	Following error compensation switch	Z	DI.STP triggering method
Y	Reserved	U	Reserved

- X: following error compensation switch (functions under the condition of P1.036 > 1)

  0: disable following error compensation

  1: enable following error compensation

- Z: DI.STP triggering method

  0: rising-edge triggered

  1: level triggered

P2.069●	Absolute encoder		Address: 028AH 028BH
Default:	0x0000	Control mode:	All
Unit:	-	Setting range:	0x0000 to 0x0111
Format:	HEX	Data size:	16-bit
Model:	E3C-L, E3C-L1		

8

Settings:



X	Operation mode setting	Z	Function of preventing rotary axis position offset when overflow occurs
Y	Pulse command setting when absolute position is lost	U	Reserved

- X: operation mode setting

  0: incremental mode. An absolute type motor can be operated as an incremental type motor.

  1: absolute mode. This setting is only applicable to an absolute type motor. If it is used for an incremental type motor, AL069 occurs.

- Y: pulse command setting when absolute position is lost

  0: when AL060 or AL06A occurs, the system cannot receive a pulse command.

  1: when AL060 or AL06A occurs, the system can receive a pulse command.

- Z: function of preventing rotary axis position offset when overflow occurs

  0: when the number of revolutions of the encoder overflows, the absolute position and the rotary axis position are offset after power is off.

  1: the rotary axis position is not affected by overflow, but the absolute position is offset. Therefore, using the rotary axis position feedback (monitoring variable 091) is suggested (AL062 and AL289 do not function).

Note: changes to this setting are effective only after power is cycled on the servo drive.

P2.070	Read data selection		Address: 028CH 028DH
Default:	0x0000	Control mode:	All
Unit:	-	Setting range:	0x0000 to 0x0007
Format:	HEX	Data size:	16-bit
Model:	E3C-L, E3C-L1		

Settings:

Bit	7	6	5	4	3	2	1	0
Bit	15	14	13	12	11	10	9	8

Bit	Function	Description
Bit 0	DI/DO data unit setting	0: PUU 1: pulse
Bit 1	Unit setting for P0.051 and P0.052	0: P0.051 is invalid; P0.052 is in units of PUU. 1: P0.051 is in units of number of turns; P0.052 is in units of pulse.
Bit 2	Overflow warning setting	0: the servo drive issues the overflow warnings AL289 (PUU) and AL062 (pulse). 1: no overflow warning.
Bit 3 - Bit 15	Reserved	-

P2.071■	Absolute position homing		Address: 028EH 028FH
Default:	0x0000	Control mode:	All
Unit:	-	Setting range:	0x0000 to 0x0001
Format:	HEX	Data size:	16-bit
Model:	E3C-L, E3C-L1		

Settings:

Setting P2.071 to 0x0001 resets the current absolute position of the encoder. The clear function is enabled by setting P2.008 to 271 and P2.069.X to 1.

P2.072 - P2.093	Reserved

8

P2.094▲	Special bit register 3		Address: 02BCH 02BDH
Default:	0x00D4	Control mode:	PT / PR / S / Sz
Unit:	-	Setting range:	0x0000 to 0x10F4
Format:	HEX	Data size:	16-bit
Model:	E3C-L, E3C-L1		

Settings:

Bit	7	6	5	4	3	2	1	0
Bit	15	14	13	12	11	10	9	8

Bit	Function	Description
Bit 0 - Bit 3	Reserved	-
Bit 4	Dynamic brake options	0: disable new dynamic brake. 1: enable new dynamic brake.
Bit 5	Switch for AL016 (Abnormal IGBT temperature)	0: enable AL016 (Abnormal IGBT temperature). 1: disable AL016 (Abnormal IGBT temperature).
Bit 6	Switch for AL007 detection in Position modes	Switch for AL007 detection in Position modes (PT and PR) 0: disable AL007 detection. 1: enable AL007 detection.
Bit 7	Switch for AL086 (Regenerative resistor overload)	0: disable 1: enable
Bit 8 - Bit 15	Reserved	-

P2.095 - P2.122	Reserved

P2.123	Delay time before alarm reset		Address: 02F6H 02F7H
Default:	3000	Control mode:	All
Unit:	ms	Setting range:	0 to 20000
Format:	DEC	Data size:	16-bit
Model:	E3C-L, E3C-L1		

Settings:

When an alarm occurs, performing “Alarm reset” is not allowed until this delay time has elapsed. You can monitor the remaining time with the monitoring variable -248 (Alarm reset delay time).

This parameter setting affects the alarms: AL005, AL006, AL016, AL02C, AL02F, AL085, and AL086.

Important: setting P2.123 lower than 3000 may cause component overheating.

P3.xxx Communication parameters

P3.000●	Address		Address: 0300H 0301H
Default:	0x007F	Control mode:	All
Unit:	-	Setting range:	0x0001 to 0x007F
Format:	HEX	Data size:	16-bit
Model:	E3C-L, E3C-L1		

Settings:

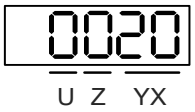

UZ	Reserved	YX	Communication address setting

The address setting required for using RS-232 or RS-485 communication. Make sure there are no duplicate addresses in the same communication circuit, or it may cause communication failure.

■ RS-232 / RS-485

When the master station sets the communication address to 0xFF, the address is always 0xFF in the response message.

P3.001●	Transmission speed		Address: 0302H 0303H
Default:	0x0033	Control mode:	All
Unit:	-	Setting range:	0x0000 to 0x0055
Format:	HEX	Data size:	16-bit
Model:	E3C-L, E3C-L1		

Settings:



X	RS-232 transmission speed	Z	Reserved
Y	RS-485 transmission speed	U	Reserved

■ X: RS-232 transmission speed

0: 4800 bps	1: 9600 bps	2: 19200 bps
3: 38400 bps	4: 57600 bps	5: 115200 bps

■ Y: RS-485 transmission speed

0: 4800 bps	1: 9600 bps	2: 19200 bps
3: 38400 bps	4: 57600 bps	5: 115200 bps

8

P3.002	Modbus communication protocol		Address: 0304H 0305H
Default:	0x0066	Control mode:	All
Unit:	-	Setting range:	0x0000 to 0x0088
Format:	HEX	Data size:	16-bit
Model:	E3C-L, E3C-L1		

Settings:



X	RS-232 communication protocol	Z	Reserved
Y	RS-485 communication protocol	U	Reserved

■ X: RS-232 communication protocol

0: 7, N, 2 (Modbus, ASCII)	1: 7, E, 1 (Modbus, ASCII)	2: 7, O, 1 (Modbus, ASCII)
3: 8, N, 2 (Modbus, ASCII)	4: 8, E, 1 (Modbus, ASCII)	5: 8, O, 1 (Modbus, ASCII)
6: 8, N, 2 (Modbus, RTU)	7: 8, E, 1 (Modbus, RTU)	8: 8, O, 1 (Modbus, RTU)

■ Y: RS-485 communication protocol

0: 7, N, 2 (Modbus, ASCII)	1: 7, E, 1 (Modbus, ASCII)	2: 7, O, 1 (Modbus, ASCII)
3: 8, N, 2 (Modbus, ASCII)	4: 8, E, 1 (Modbus, ASCII)	5: 8, O, 1 (Modbus, ASCII)
6: 8, N, 2 (Modbus, RTU)	7: 8, E, 1 (Modbus, RTU)	8: 8, O, 1 (Modbus, RTU)

P3.003	Modbus communication error handling		Address: 0306H 0307H
Default:	0x0000	Control mode:	All
Unit:	-	Setting range:	0x0000 to 0x0001
Format:	HEX	Data size:	16-bit
Model:	E3C-L, E3C-L1		

Settings:

Setting value	Function
0x0000	Display an alarm and let the motor continue operating.
0x0001	Display an alarm and let the motor decelerate to a stop. Deceleration time is set in P5.003.B.

P3.004	Modbus communication timeout		Address: 0308H 0309H
Default:	0	Control mode:	All
Unit:	sec	Setting range:	0 to 20
Format:	DEC	Data size:	16-bit
Model:	E3C-L, E3C-L1		

Settings:

Setting value	Function
0	Disable the timeout function.
1 - 19	Enable the communication timeout immediately.

P3.005	Modbus communication		Address: 030AH 030BH
Default:	0x0000	Control mode:	All
Unit:	-	Setting range:	0x0000 to 0x0001
Format:	HEX	Data size:	16-bit
Model:	E3C-L, E3C-L1		

Settings:



X	Use RS-232 / RS-485 standard Modbus communication or connect to ASDA-Soft with RS-232	Z	Reserved
Y	Reserved	U	Reserved

■ X: use RS-232 / RS-485 standard Modbus communication or connect to ASDA-Soft with RS-232

0: use RS-232 / RS-485 standard Modbus communication.

1: connect to ASDA-Soft with RS-232.

P3.006■	Digital input (DI) control switch		Address: 030CH 030DH
Default:	0x0000	Control mode:	All
Unit:	-	Setting range:	0x0000 to 0x1FFF
Format:	HEX	Data size:	16-bit
Model:	E3C-L, E3C-L1		

Settings:

Each bit of this parameter determines the input source of one DI signal: Bit 0 - Bit 9 correspond to DI1 - DI10; Bit 10 - Bit 12 correspond to DI11 - DI13. The setting for each bit is as follows:

0: DI status is controlled by the external terminal block.

1: DI status is controlled by P4.007.

For more information on DI functional planning, refer to the following:

DI1 - DI8: P2.010 - P2.017

DI9 - DI13: P2.036 - P2.040

P3.007	Modbus communication response delay time		Address: 030EH 030FH
Default:	0	Control mode:	All
Unit:	0.5 ms	Setting range:	0 to 1000
Format:	DEC	Data size:	16-bit
Model:	E3C-L, E3C-L1		

Settings:

Delays the time of communication response from servo drive to controller.

P3.008	Reserved

P4.xxx Diagnosis parameters

P4.000	Fault record (last)		Address: 0400H 0401H
Default:	0x00000000	Control mode:	All
Unit:	-	Setting range:	-
Format:	HEX	Data size:	32-bit
Model:	E3C-L, E3C-L1		

Settings:

The last fault record.

Low word (LXXXX): the alarm number.

P4.001★	Fault record (second to last)		Address: 0402H 0403H
Default:	0x00000000	Control mode:	All
Unit:	-	Setting range:	-
Format:	HEX	Data size:	32-bit
Model:	E3C-L, E3C-L1		

Settings:

The second to last fault record.

Low word (LXXXX): the alarm number.

P4.002★	Fault record (third to last)		Address: 0404H 0405H
Default:	0x00000000	Control mode:	All
Unit:	-	Setting range:	-
Format:	HEX	Data size:	32-bit
Model:	E3C-L, E3C-L1		

Settings:

The third to last fault record.

Low word (LXXXX): the alarm number.

P4.003★	Fault record (fourth to last)		Address: 0406H 0407H
Default:	0x00000000	Control mode:	All
Unit:	-	Setting range:	-
Format:	HEX	Data size:	32-bit
Model:	E3C-L, E3C-L1		

Settings:

The fourth to last fault record.

Low word (LXXXX): the alarm number.

P4.004★	Fault record (fifth to last)		Address: 0408H 0409H
Default:	0x00000000	Control mode:	All
Unit:	-	Setting range:	-
Format:	HEX	Data size:	32-bit
Model:	E3C-L, E3C-L1		

Settings:

The fifth to last fault record.

Low word (LXXXX): the alarm number.

P4.005	Servo motor JOG control		Address: 040AH 040BH
Default:	20	Control mode:	All
Unit:	rpm	Setting range:	0 to 5000
Format:	DEC	Data size:	16-bit
Model:	E3C-L, E3C-L1		

Settings:

The control methods are as follows.

1. Panel control:

   Set the P4.005 JOG speed with the panel and it displays the “JOG” symbol. Pressing the UP key controls the JOG operation in the positive direction; pressing the DOWN key controls the JOG operation in the negative direction. Release the key to stop the JOG operation. If there is any error in this setting, then the motor cannot operate. The maximum JOG speed is the maximum speed of the servo motor.

2. DI control:

   If you set the DIs to 0x37 (JOGU) and 0x38 (JOGD) (refer to Table 8.1), then the JOG operation in the positive or negative direction is controlled with the DIs.

3. Communication control:

0: stop operation	1 - 4997, 5000: JOG speed
4998*[2]: JOG operation in negative direction	4999*[2]: JOG operation in positive direction

Note:
1. When using communication to write values frequently, set P2.030 to 5.
2. The operation direction (positive / negative) varies depending on the value of P1.001.Z.

P4.006■	Software digital output register (readable and writable)		Address: 040CH 040DH
Default:	0x0000	Control mode:	All
Unit:	-	Setting range:	0x0000 to 0x00FF
Format:	HEX	Data size:	16-bit
Model:	E3C-L, E3C-L1		

Settings:

Bit	Description	Bit	Description
Bit 0	Corresponds to DO.SPO_0 (0x30)	Bit 8	Corresponds to DO.SPO_8 (0x38)
Bit 1	Corresponds to DO.SPO_1 (0x31)	Bit 9	Corresponds to DO.SPO_9 (0x39)
Bit 2	Corresponds to DO.SPO_2 (0x32)	Bit 10	Corresponds to DO.SPO_A (0x3A)
Bit 3	Corresponds to DO.SPO_3 (0x33)	Bit 11	Corresponds to DO.SPO_B (0x3B)
Bit 4	Corresponds to DO.SPO_4 (0x34)	Bit 12	Corresponds to DO.SPO_C (0x3C)
Bit 5	Corresponds to DO.SPO_5 (0x35)	Bit 13	Corresponds to DO.SPO_D (0x3D)
Bit 6	Corresponds to DO.SPO_6 (0x36)	Bit 14	Corresponds to DO.SPO_E (0x3E)
Bit 7	Corresponds to DO.SPO_7 (0x37)	Bit 15	Corresponds to DO.SPO_F (0x3F)

If P2.018 = 0x0130, then the output of DO1 is the status of P4.006 [Bit 0], and so forth. Set the DO codes (0x30 - 0x3F) and then write to P4.006.

P4.007■	Multifunction digital input		Address: 040EH 040FH
Default:	0x0000	Control mode:	All
Unit:	-	Setting range:	0x0000 to 0x1FFF
Format:	HEX	Data size:	16-bit
Model:	E3C-L, E3C-L1		

Settings:

The source of the DI signal can be the external hardware terminal or the internal software DI (P4.007), which is determined by P3.006. If the corresponding bit of P3.006 is 1, it means the source is the software DI (P4.007); if the corresponding bit is 0, then the source is the hardware DI. See the following figure:

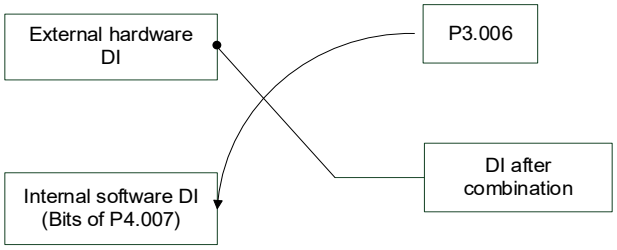

Reading P4.007: shows the DI status after combining external DI and software DI.

Writing to P4.007: writes the software DI status. This function is the same whether you use the panel or communication to set the parameter.

For example: if the read value of P4.007 is 0x0011, it means DI1 and DI5 are On after combination; if the value written to P4.007 is 0x0011, it means the software DI1 and DI5 are On. Refer to P2.010 - P2.017 and P2.036 - P2.040 for more information on DI functional planning.

P4.008★	Input status of servo drive panel (read-only)		Address: 0410H 0411H
Default:	-	Control mode:	All
Unit:	-	Setting range:	Read-only
Format:	HEX	Data size:	16-bit
Model:	E3C-L, E3C-L1		

Settings:

Read this parameter through communication and check if the five keys (MODE, UP, DOWN, SHIFT, and SET) can function normally.

P4.009★	Digital output status (read-only)		Address: 0412H 0413H
Default:	-	Control mode:	All
Unit:	-	Setting range:	0x0000 to 0x001F
Format:	HEX	Data size:	16-bit
Model:	E3C-L, E3C-L1		

Settings:

There is no difference either reading by panel or through communication.

P4.010▲■	Hardware calibration options		Address: 0414H 0415H
Default:	0	Control mode:	All
Unit:	-	Setting range:	0 to 15
Format:	DEC	Data size:	16-bit
Model:	E3C-L, E3C-L1		

Settings:

Setting value	Function	Setting value	Function
0	Reserved	4	Calibrate the hardware offset of the current detector (W phase)
1	Calibrate the hardware offset of the analog speed input	5	Calibrate the hardware offsets described in setting values 1 - 4
2	Calibrate the hardware offset of the analog torque input	6 - 15	Reserved
3	Calibrate the hardware offset of the current detector (V phase)	-	-

Note: the calibration function must be enabled by setting P2.008. During calibration, remove all external wirings for torque input and make sure the servo is in the Off state.

P4.011	Analog speed input 1 - hardware offset calibration		Address: 0416H 0417H
Default:	Factory setting	Control mode:	All
Unit:	-	Setting range:	13926 to 18842
Format:	DEC	Data size:	16-bit
Model:	E3C-L, E3C-L1		

Settings:

Manually calibrate the hardware offset. The function must be enabled by setting P2.008. Do not change the auxiliary calibration as this parameter cannot be reset.

P4.012	Analog speed input 2 - hardware offset calibration		Address: 0418H 0419H
Default:	Factory setting	Control mode:	All
Unit:	-	Setting range:	13926 to 18842
Format:	DEC	Data size:	16-bit
Model:	E3C-L, E3C-L1		

Settings:

Refer to the description of P4.011.

P4.013	Analog torque input 1 - hardware offset calibration		Address: 041AH 041BH
Default:	Factory setting	Control mode:	All
Unit:	-	Setting range:	13926 to 18842
Format:	DEC	Data size:	16-bit
Model:	E3C-L, E3C-L1		

Settings:

Refer to the description of P4.011.

P4.014	Analog torque input 2 - hardware offset calibration		Address: 041CH 041DH
Default:	Factory setting	Control mode:	All
Unit:	-	Setting range:	13926 to 18842
Format:	DEC	Data size:	16-bit
Model:	E3C-L, E3C-L1		

Settings:

Refer to the description of P4.011.

P4.015	Current detector (V1 phase) - hardware offset calibration		Address: 041EH 041FH
Default:	Factory setting	Control mode:	All
Unit:	-	Setting range:	13926 to 18842
Format:	DEC	Data size:	16-bit
Model:	E3C-L, E3C-L1		

Settings:

Refer to the description of P4.011.

P4.016	Current detector (V2 phase) - hardware offset calibration		Address: 0420H 0421H
Default:	Factory setting	Control mode:	All
Unit:	-	Setting range:	13926 to 18842
Format:	DEC	Data size:	16-bit
Model:	E3C-L, E3C-L1		

Settings:

Refer to the description of P4.011.

P4.017	Current detector (W1 phase) - hardware offset calibration		Address: 0422H 0423H
Default:	Factory setting	Control mode:	All
Unit:	-	Setting range:	13926 to 18842
Format:	DEC	Data size:	16-bit
Model:	E3C-L, E3C-L1		

Settings:

Refer to the description of P4.011.

P4.018	Current detector (W2 phase) - hardware offset calibration		Address: 0424H 0425H
Default:	Factory setting	Control mode:	All
Unit:	-	Setting range:	13926 to 18842
Format:	DEC	Data size:	16-bit
Model:	E3C-L, E3C-L1		

Settings:

Refer to the description of P4.011.

P4.019	Reserved

P4.020	Analog monitor output (Ch1) - offset compensation value		Address: 0428H 0429H
Default:	0	Control mode:	All
Unit:	mV	Setting range:	-800 to +800
Format:	DEC	Data size:	16-bit
Model:	E3C-L, E3C-L1		

Settings:

Manually adjust the compensation value for the offset (cannot reset). The function must be enabled by setting P2.008.

P4.021	Analog monitor output (Ch2) - offset compensation value		Address: 042AH 042BH
Default:	0	Control mode:	All
Unit:	mV	Setting range:	-800 to +800
Format:	DEC	Data size:	16-bit
Model:	E3C-L, E3C-L1		

Settings:

Manually adjust the compensation value for the offset (cannot reset). The function must be enabled by setting P2.008.

P4.022	Analog speed input - offset compensation value		Address: 042CH 042DH
Default:	0	Control mode:	S
Unit:	mV	Setting range:	-5000 to +5000
Format:	DEC	Data size:	16-bit
Model:	E3C-L, E3C-L1		

Settings:

Manually adjust the compensation value for the offset.

P4.023	Analog torque input - offset compensation value		Address: 042EH 042FH
Default:	0	Control mode:	T
Unit:	mV	Setting range:	-5000 to +5000
Format:	DEC	Data size:	16-bit
Model:	E3C-L, E3C-L1		

Settings:

Manually adjust the compensation value for the offset.

P4.024	Level of undervoltage error		Address: 0430H 0431H
Default:	160 (220V models) 282 (400V models)	Control mode:	All
Unit:	V (rms)	Setting range:	140 to 380
Format:	DEC	Data size:	16-bit
Model:	E3C-L, E3C-L1		

Settings:

When the DC bus voltage is lower than P4.024 x $\sqrt{2}$, AL003 (Undervoltage) occurs.

P5.xxx Motion control parameters

P5.000★■	Firmware subversion		Address: 0500H 0501H
Default:	Factory setting	Control mode:	All
Unit:	-	Setting range:	-
Format:	DEC	Data size:	32-bit
Model:	E3C-L, E3C-L1		

Settings:

The low word is the subversion of the firmware.

P5.001 - P5.002	Reserved

P5.003	Deceleration time for auto-protection		Address: 0506H 0507H
Default:	0xEEEFEEFF	Control mode:	All (except for PT)
Unit:	-	Setting range:	0x00000000 to 0xFFFFFFFF
Format:	HEX	Data size:	32-bit
Model:	E3C-L, E3C-L1		

Settings:

Digit	D	C	B	A	U	Z	Y	X
Function	STP	PFQS	CTO	OVF	SNL	SPL	NL	PL
Range of deceleration time	0 - F	0 - F	0 - F	0 - F	0 - F	0 - F	0 - F	0 - F

- OVF (DO: 0x12, Position command / feedback overflows), CTO (AL020 Serial communication timeout), SPL, SNL, PL, and NL are auto-protection functions.
- STP is the stop function.
- Use 0 - F to index the deceleration time of P5.020 - P5.035. For example: if you set P5.003.X to A, then the deceleration time of PL is determined by P5.030.

P5.004	Homing methods		Address: 0508H 0509H
Default:	0x0000	Control mode:	PR
Unit:	-	Setting range:	0x0000 to 0x012A
Format:	HEX	Data size:	16-bit
Model:	E3C-L, E3C-L1		

Settings:



Definition of each setting value:

U	Z	Y	X
Reserved	Limit setting	Z pulse setting	Homing method
-	0 to 1	0 to 2	0 to A
	-	Y = 0: reverse to Z pulse Y = 1: go forward to Z pulse Y = 2: do not look for Z pulse	X = 0: homing in forward direction and define the positive limit as the homing origin
			X = 1: homing in reverse direction and define the negative limit as the homing origin
	When reaching the limit: Z = 0: show error Z = 1: reverse direction		X = 2: homing in forward direction, ORG: OFF→ON as the homing origin
			X = 3: homing in reverse direction, ORG: OFF→ON as the homing origin
		-	X = 4: look for Z pulse in forward direction and define it as the homing origin
			X = 5: look for Z pulse in reverse direction and define it as the homing origin
		Y = 0: reverse to Z pulse Y = 1: go forward to Z pulse Y = 2: do not look for Z pulse	X = 6: homing in forward direction, ORG: ON→OFF as the homing origin
			X = 7: homing in reverse direction, ORG: ON→OFF as the homing origin
	-	-	X = 8: define current position as the origin
	When reaching the limit: Z = 0: show error Z = 1: reverse direction	Y = 0: reverse to Z pulse Y = 2: do not look for Z pulse	X = 9: torque homing in forward direction
			X = A: torque homing in reverse direction

P5.005	High speed homing (first speed setting)			Address: 050AH 050BH
Operation interface:	Panel / software	Communication	Control mode:	PR (set with P5.004)
Default:	100.0	1000	Data size:	32-bit
Unit:	1 rpm	0.1 rpm	-	-
Setting range:	0.1 to 2000.0	1 to 20000	-	-
Format:	DEC	DEC	-	-
Model:	E3C-L, E3C-L1			

Settings:

The first speed setting for high speed homing.

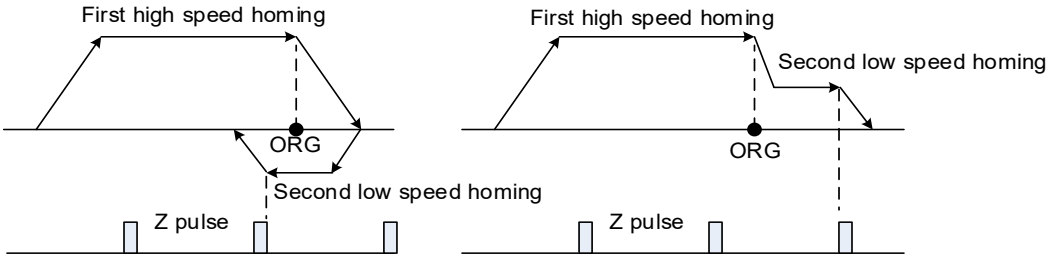

P5.006	Low speed homing (second speed setting)			Address: 050CH 050DH
Operation interface:	Panel / software	Communication	Control mode:	PR (set with P5.004)
Default:	20.0	200	Data size:	32-bit
Unit:	1 rpm	0.1 rpm	-	-
Setting range:	0.1 to 500.0	1 to 5000	-	-
Format:	DEC	DEC	-	-
Model:	E3C-L, E3C-L1			

Settings:

The second speed setting for low speed homing.

P5.007■	PR path trigger register		Address: 050EH 050FH
Default:	0	Control mode:	PR
Unit:	-	Setting range:	0 to 1000
Format:	DEC	Data size:	16-bit
Model:	E3C-L, E3C-L1		

Settings:

Setting value	Function
0	Start homing.
1 - 63	Execute the specified PR path, which is the same as using DI.CTRG (0x08) + POSn.
64 - 999	Reserved
1000	Execute the stop command, which is the same as using DI.STP (0x46).

Example 1: to trigger PR#02

Through	Description
DI	DI.POS1 (0x12) (specifying PR#02 as the target) + DI.CTRG (0x08) (command triggering)
P5.007	Set P5.007 = 2 to start executing PR#02.

Example 2: when setting the command X in P5.007 and reading P5.007:

Read value	Description	Example
X	The command is incomplete and DO.TPOS (0x05) is Off.	If the read value is 3, it means PR#03 is being executed.
X + 10000	The command is complete and DO.TPOS (0x05) is Off.	If the read value is 10003, it means PR#03 is complete, but the motor has not reached the target position yet.
X + 20000	The command is complete and DO.TPOS (0x05) is On.	If the read value is 20003, it means PR#03 is complete and the motor has reached the target position.

P5.008	Positive software limit		Address: 0510H 0511H
Default:	2147483647	Control mode:	PR
Unit:	PUU	Setting range:	-2147483648 to +2147483647
Format:	DEC	Data size:	32-bit
Model:	E3C-L, E3C-L1		

Settings:

In PR mode, if the motor moves in the positive direction and its position feedback exceeds the value of P5.008, AL283 occurs.

P5.009	Negative software limit		Address: 0512H 0513H
Default:	-2147483648	Control mode:	PR
Unit:	PUU	Setting range:	-2147483648 to +2147483647
Format:	DEC	Data size:	32-bit
Model:	E3C-L, E3C-L1		

Settings:

In PR mode, if the motor moves in the negative direction and its position feedback exceeds the value of P5.009, AL285 occurs.

P5.010★■	Data array: data size		Address: 0514H 0515H
Default:	-	Control mode:	All
Unit:	-	Setting range:	Read-only
Format:	DEC	Data size:	16-bit
Model:	E3C-L, E3C-L1		

Settings:

The total data size is N x 32 bits, where N indicates the number of data sets returned to the data array.

P5.011■	Data array: address for reading and writing		Address: 0516H 0517H
Default:	0	Control mode:	All
Unit:	-	Setting range:	0 to (value of P5.010 minus 1)
Format:	DEC	Data size:	16-bit
Model:	E3C-L, E3C-L1		

Settings:

Specify the address to read or write the data array. Refer to Chapter 7 for detailed instructions.

P5.012■	Data array: window #1 for reading and writing		Address: 0518H 0519H
Default:	0	Control mode:	All
Unit:	-	Setting range:	-2147483648 to +2147483647
Format:	DEC	Data size:	32-bit
Model:	E3C-L, E3C-L1		

Settings:

Window #1: when reading through the panel, the P5.011 setting value remains the same, but when reading or writing through other methods, it automatically adds 1. Refer to Section 7.1.7 Data array for detailed instructions.

P5.013■	Data array: window #2 for reading and writing		Address: 051AH 051BH
Default:	0	Control mode:	All
Unit:	-	Setting range:	-2147483648 to +2147483647
Format:	DEC	Data size:	32-bit
Model:	E3C-L, E3C-L1		

Settings:

Window #2: when reading through the panel or reading and writing through communication, the P5.011 setting value automatically adds 1, but this parameter is not writable through the panel. Refer to Section 7.1.7 Data array for detailed instructions.

P5.014	Reserved

P5.015■	PATH 1 - PATH 2 volatile setting		Address: 051EH 051FH
Default:	0x0000	Control mode:	PR
Unit:	-	Setting range:	0x0000 to 0x0011
Format:	HEX	Data size:	16-bit
Model:	E3C-L, E3C-L1		

Settings:

This parameter allows you to write data to the target continuously through communication.



X	PATH 1 volatile setting	Z	Reserved
Y	PATH 2 volatile setting	U	Reserved

- X: PATH 1 volatile setting

  0: non-volatile

  1: volatile

- Y: PATH 2 volatile setting

  0: non-volatile

  1: volatile

P5.016■	Axis position - main encoder		Address: 0520H 0521H
Default:	0	Control mode:	All
Unit:	PUU	Setting range:	-2147483648 to +2147483647
Format:	DEC	Data size:	32-bit
Model:	E3C-L, E3C-L1		

Settings:

Read: main encoder position feedback, which is the monitoring variable 000 (00h) + offset value.

Write: writing any value to the parameter neither changes the monitoring variable 000 (00h) nor affects the positioning system. It adjusts the offset value only for easier observation.

P5.017	Reserved

P5.018	Axis position - pulse command		Address: 0524H 0525H
Default:	0	Control mode:	All
Unit:	pulse	Setting range:	-2147483648 to +2147483647
Format:	DEC	Data size:	32-bit
Model:	E3C-L, E3C-L1		

Settings:

Pulse count from the pulse command.

P5.019	Reserved

P5.020	Acceleration / deceleration time #0		Address: 0528H 0529H
Default:	200	Control mode:	PR
Unit:	ms	Setting range:	1 to 65500
Format:	DEC	Data size:	16-bit
Model:	E3C-L, E3C-L1		

Settings:

The time setting for acceleration or deceleration in PR mode.

Rotary motor: the time duration required for the motor to accelerate from 0 to 3,000 rpm or decelerate from 3,000 rpm to 0.

P5.021	Acceleration / deceleration time #1		Address: 052AH 052BH
Default:	300	Control mode:	PR
Unit:	ms	Setting range:	1 to 65500
Format:	DEC	Data size:	16-bit
Model:	E3C-L, E3C-L1		

Settings:

The time setting for acceleration or deceleration in PR mode. Refer to P5.020 for details.

P5.022	Acceleration / deceleration time #2		Address: 052CH 052DH
Default:	500	Control mode:	PR
Unit:	ms	Setting range:	1 to 65500
Format:	DEC	Data size:	16-bit
Model:	E3C-L, E3C-L1		

Settings:

The time setting for acceleration or deceleration in PR mode. Refer to P5.020 for details.

P5.023	Acceleration / deceleration time #3		Address: 052EH 052FH
Default:	600	Control mode:	PR
Unit:	ms	Setting range:	1 to 65500
Format:	DEC	Data size:	16-bit
Model:	E3C-L, E3C-L1		

Settings:

The time setting for acceleration or deceleration in PR mode. Refer to P5.020 for details.

P5.024	Acceleration / deceleration time #4		Address: 0530H 0531H
Default:	800	Control mode:	PR
Unit:	ms	Setting range:	1 to 65500
Format:	DEC	Data size:	16-bit
Model:	E3C-L, E3C-L1		

Settings:

The time setting for acceleration or deceleration in PR mode. Refer to P5.020 for details.

P5.025	Acceleration / deceleration time #5		Address: 0532H 0533H
Default:	900	Control mode:	PR
Unit:	ms	Setting range:	1 to 65500
Format:	DEC	Data size:	16-bit
Model:	E3C-L, E3C-L1		

Settings:

The time setting for acceleration or deceleration in PR mode. Refer to P5.020 for details.

P5.026	Acceleration / deceleration time #6		Address: 0534H 0535H
Default:	1000	Control mode:	PR
Unit:	ms	Setting range:	1 to 65500
Format:	DEC	Data size:	16-bit
Model:	E3C-L, E3C-L1		

Settings:

The time setting for acceleration or deceleration in PR mode. Refer to P5.020 for details.

P5.027	Acceleration / deceleration time #7		Address: 0536H 0537H
Default:	1200	Control mode:	PR
Unit:	ms	Setting range:	1 to 65500
Format:	DEC	Data size:	16-bit
Model:	E3C-L, E3C-L1		

Settings:

The time setting for acceleration or deceleration in PR mode. Refer to P5.020 for details.

P5.028	Acceleration / deceleration time #8		Address: 0538H 0539H
Default:	1500	Control mode:	PR
Unit:	ms	Setting range:	1 to 65500
Format:	DEC	Data size:	16-bit
Model:	E3C-L, E3C-L1		

Settings:

The time setting for acceleration or deceleration in PR mode. Refer to P5.020 for details.

P5.029	Acceleration / deceleration time #9		Address: 053AH 053BH
Default:	2000	Control mode:	PR
Unit:	ms	Setting range:	1 to 65500
Format:	DEC	Data size:	16-bit
Model:	E3C-L, E3C-L1		

Settings:

The time setting for acceleration or deceleration in PR mode. Refer to P5.020 for details.

P5.030	Acceleration / deceleration time #10		Address: 053CH 053DH
Default:	2500	Control mode:	PR
Unit:	ms	Setting range:	1 to 65500
Format:	DEC	Data size:	16-bit
Model:	E3C-L, E3C-L1		

Settings:

The time setting for acceleration or deceleration in PR mode. Refer to P5.020 for details.

P5.031	Acceleration / deceleration time #11		Address: 053EH 053FH
Default:	3000	Control mode:	PR
Unit:	ms	Setting range:	1 to 65500
Format:	DEC	Data size:	16-bit
Model:	E3C-L, E3C-L1		

Settings:

The time setting for acceleration or deceleration in PR mode. Refer to P5.020 for details.

P5.032	Acceleration / deceleration time #12		Address: 0540H 0541H
Default:	5000	Control mode:	PR
Unit:	ms	Setting range:	1 to 65500
Format:	DEC	Data size:	16-bit
Model:	E3C-L, E3C-L1		

Settings:

The time setting for acceleration or deceleration in PR mode. Refer to P5.020 for details.

P5.033	Acceleration / deceleration time #13		Address: 0542H 0543H
Default:	8000	Control mode:	PR
Unit:	ms	Setting range:	1 to 65500
Format:	DEC	Data size:	16-bit
Model:	E3C-L, E3C-L1		

Settings:

The time setting for acceleration or deceleration in PR mode. Refer to P5.020 for details.

P5.034	Acceleration / deceleration time #14		Address: 0544H 0545H
Default:	50	Control mode:	PR
Unit:	ms	Setting range:	1 to 1500
Format:	DEC	Data size:	16-bit
Model:	E3C-L, E3C-L1		

Settings:

The deceleration time setting for auto-protection. The default value is small for faster deceleration.

P5.035	Acceleration / deceleration time #15		Address: 0546H 0547H
Default:	30	Control mode:	PR
Unit:	ms	Setting range:	1 to 1200
Format:	DEC	Data size:	16-bit
Model:	E3C-L, E3C-L1		

Settings:

The deceleration time setting for auto-protection. The default value is small for faster deceleration.

P5.036 - P5.039	Reserved

P5.040	Delay time #0 after position reached		Address: 0550H 0551H
Default:	0	Control mode:	PR
Unit:	ms	Setting range:	0 to 32767
Format:	DEC	Data size:	16-bit
Model:	E3C-L, E3C-L1		

Settings:

There are 16 sets of delay time (#0 - 15) in PR mode. This parameter is the delay time #0 in PR mode.

P5.041	Delay time #1 after position reached		Address: 0552H 0553H
Default:	100	Control mode:	PR
Unit:	ms	Setting range:	0 to 32767
Format:	DEC	Data size:	16-bit
Model:	E3C-L, E3C-L1		

Settings:

Delay time #1 in PR mode.

P5.042	Delay time #2 after position reached		Address: 0554H 0555H
Default:	200	Control mode:	PR
Unit:	ms	Setting range:	0 to 32767
Format:	DEC	Data size:	16-bit
Model:	E3C-L, E3C-L1		

Settings:

Delay time #2 in PR mode.

P5.043	Delay time #3 after position reached		Address: 0556H 0557H
Default:	400	Control mode:	PR
Unit:	ms	Setting range:	0 to 32767
Format:	DEC	Data size:	16-bit
Model:	E3C-L, E3C-L1		

Settings:

Delay time #3 in PR mode.

P5.044	Delay time #4 after position reached		Address: 0558H 0559H
Default:	500	Control mode:	PR
Unit:	ms	Setting range:	0 to 32767
Format:	DEC	Data size:	16-bit
Model:	E3C-L, E3C-L1		

Settings:

Delay time #4 in PR mode.

P5.045	Delay time #5 after position reached		Address: 055AH 055BH
Default:	800	Control mode:	PR
Unit:	ms	Setting range:	0 to 32767
Format:	DEC	Data size:	16-bit
Model:	E3C-L, E3C-L1		

Settings:

Delay time #5 in PR mode.

P5.046	Delay time #6 after position reached		Address: 055CH 055DH
Default:	1000	Control mode:	PR
Unit:	ms	Setting range:	0 to 32767
Format:	DEC	Data size:	16-bit
Model:	E3C-L, E3C-L1		

Settings:

Delay time #6 in PR mode.

P5.047	Delay time #7 after position reached		Address: 055EH 055FH
Default:	1500	Control mode:	PR
Unit:	ms	Setting range:	0 to 32767
Format:	DEC	Data size:	16-bit
Model:	E3C-L, E3C-L1		

Settings:

Delay time #7 in PR mode.

P5.048	Delay time #8 after position reached		Address: 0560H 0561H
Default:	2000	Control mode:	PR
Unit:	ms	Setting range:	0 to 32767
Format:	DEC	Data size:	16-bit
Model:	E3C-L, E3C-L1		

Settings:

Delay time #8 in PR mode.

P5.049	Delay time #9 after position reached		Address: 0562H 0563H
Default:	2500	Control mode:	PR
Unit:	ms	Setting range:	0 to 32767
Format:	DEC	Data size:	16-bit
Model:	E3C-L, E3C-L1		

Settings:

Delay time #9 in PR mode.

P5.050	Delay time #10 after position reached		Address: 0564H 0565H
Default:	3000	Control mode:	PR
Unit:	ms	Setting range:	0 to 32767
Format:	DEC	Data size:	16-bit
Model:	E3C-L, E3C-L1		

Settings:

Delay time #10 in PR mode.

P5.051	Delay time #11 after position reached		Address: 0566H 0567H
Default:	3500	Control mode:	PR
Unit:	ms	Setting range:	0 to 32767
Format:	DEC	Data size:	16-bit
Model:	E3C-L, E3C-L1		

Settings:

Delay time #11 in PR mode.

P5.052	Delay time #12 after position reached		Address: 0568H 0569H
Default:	4000	Control mode:	PR
Unit:	ms	Setting range:	0 to 32767
Format:	DEC	Data size:	16-bit
Model:	E3C-L, E3C-L1		

Settings:

Delay time #12 in PR mode.

P5.053	Delay time #13 after position reached		Address: 056AH 056BH
Default:	4500	Control mode:	PR
Unit:	ms	Setting range:	0 to 32767
Format:	DEC	Data size:	16-bit
Model:	E3C-L, E3C-L1		

Settings:

Delay time #13 in PR mode.

P5.054	Delay time #14 after position reached		Address: 056CH 056DH
Default:	5000	Control mode:	PR
Unit:	ms	Setting range:	0 to 32767
Format:	DEC	Data size:	16-bit
Model:	E3C-L, E3C-L1		

Settings:

Delay time #14 in PR mode.

P5.055	Delay time #15 after position reached		Address: 056EH 056FH
Default:	5500	Control mode:	PR
Unit:	ms	Setting range:	0 to 32767
Format:	DEC	Data size:	16-bit
Model:	E3C-L, E3C-L1		

Settings:

Delay time #15 in PR mode.

P5.056 - P5.059	Reserved

P5.060	Target speed setting #0			Address: 0578H 0579H
Operation interface:	Panel / software	Communication	Control mode:	PR
Default:	20.0	200	Data size:	32-bit
Unit:	1 rpm	0.1 rpm	-	-
Setting range:	0.0 to 7500.0	0 to 75000	-	-
Format:	DEC	DEC	-	-
Model:	E3C-L, E3C-L1			

Settings:

Target speed #0 in PR mode.

P5.061	Target speed setting #1			Address: 057AH 057BH
Operation interface:	Panel / software	Communication	Control mode:	PR
Default:	50.0	500	Data size:	32-bit
Unit:	1 rpm	0.1 rpm	-	-
Setting range:	0.0 to 7500.0	0 to 75000	-	-
Format:	DEC	DEC	-	-
Model:	E3C-L, E3C-L1			

Settings:

Target speed #1 in PR mode.

P5.062	Target speed setting #2			Address: 057CH 057DH
Operation interface:	Panel / software	Communication	Control mode:	PR
Default:	100.0	1000	Data size:	32-bit
Unit:	1 rpm	0.1 rpm	-	-
Setting range:	0.0 to 7500.0	0 to 75000	-	-
Format:	DEC	DEC	-	-
Model:	E3C-L, E3C-L1			

Settings:

Target speed #2 in PR mode.

P5.063	Target speed setting #3			Address: 057EH 057FH
Operation interface:	Panel / software	Communication	Control mode:	PR
Default:	200.0	2000	Data size:	32-bit
Unit:	1 rpm	0.1 rpm	-	-
Setting range:	0.0 to 7500.0	0 to 75000	-	-
Format:	DEC	DEC	-	-
Model:	E3C-L, E3C-L1			

Settings:

Target speed #3 in PR mode.

P5.064	Target speed setting #4			Address: 0580H 0581H
Operation interface:	Panel / software	Communication	Control mode:	PR
Default:	300.0	3000	Data size:	32-bit
Unit:	1 rpm	0.1 rpm	-	-
Setting range:	0.0 to 7500.0	0 to 75000	-	-
Format:	DEC	DEC	-	-
Model:	E3C-L, E3C-L1			

Settings:

Target speed #4 in PR mode.

P5.065	Target speed setting #5			Address: 0582H 0583H
Operation interface:	Panel / software	Communication	Control mode:	PR
Default:	500.0	5000	Data size:	32-bit
Unit:	1 rpm	0.1 rpm	-	-
Setting range:	0.0 to 7500.0	0 to 75000	-	-
Format:	DEC	DEC	-	-
Model:	E3C-L, E3C-L1			

Settings:

Target speed #5 in PR mode.

P5.066	Target speed setting #6			Address: 0584H 0585H
Operation interface:	Panel / software	Communication	Control mode:	PR
Default:	600.0	6000	Data size:	32-bit
Unit:	1 rpm	0.1 rpm	-	-
Setting range:	0.0 to 7500.0	0 to 75000	-	-
Format:	DEC	DEC	-	-
Model:	E3C-L, E3C-L1			

Settings:

Target speed #6 in PR mode.

P5.067	Target speed setting #7			Address: 0586H 0587H
Operation interface:	Panel / software	Communication	Control mode:	PR
Default:	800.0	8000	Data size:	32-bit
Unit:	1 rpm	0.1 rpm	-	-
Setting range:	0.0 to 7500.0	0 to 75000	-	-
Format:	DEC	DEC	-	-
Model:	E3C-L, E3C-L1			

Settings:

Target speed #7 in PR mode.

P5.068	Target speed setting #8			Address: 0588H 0589H
Operation interface:	Panel / software	Communication	Control mode:	PR
Default:	1000.0	10000	Data size:	32-bit
Unit:	1 rpm	0.1 rpm	-	-
Setting range:	0.0 to 7500.0	0 to 75000	-	-
Format:	DEC	DEC	-	-
Model:	E3C-L, E3C-L1			

Settings:

Target speed #8 in PR mode.

P5.069	Target speed setting #9			Address: 058AH 058BH
Operation interface:	Panel / software	Communication	Control mode:	PR
Default:	1300.0	13000	Data size:	32-bit
Unit:	1 rpm	0.1 rpm	-	-
Setting range:	0.0 to 7500.0	0 to 75000	-	-
Format:	DEC	DEC	-	-
Model:	E3C-L, E3C-L1			

Settings:

Target speed #9 in PR mode.

P5.070	Target speed setting #10			Address: 058CH 058DH
Operation interface:	Panel / software	Communication	Control mode:	PR
Default:	1500.0	15000	Data size:	32-bit
Unit:	1 rpm	0.1 rpm	-	-
Setting range:	0.0 to 7500.0	0 to 75000	-	-
Format:	DEC	DEC	-	-
Model:	E3C-L, E3C-L1			

Settings:

Target speed #10 in PR mode.

P5.071	Target speed setting #11			Address: 058EH 058FH
Operation interface:	Panel / software	Communication	Control mode:	PR
Default:	1800.0	18000	Data size:	32-bit
Unit:	1 rpm	0.1 rpm	-	-
Setting range:	0.0 to 7500.0	0 to 75000	-	-
Format:	DEC	DEC	-	-
Model:	E3C-L, E3C-L1			

Settings:

Target speed #11 in PR mode.

P5.072	Target speed setting #12			Address: 0590H 0591H
Operation interface:	Panel / software	Communication	Control mode:	PR
Default:	2000.0	20000	Data size:	32-bit
Unit:	1 rpm	0.1 rpm	-	-
Setting range:	0.0 to 7500.0	0 to 75000	-	-
Format:	DEC	DEC	-	-
Model:	E3C-L, E3C-L1			

Settings:

Target speed #12 in PR mode.

P5.073	Target speed setting #13			Address: 0592H 0593H
Operation interface:	Panel / software	Communication	Control mode:	PR
Default:	2300.0	23000	Data size:	32-bit
Unit:	1 rpm	0.1 rpm	-	-
Setting range:	0.0 to 7500.0	0 to 75000	-	-
Format:	DEC	DEC	-	-
Model:	E3C-L, E3C-L1			

Settings:

Target speed #13 in PR mode.

P5.074	Target speed setting #14			Address: 0594H 0595H
Operation interface:	Panel / software	Communication	Control mode:	PR
Default:	2500.0	25000	Data size:	32-bit
Unit:	1 rpm	0.1 rpm	-	-
Setting range:	0.0 to 7500.0	0 to 75000	-	-
Format:	DEC	DEC	-	-
Model:	E3C-L, E3C-L1			

Settings:

Target speed #14 in PR mode.

P5.075	Target speed setting #15			Address: 0596H 0597H
Operation interface:	Panel / software	Communication	Control mode:	PR
Default:	3000.0	30000	Data size:	32-bit
Unit:	1 rpm	0.1 rpm	-	-
Setting range:	0.0 to 7500.0	0 to 75000	-	-
Format:	DEC	DEC	-	-
Model:	E3C-L, E3C-L1			

Settings:

Target speed #15 in PR mode.

P5.076 - P5.092	Reserved

P5.093	Motion control macro command: command parameter #4		Address: 05BAH 05BBH
Default:	0x00000000	Control mode:	All
Unit:	-	Setting range:	0x00000000 to 0xFFFFFFFF
Format:	HEX	Data size:	32-bit
Model:	E3C-L, E3C-L1		

Settings:

Before issuing the macro command, set the relevant parameters in advance. The function of the parameter is determined by the macro command code. Not every macro command requires this parameter.

P5.094	Motion control macro command: command parameter #3		Address: 05BCH 05BDH
Default:	0	Control mode:	All
Unit:	-	Setting range:	-2147483648 to +2147483647
Format:	DEC	Data size:	32-bit
Model:	E3C-L, E3C-L1		

Settings:

Before issuing the macro command, set the relevant parameters in advance. The function of the parameter is determined by the macro command code. Not every macro command requires this parameter.

P5.095	Motion control macro command: command parameter #2		Address: 05BEH 05BFH
Default:	0	Control mode:	All
Unit:	-	Setting range:	-2147483648 to +2147483647
Format:	DEC	Data size:	32-bit
Model:	E3C-L, E3C-L1		

Settings:

Before issuing the macro command, set the relevant parameters in advance. The function of the parameter is determined by the macro command code. Not every macro command requires this parameter.

P5.096	Motion control macro command: command parameter #1		Address: 05C0H 05C1H
Default:	0	Control mode:	All
Unit:	-	Setting range:	-2147483648 to +2147483647
Format:	DEC	Data size:	32-bit
Model:	E3C-L, E3C-L1		

Settings:

Before issuing the macro command, set the relevant parameters in advance. The function of the parameter is determined by the macro command code. Not every macro command requires this parameter.

P5.097■	Motion control macro command: issuing command / reading execution result		Address: 05C2H 05C3H
Default:	0x0000	Control mode:	All
Unit:	-	Setting range:	0x0000 to 0x099F
Format:	HEX	Data size:	16-bit
Model:	E3C-L, E3C-L1		

Settings:

Write to this parameter to issue a macro command; read this parameter to examine the execution result of a macro command.

When you write the command code 0x0003 to this parameter, 0x1003 is returned if successful; and 0xF03X if unsuccessful (depending on the command description). If you issue a command that is not supported, the failure code 0xF001 is returned.

The command codes are listed in the following tables:

Command code 0x0003	**Parameter and data array protection: password setting, protection activation**
	This function can only be executed prior to activating the parameter protection function. When the protection function is activated, the failure code is returned if this function is executed repeatedly.
Macro parameters	P5.093 = parameter groups 5, 6, 7 (P5 - P7) write protection 0: disabled 1: enabled P5.094 = read protection range of parameter and data array (-1 to +7) -1: parameter groups 5, 6, 7 (P5 - P7) and data array are readable 0: parameter groups 5, 6, 7 (P5 - P7) and data array are unreadable 1: parameter groups 5, 6, 7 (P5 - P7) and data array #100 - 799 are unreadable 2: parameter groups 5, 6, 7 (P5 - P7) and data array #200 - 799 are unreadable 3: parameter groups 5, 6, 7 (P5 - P7) and data array #300 - 799 are unreadable 4: parameter groups 5, 6, 7 (P5 - P7) and data array #400 - 799 are unreadable 5: parameter groups 5, 6, 7 (P5 - P7) and data array #500 - 799 are unreadable 6: parameter groups 5, 6, 7 (P5 - P7) and data array #600 - 799 are unreadable 7: parameter groups 5, 6, 7 (P5 - P7) are unreadable, but data array is readable P5.095 = set new password (1 - 16777215) P5.096 = confirm new password (1 - 16777215)
Read the return value of P5.097 after executing the macro	Success code
	0x1003
	Failure code
	0xF031: protection function is activated and cannot be set repeatedly
	0xF032: wrong password setting; P5.095 does not equal P5.096
	0xF033: password value exceeds the allowable range (1 - 16777215)
	0xF034: protection range P5.094 exceeds the allowable range (-1 to +7)
	0xF035: protection level P5.093 exceeds the allowable range (0 - 1)

8

Command code 0x0004	**Parameter and data array protection: unlock protection** This function can only be executed when the protection function is activated. When the protection function is unlocked, the failure code is returned if this function is executed repeatedly. If the wrong password is entered, failure code 0xEnnn is returned. nnn indicates the remaining attempts to enter the password. The number decrements by 1 after each failed attempt. When the number displays 0, it indicates the maximum number of failed password attempts has been reached and this function is disabled. You can only reset P0 - P7 parameters (P2.008 = 10) to unlock.
Macro parameter	P5.096 = enter password (1 - 16777215)
Read the return value of P5.097 after executing the macro	Success code
	0x1004
	Failure code
	0xF041: protection function is unlocked and cannot be unlocked repeatedly
	0xF043: password value exceeds the allowable range (1 - 16777215)
	0xF044: the maximum number of failed password attempts has been reached and it is locked. You can only unlock by resetting the parameters (P2.008 = 10), but this also resets all parameters to the default values.
	0xEnnn: incorrect password setting; failed to unlock nnn: remaining attempts to enter the password. The number decrements by 1 after each failed attempt. When the number displays 0, the function is disabled and does not allow further attempts.

P5.098	**PR path triggered by event rising-edge**		**Address: 05C4H 05C5H**
Default:	0x0000	Control mode:	PR
Unit:	-	Setting range:	0x0000 to 0xDDDD
Format:	HEX	Data size:	16-bit
Model:	E3C-L, E3C-L1		

Settings:



X	The action when DI.EV1 is rising-edge triggered	Z	The action when DI.EV3 is rising-edge triggered
Y	The action when DI.EV2 is rising-edge triggered	U	The action when DI.EV4 is rising-edge triggered

- X: the action when DI.EV1 is rising-edge triggered

  0: no action

  1 - D: execute PR#51 - 63

- Y: the action when DI.EV2 is rising-edge triggered

  0: no action

  1 - D: execute PR#51 - 63

- Z: the action when DI.EV3 is rising-edge triggered

  0: no action

  1 - D: execute PR#51 - 63

- U: the action when DI.EV4 is rising-edge triggered

  0: no action

  1 - D: execute PR#51 - 63

P5.099	PR path triggered by event falling-edge		Address: 05C6H 05C7H
Default:	0x0000	Control mode:	PR
Unit:	-	Setting range:	0x0000 to 0xDDDD
Format:	HEX	Data size:	16-bit
Model:	E3C-L, E3C-L1		

Settings:



X	The action when DI.EV1 is falling-edge triggered	Z	The action when DI.EV3 is falling-edge triggered
Y	The action when DI.EV2 is falling-edge triggered	U	The action when DI.EV4 is falling-edge triggered

- X: the action when DI.EV1 is falling-edge triggered

  0: no action

  1 - D: execute PR#51 - 63

- Y: the action when DI.EV2 is falling-edge triggered

  0: no action

  1 - D: execute PR#51 - 63

- Z: the action when DI.EV3 is falling-edge triggered

  0: no action

  1 - D: execute PR#51 - 63

- U: the action when DI.EV4 is falling-edge triggered

  0: no action

  1 - D: execute PR#51 - 63

P6.xxx PR parameters

P6.000	Homing definition		Address: 0600H 0601H
Default:	0x00000000	Control mode:	PR
Unit:	-	Setting range:	0x00000000 to 0xFFFFFF3F
Format:	HEX	Data size:	32-bit
Model:	E3C-L, E3C-L1		

Settings:

High word



D C B A

Low word



U Z YX

A	DEC2: deceleration time selection for second homing	YX	PATH: path type
B	DLY: delay time selection	Z	ACC: acceleration time selection
C	Reserved	U	DEC1: deceleration time selection for first homing
D	BOOT: whether to execute homing automatically when the drive is powered on	-	-

- YX: PATH: path type

  0x00: Stop: the servo stops after homing is complete

  0x01 - 0x3F: AUTO: the servo executes the specified path (PR#01 - PR#63) after homing is complete

- Z: ACC: acceleration time selection

  0 - F: correspond to P5.020 - P5.035

- U: DEC1: deceleration time selection for first homing

  0 - F: correspond to P5.020 - P5.035

- A: DEC2: deceleration time selection for second homing

  0 - F: correspond to P5.020 - P5.035

- B: DLY: delay time selection

  0 - F: correspond to P5.040 - P5.055

- D: BOOT: whether to execute homing automatically when the drive is powered on

  0: do not execute homing

  1: execute homing automatically (servo switches to On for the first time after power is applied)

Apart from the preceding definitions, the related settings for homing also include:

1. P5.004: homing methods.
2. P5.005 - P5.006: speed settings for homing.
3. P6.001: the origin definition (ORG_DEF) is the position of the origin and is not necessarily 0. This function is used as a traversal of the position system.

Note:

1. After finding the origin (sensor or Z), the servo has to decelerate to a stop. The stop position exceeds the origin by a short distance:
   If returning to the origin is not needed, set PATH = 0x00.
   If returning to the origin is needed, set PATH = 0x01 - 0x3F and set the route as PABS = ORG_DEF.
   Example: when P6.000 = 0x0001, the servo automatically executes PR#01 after homing is complete.
   Set the route of PR#01 (setting P6.002 & P6.003) as moving to the absolute position of 0.
2. If the origin (sensor or Z) is found and you want the servo to move an offset S and define the position after moving as P, then set PATH = non-zero and set ORG_DEF = P - S, and this absolute Position command = P.

P6.001	Origin definition		Address: 0602H 0603H
Default:	0	Control mode:	PR
Unit:	-	Setting range:	-2147483648 to +2147483647
Format:	DEC	Data size:	32-bit
Model:	E3C-L, E3C-L1		

Settings:

Origin definition.

P6.002	PATH 1 definition		Address: 0604H 0605H
Default:	0x00000000	Control mode:	PR
Unit:	-	Setting range:	0x00000000 to 0xFFFFFFFF
Format:	HEX	Data size:	32-bit
Model:	E3C-L, E3C-L1		

Settings:

High word



D C B A

Low word



U Z Y X

A	SPD, Target speed[Note]	X	TYPE, Path type
B	DLY, Delay time	Y	OPT, Option
C	AUTO[Note]	Z	ACC, Acceleration time[Note]
D	Reserved	U	DEC, Deceleration time[Note]

The digit definitions are as follows:

■ YX

Y: OPT, Option				X: TYPE, Path type
Bit 7	Bit 6	Bit 5	Bit 4	
-	UNIT	AUTO	INS	1: SPEED, constant speed control.
CMD		OVLP	INS	2: SINGLE, positioning control. It stops when finished.
				3: AUTO, positioning control. It automatically loads the next path when finished.
-	-	-	INS	7: JUMP, jump to the specified path.
-	ROM	AUTO	INS	8: WRITE, write specified parameter to specified path.
DIR		OVLP	INS	A: INDEX, rotary axis position control.

TYPE: when path type 1, 2, or 3 is executed, the motor operation can be interrupted and stopped by DI.STP and software limits.

INS: interrupts the previous path when the current path is executed.

OVLP: allow overlapping of the next path. Overlapping is not allowed in Speed mode. When you set an Overlap function in Position mode, DLY has no function.

AUTO: once the current PR path is finished, automatically load the next path.

CMD, DIR, ROM, and UNIT: refer to Section 7.1.3 Motion Control commands.

8

■ UZ

U: DEC, Deceleration time	Z: ACC, Acceleration time	Corresponding parameter	Default value (ms)
0	0	P5.020	200
1	1	P5.021	300
2	2	P5.022	500
3	3	P5.023	600
4	4	P5.024	800
5	5	P5.025	900
6	6	P5.026	1000
7	7	P5.027	1200
8	8	P5.028	1500
9	9	P5.029	2000
A	A	P5.030	2500
B	B	P5.031	3000
C	C	P5.032	5000
D	D	P5.033	8000
E	E	P5.034	50
F	F	P5.035	30

■ A: SPD, target speed

A	Corresponding parameter	Default value (rpm)
0	P5.060	20
1	P5.061	50
2	P5.062	100
3	P5.063	200
4	P5.064	300
5	P5.065	500
6	P5.066	600
7	P5.067	800
8	P5.068	1000
9	P5.069	1300
A	P5.070	1500
B	P5.071	1800
C	P5.072	2000
D	P5.073	2300
E	P5.074	2500
F	P5.075	3000

■ B: DLY, delay time

B	Corresponding parameter	Default value (ms)
0	P5.040	0
1	P5.041	100
2	P5.042	200
3	P5.043	400
4	P5.044	500
5	P5.045	800
6	P5.046	1000
7	P5.047	1500
8	P5.048	2000
9	P5.049	2500
A	P5.050	3000
B	P5.051	3500
C	P5.052	4000
D	P5.053	4500
E	P5.054	5000
F	P5.055	5500

■ C: AUTO: once the current PR path is finished, automatically load the next path.

This function is enabled only when P6.002.X = A (rotary axis position control).

Bit	Function	Description
Bit 24 - Bit 25	Reserved	-
Bit 26	AUTO	0: disable auto function. 1: once the current PR path is finished, automatically load the next path.
Bit 27	Reserved	-

Note: the definitions of digits C, A, U, Z are different from those in the preceding tables when the path type is 8 (write specified parameter to specified path). Refer to Chapter 7 for detailed instructions.

P6.003	**PATH 1 data**		**Address: 0606H 0607H**
Default:	0	Control mode:	PR
Unit:	-	Setting range:	-2147483648 to +2147483647
Format:	DEC	Data size:	32-bit
Model:	E3C-L, E3C-L1		

Settings:

P6.002 defines the property of the target point and P6.003 defines the target position of P6.002 or the target path for the Jump command.

P6.004	**PATH 2 definition**		**Address: 0608H 0609H**
Default:	0x00000000	Control mode:	PR
Unit:	-	Setting range:	0x00000000 to 0xFFFFFFFF
Format:	HEX	Data size:	32-bit
Model:	E3C-L, E3C-L1		

Settings:

Refer to the description of P6.002.

P6.005	PATH 2 data		Address: 060AH 060BH
Default:	0	Control mode:	PR
Unit:	-	Setting range:	-2147483648 to +2147483647
Format:	DEC	Data size:	32-bit
Model:	E3C-L, E3C-L1		

Settings:

Refer to the description of P6.003.

P6.006	PATH 3 definition		Address: 060CH 060DH
Default:	0x00000000	Control mode:	PR
Unit:	-	Setting range:	0x00000000 to 0xFFFFFFFF
Format:	HEX	Data size:	32-bit
Model:	E3C-L, E3C-L1		

Settings:

Refer to the description of P6.002.

P6.007	PATH 3 data		Address: 060EH 060FH
Default:	0	Control mode:	PR
Unit:	-	Setting range:	-2147483648 to +2147483647
Format:	DEC	Data size:	32-bit
Model:	E3C-L, E3C-L1		

Settings:

Refer to the description of P6.003.

P6.008	PATH 4 definition		Address: 0610H 0611H
Default:	0x00000000	Control mode:	PR
Unit:	-	Setting range:	0x00000000 to 0xFFFFFFFF
Format:	HEX	Data size:	32-bit
Model:	E3C-L, E3C-L1		

Settings:

Refer to the description of P6.002.

P6.009	PATH 4 data		Address: 0612H 0613H
Default:	0	Control mode:	PR
Unit:	-	Setting range:	-2147483648 to +2147483647
Format:	DEC	Data size:	32-bit
Model:	E3C-L, E3C-L1		

Settings:

Refer to the description of P6.003.

P6.010	PATH 5 definition		Address: 0614H 0615H
Default:	0x00000000	Control mode:	PR
Unit:	-	Setting range:	0x00000000 to 0xFFFFFFFF
Format:	HEX	Data size:	32-bit
Model:	E3C-L, E3C-L1		

Settings:

Refer to the description of P6.002.

P6.011	PATH 5 data		Address: 0616H 0617H
Default:	0	Control mode:	PR
Unit:	-	Setting range:	-2147483648 to +2147483647
Format:	DEC	Data size:	32-bit
Model:	E3C-L, E3C-L1		

Settings:

Refer to the description of P6.003.

P6.012	PATH 6 definition		Address: 0618H 0619H
Default:	0x00000000	Control mode:	PR
Unit:	-	Setting range:	0x00000000 to 0xFFFFFFFF
Format:	HEX	Data size:	32-bit
Model:	E3C-L, E3C-L1		

Settings:

Refer to the description of P6.002.

P6.013	PATH 6 data		Address: 061AH 061BH
Default:	0	Control mode:	PR
Unit:	-	Setting range:	-2147483648 to +2147483647
Format:	DEC	Data size:	32-bit
Model:	E3C-L, E3C-L1		

Settings:

Refer to the description of P6.003.

P6.014	PATH 7 definition		Address: 061CH 061DH
Default:	0x00000000	Control mode:	PR
Unit:	-	Setting range:	0x00000000 to 0xFFFFFFFF
Format:	HEX	Data size:	32-bit
Model:	E3C-L, E3C-L1		

Settings:

Refer to the description of P6.002.

P6.015	PATH 7 data		Address: 061EH 061FH
Default:	0	Control mode:	PR
Unit:	-	Setting range:	-2147483648 to +2147483647
Format:	DEC	Data size:	32-bit
Model:	E3C-L, E3C-L1		

Settings:

Refer to the description of P6.003.

P6.016	PATH 8 definition		Address: 0620H 0621H
Default:	0x00000000	Control mode:	PR
Unit:	-	Setting range:	0x00000000 to 0xFFFFFFFF
Format:	HEX	Data size:	32-bit
Model:	E3C-L, E3C-L1		

Settings:

Refer to the description of P6.002.

P6.017	PATH 8 data		Address: 0622H 0623H
Default:	0	Control mode:	PR
Unit:	-	Setting range:	-2147483648 to +2147483647
Format:	DEC	Data size:	32-bit
Model:	E3C-L, E3C-L1		

Settings:

Refer to the description of P6.003.

P6.018	PATH 9 definition		Address: 0624H 0625H
Default:	0x00000000	Control mode:	PR
Unit:	-	Setting range:	0x00000000 to 0xFFFFFFFF
Format:	HEX	Data size:	32-bit
Model:	E3C-L, E3C-L1		

Settings:

Refer to the description of P6.002.

P6.019	PATH 9 data		Address: 0626H 0627H
Default:	0	Control mode:	PR
Unit:	-	Setting range:	-2147483648 to +2147483647
Format:	DEC	Data size:	32-bit
Model:	E3C-L, E3C-L1		

Settings:

Refer to the description of P6.003.

P6.020	PATH 10 definition		Address: 0628H 0629H
Default:	0x00000000	Control mode:	PR
Unit:	-	Setting range:	0x00000000 to 0xFFFFFFFF
Format:	HEX	Data size:	32-bit
Model:	E3C-L, E3C-L1		

Settings:

Refer to the description of P6.002.

P6.021	PATH 10 data		Address: 062AH 062BH
Default:	0	Control mode:	PR
Unit:	-	Setting range:	-2147483648 to +2147483647
Format:	DEC	Data size:	32-bit
Model:	E3C-L, E3C-L1		

Settings:

Refer to the description of P6.003.

P6.022	PATH 11 definition		Address: 062CH 062DH
Default:	0x00000000	Control mode:	PR
Unit:	-	Setting range:	0x00000000 to 0xFFFFFFFF
Format:	HEX	Data size:	32-bit
Model:	E3C-L, E3C-L1		

Settings:

Refer to the description of P6.002.

P6.023	PATH 11 data		Address: 062EH 062FH
Default:	0	Control mode:	PR
Unit:	-	Setting range:	-2147483648 to +2147483647
Format:	DEC	Data size:	32-bit
Model:	E3C-L, E3C-L1		

Settings:

Refer to the description of P6.003.

P6.024	PATH 12 definition		Address: 0630H 0631H
Default:	0x00000000	Control mode:	PR
Unit:	-	Setting range:	0x00000000 to 0xFFFFFFFF
Format:	HEX	Data size:	32-bit
Model:	E3C-L, E3C-L1		

Settings:

Refer to the description of P6.002.

P6.025	PATH 12 data		Address: 0632H 0633H
Default:	0	Control mode:	PR
Unit:	-	Setting range:	-2147483648 to +2147483647
Format:	DEC	Data size:	32-bit
Model:	E3C-L, E3C-L1		

Settings:

Refer to the description of P6.003.

P6.026	PATH 13 definition		Address: 0634H 0635H
Default:	0x00000000	Control mode:	PR
Unit:	-	Setting range:	0x00000000 to 0xFFFFFFFF
Format:	HEX	Data size:	32-bit
Model:	E3C-L, E3C-L1		

Settings:

Refer to the description of P6.002.

P6.027	PATH 13 data		Address: 0636H 0637H
Default:	0	Control mode:	PR
Unit:	-	Setting range:	-2147483648 to +2147483647
Format:	DEC	Data size:	32-bit
Model:	E3C-L, E3C-L1		

Settings:

Refer to the description of P6.003.

P6.028	PATH 14 definition		Address: 0638H 0639H
Default:	0x00000000	Control mode:	PR
Unit:	-	Setting range:	0x00000000 to 0xFFFFFFFF
Format:	HEX	Data size:	32-bit
Model:	E3C-L, E3C-L1		

Settings:

Refer to the description of P6.002.

P6.029	PATH 14 data		Address: 063AH 063BH
Default:	0	Control mode:	PR
Unit:	-	Setting range:	-2147483648 to +2147483647
Format:	DEC	Data size:	32-bit
Model:	E3C-L, E3C-L1		

Settings:

Refer to the description of P6.003.

P6.030	PATH 15 definition		Address: 063CH 063DH
Default:	0x00000000	Control mode:	PR
Unit:	-	Setting range:	0x00000000 to 0xFFFFFFFF
Format:	HEX	Data size:	32-bit
Model:	E3C-L, E3C-L1		

Settings:

Refer to the description of P6.002.

P6.031	PATH 15 data		Address: 063EH 063FH
Default:	0	Control mode:	PR
Unit:	-	Setting range:	-2147483648 to +2147483647
Format:	DEC	Data size:	32-bit
Model:	E3C-L, E3C-L1		

Settings:

Refer to the description of P6.003.

P6.032	PATH 16 definition		Address: 0640H 0641H
Default:	0x00000000	Control mode:	PR
Unit:	-	Setting range:	0x00000000 to 0xFFFFFFFF
Format:	HEX	Data size:	32-bit
Model:	E3C-L, E3C-L1		

Settings:

Refer to the description of P6.002.

P6.033	PATH 16 data		Address: 0642H 0643H
Default:	0	Control mode:	PR
Unit:	-	Setting range:	-2147483648 to +2147483647
Format:	DEC	Data size:	32-bit
Model:	E3C-L, E3C-L1		

Settings:

Refer to the description of P6.003.

P6.034	PATH 17 definition		Address: 0644H 0645H
Default:	0x00000000	Control mode:	PR
Unit:	-	Setting range:	0x00000000 to 0xFFFFFFFF
Format:	HEX	Data size:	32-bit
Model:	E3C-L, E3C-L1		

Settings:

Refer to the description of P6.002.

P6.035	PATH 17 data		Address: 0646H 0647H
Default:	0	Control mode:	PR
Unit:	-	Setting range:	-2147483648 to +2147483647
Format:	DEC	Data size:	32-bit
Model:	E3C-L, E3C-L1		

Settings:

Refer to the description of P6.003.

P6.036	PATH 18 definition		Address: 0648H 0649H
Default:	0x00000000	Control mode:	PR
Unit:	-	Setting range:	0x00000000 to 0xFFFFFFFF
Format:	HEX	Data size:	32-bit
Model:	E3C-L, E3C-L1		

Settings:

Refer to the description of P6.002.

P6.037	PATH 18 data		Address: 064AH 064BH
Default:	0	Control mode:	PR
Unit:	-	Setting range:	-2147483648 to +2147483647
Format:	DEC	Data size:	32-bit
Model:	E3C-L, E3C-L1		

Settings:

Refer to the description of P6.003.

P6.038	PATH 19 definition		Address: 064CH 064DH
Default:	0x00000000	Control mode:	PR
Unit:	-	Setting range:	0x00000000 to 0xFFFFFFFF
Format:	HEX	Data size:	32-bit
Model:	E3C-L, E3C-L1		

Settings:

Refer to the description of P6.002.

P6.039	PATH 19 data		Address: 064EH 064FH
Default:	0	Control mode:	PR
Unit:	-	Setting range:	-2147483648 to +2147483647
Format:	DEC	Data size:	32-bit
Model:	E3C-L, E3C-L1		

Settings:

Refer to the description of P6.003.

P6.040	PATH 20 definition		Address: 0650H 0651H
Default:	0x00000000	Control mode:	PR
Unit:	-	Setting range:	0x00000000 to 0xFFFFFFFF
Format:	HEX	Data size:	32-bit
Model:	E3C-L, E3C-L1		

Settings:

Refer to the description of P6.002.

P6.041	PATH 20 data		Address: 0652H 0653H
Default:	0	Control mode:	PR
Unit:	-	Setting range:	-2147483648 to +2147483647
Format:	DEC	Data size:	32-bit
Model:	E3C-L, E3C-L1		

Settings:

Refer to the description of P6.003.

P6.042	PATH 21 definition		Address: 0654H 0655H
Default:	0x00000000	Control mode:	PR
Unit:	-	Setting range:	0x00000000 to 0xFFFFFFFF
Format:	HEX	Data size:	32-bit
Model:	E3C-L, E3C-L1		

Settings:

Refer to the description of P6.002.

P6.043	PATH 21 data		Address: 0656H 0657H
Default:	0	Control mode:	PR
Unit:	-	Setting range:	-2147483648 to +2147483647
Format:	DEC	Data size:	32-bit
Model:	E3C-L, E3C-L1		

Settings:

Refer to the description of P6.003.

P6.044	PATH 22 definition		Address: 0658H 0659H
Default:	0x00000000	Control mode:	PR
Unit:	-	Setting range:	0x00000000 to 0xFFFFFFFF
Format:	HEX	Data size:	32-bit
Model:	E3C-L, E3C-L1		

Settings:

Refer to the description of P6.002.

P6.045	PATH 22 data		Address: 065AH 065BH
Default:	0	Control mode:	PR
Unit:	-	Setting range:	-2147483648 to +2147483647
Format:	DEC	Data size:	32-bit
Model:	E3C-L, E3C-L1		

Settings:

Refer to the description of P6.003.

P6.046	PATH 23 definition		Address: 065CH 065DH
Default:	0x00000000	Control mode:	PR
Unit:	-	Setting range:	0x00000000 to 0xFFFFFFFF
Format:	HEX	Data size:	32-bit
Model:	E3C-L, E3C-L1		

Settings:

Refer to the description of P6.002.

P6.047	PATH 23 data		Address: 065EH 065FH
Default:	0	Control mode:	PR
Unit:	-	Setting range:	-2147483648 to +2147483647
Format:	DEC	Data size:	32-bit
Model:	E3C-L, E3C-L1		

Settings:

Refer to the description of P6.003.

P6.048	PATH 24 definition		Address: 0660H 0661H
Default:	0x00000000	Control mode:	PR
Unit:	-	Setting range:	0x00000000 to 0xFFFFFFFF
Format:	HEX	Data size:	32-bit
Model:	E3C-L, E3C-L1		

Settings:

Refer to the description of P6.002.

P6.049	PATH 24 data		Address: 0662H 0663H
Default:	0	Control mode:	PR
Unit:	-	Setting range:	-2147483648 to +2147483647
Format:	DEC	Data size:	32-bit
Model:	E3C-L, E3C-L1		

Settings:

Refer to the description of P6.003.

P6.050	PATH 25 definition		Address: 0664H 0665H
Default:	0x00000000	Control mode:	PR
Unit:	-	Setting range:	0x00000000 to 0xFFFFFFFF
Format:	HEX	Data size:	32-bit
Model:	E3C-L, E3C-L1		

Settings:

Refer to the description of P6.002.

P6.051	PATH 25 data		Address: 0666H 0667H
Default:	0	Control mode:	PR
Unit:	-	Setting range:	-2147483648 to +2147483647
Format:	DEC	Data size:	32-bit
Model:	E3C-L, E3C-L1		

Settings:

Refer to the description of P6.003.

P6.052	PATH 26 definition		Address: 0668H 0669H
Default:	0x00000000	Control mode:	PR
Unit:	-	Setting range:	0x00000000 to 0xFFFFFFFF
Format:	HEX	Data size:	32-bit
Model:	E3C-L, E3C-L1		

Settings:

Refer to the description of P6.002.

P6.053	PATH 26 data		Address: 066AH 066BH
Default:	0	Control mode:	PR
Unit:	-	Setting range:	-2147483648 to +2147483647
Format:	DEC	Data size:	32-bit
Model:	E3C-L, E3C-L1		

Settings:

Refer to the description of P6.003.

P6.054	PATH 27 definition		Address: 066CH 066DH
Default:	0x00000000	Control mode:	PR
Unit:	-	Setting range:	0x00000000 to 0xFFFFFFFF
Format:	HEX	Data size:	32-bit
Model:	E3C-L, E3C-L1		

Settings:

Refer to the description of P6.002.

P6.055	PATH 27 data		Address: 066EH 066FH
Default:	0	Control mode:	PR
Unit:	-	Setting range:	-2147483648 to +2147483647
Format:	DEC	Data size:	32-bit
Model:	E3C-L, E3C-L1		

Settings:

Refer to the description of P6.003.

P6.056	PATH 28 definition		Address: 0670H 0671H
Default:	0x00000000	Control mode:	PR
Unit:	-	Setting range:	0x00000000 to 0xFFFFFFFF
Format:	HEX	Data size:	32-bit
Model:	E3C-L, E3C-L1		

Settings:

Refer to the description of P6.002.

P6.057	PATH 28 data		Address: 0672H 0673H
Default:	0	Control mode:	PR
Unit:	-	Setting range:	-2147483648 to +2147483647
Format:	DEC	Data size:	32-bit
Model:	E3C-L, E3C-L1		

Settings:

Refer to the description of P6.003.

P6.058	PATH 29 definition		Address: 0674H 0675H
Default:	0x00000000	Control mode:	PR
Unit:	-	Setting range:	0x00000000 to 0xFFFFFFFF
Format:	HEX	Data size:	32-bit
Model:	E3C-L, E3C-L1		

Settings:

Refer to the description of P6.002.

P6.059	PATH 29 data		Address: 0676H 0677H
Default:	0	Control mode:	PR
Unit:	-	Setting range:	-2147483648 to +2147483647
Format:	DEC	Data size:	32-bit
Model:	E3C-L, E3C-L1		

Settings:

Refer to the description of P6.003.

P6.060	PATH 30 definition		Address: 0678H 0679H
Default:	0x00000000	Control mode:	PR
Unit:	-	Setting range:	0x00000000 to 0xFFFFFFFF
Format:	HEX	Data size:	32-bit
Model:	E3C-L, E3C-L1		

Settings:

Refer to the description of P6.002.

P6.061	PATH 30 data		Address: 067AH 067BH
Default:	0	Control mode:	PR
Unit:	-	Setting range:	-2147483648 to +2147483647
Format:	DEC	Data size:	32-bit
Model:	E3C-L, E3C-L1		

Settings:

Refer to the description of P6.003.

P6.062	PATH 31 definition		Address: 067CH 067DH
Default:	0x00000000	Control mode:	PR
Unit:	-	Setting range:	0x00000000 to 0xFFFFFFFF
Format:	HEX	Data size:	32-bit
Model:	E3C-L, E3C-L1		

Settings:

Refer to the description of P6.002.

P6.063	PATH 31 data		Address: 067EH 067FH
Default:	0	Control mode:	PR
Unit:	-	Setting range:	-2147483648 to +2147483647
Format:	DEC	Data size:	32-bit
Model:	E3C-L, E3C-L1		

Settings:

Refer to the description of P6.003.

P6.064	PATH 32 definition		Address: 0680H 0681H
Default:	0x00000000	Control mode:	PR
Unit:	-	Setting range:	0x00000000 to 0xFFFFFFFF
Format:	HEX	Data size:	32-bit
Model:	E3C-L, E3C-L1		

Settings:

Refer to the description of P6.002.

P6.065	PATH 32 data		Address: 0682H 0683H
Default:	0	Control mode:	PR
Unit:	-	Setting range:	-2147483648 to +2147483647
Format:	DEC	Data size:	32-bit
Model:	E3C-L, E3C-L1		

Settings:

Refer to the description of P6.003.

P6.066	PATH 33 definition		Address: 0684H 0685H
Default:	0x00000000	Control mode:	PR
Unit:	-	Setting range:	0x00000000 to 0xFFFFFFFF
Format:	HEX	Data size:	32-bit
Model:	E3C-L, E3C-L1		

Settings:

Refer to the description of P6.002.

P6.067	PATH 33 data		Address: 0686H 0687H
Default:	0	Control mode:	PR
Unit:	-	Setting range:	-2147483648 to +2147483647
Format:	DEC	Data size:	32-bit
Model:	E3C-L, E3C-L1		

Settings:

Refer to the description of P6.003.

P6.068	PATH 34 definition		Address: 0688H 0689H
Default:	0x00000000	Control mode:	PR
Unit:	-	Setting range:	0x00000000 to 0xFFFFFFFF
Format:	HEX	Data size:	32-bit
Model:	E3C-L, E3C-L1		

Settings:

Refer to the description of P6.002.

P6.069	PATH 34 data		Address: 068AH 068BH
Default:	0	Control mode:	PR
Unit:	-	Setting range:	-2147483648 to +2147483647
Format:	DEC	Data size:	32-bit
Model:	E3C-L, E3C-L1		

Settings:

Refer to the description of P6.003.

P6.070	PATH 35 definition		Address: 068CH 068DH
Default:	0x00000000	Control mode:	PR
Unit:	-	Setting range:	0x00000000 to 0xFFFFFFFF
Format:	HEX	Data size:	32-bit
Model:	E3C-L, E3C-L1		

Settings:

Refer to the description of P6.002.

P6.071	PATH 35 data		Address: 068EH 068FH
Default:	0	Control mode:	PR
Unit:	-	Setting range:	-2147483648 to +2147483647
Format:	DEC	Data size:	32-bit
Model:	E3C-L, E3C-L1		

Settings:

Refer to the description of P6.003.

P6.072	PATH 36 definition		Address: 0690H 0691H
Default:	0x00000000	Control mode:	PR
Unit:	-	Setting range:	0x00000000 to 0xFFFFFFFF
Format:	HEX	Data size:	32-bit
Model:	E3C-L, E3C-L1		

Settings:

Refer to the description of P6.002.

P6.073	PATH 36 data		Address: 0692H 0693H
Default:	0	Control mode:	PR
Unit:	-	Setting range:	-2147483648 to +2147483647
Format:	DEC	Data size:	32-bit
Model:	E3C-L, E3C-L1		

Settings:

Refer to the description of P6.003.

P6.074	PATH 37 definition		Address: 0694H 0695H
Default:	0x00000000	Control mode:	PR
Unit:	-	Setting range:	0x00000000 to 0xFFFFFFFF
Format:	HEX	Data size:	32-bit
Model:	E3C-L, E3C-L1		

Settings:

Refer to the description of P6.002.

P6.075	PATH 37 data		Address: 0696H 0697H
Default:	0	Control mode:	PR
Unit:	-	Setting range:	-2147483648 to +2147483647
Format:	DEC	Data size:	32-bit
Model:	E3C-L, E3C-L1		

Settings:

Refer to the description of P6.003.

P6.076	PATH 38 definition		Address: 0698H 0699H
Default:	0x00000000	Control mode:	PR
Unit:	-	Setting range:	0x00000000 to 0xFFFFFFFF
Format:	HEX	Data size:	32-bit
Model:	E3C-L, E3C-L1		

Settings:

Refer to the description of P6.002.

P6.077	PATH 38 data		Address: 069AH 069BH
Default:	0	Control mode:	PR
Unit:	-	Setting range:	-2147483648 to +2147483647
Format:	DEC	Data size:	32-bit
Model:	E3C-L, E3C-L1		

Settings:

Refer to the description of P6.003.

P6.078	PATH 39 definition		Address: 069CH 069DH
Default:	0x00000000	Control mode:	PR
Unit:	-	Setting range:	0x00000000 to 0xFFFFFFFF
Format:	HEX	Data size:	32-bit
Model:	E3C-L, E3C-L1		

Settings:

Refer to the description of P6.002.

P6.079	PATH 39 data		Address: 069EH 069FH
Default:	0	Control mode:	PR
Unit:	-	Setting range:	-2147483648 to +2147483647
Format:	DEC	Data size:	32-bit
Model:	E3C-L, E3C-L1		

Settings:

Refer to the description of P6.003.

P6.080	PATH 40 definition		Address: 06A0H 06A1H
Default:	0x00000000	Control mode:	PR
Unit:	-	Setting range:	0x00000000 to 0xFFFFFFFF
Format:	HEX	Data size:	32-bit
Model:	E3C-L, E3C-L1		

Settings:

Refer to the description of P6.002.

P6.081	PATH 40 data		Address: 06A2H 06A3H
Default:	0	Control mode:	PR
Unit:	-	Setting range:	-2147483648 to +2147483647
Format:	DEC	Data size:	32-bit
Model:	E3C-L, E3C-L1		

Settings:

Refer to the description of P6.003.

P6.082	PATH 41 definition		Address: 06A4H 06A5H
Default:	0x00000000	Control mode:	PR
Unit:	-	Setting range:	0x00000000 to 0xFFFFFFFF
Format:	HEX	Data size:	32-bit
Model:	E3C-L, E3C-L1		

Settings:

Refer to the description of P6.002.

P6.083	PATH 41 data		Address: 06A6H 06A7H
Default:	0	Control mode:	PR
Unit:	-	Setting range:	-2147483648 to +2147483647
Format:	DEC	Data size:	32-bit
Model:	E3C-L, E3C-L1		

Settings:

Refer to the description of P6.003.

P6.084	PATH 42 definition		Address: 06A8H 06A9H
Default:	0x00000000	Control mode:	PR
Unit:	-	Setting range:	0x00000000 to 0xFFFFFFFF
Format:	HEX	Data size:	32-bit
Model:	E3C-L, E3C-L1		

Settings:

Refer to the description of P6.002.

P6.085	PATH 42 data		Address: 06AAH 06ABH
Default:	0	Control mode:	PR
Unit:	-	Setting range:	-2147483648 to +2147483647
Format:	DEC	Data size:	32-bit
Model:	E3C-L, E3C-L1		

Settings:

Refer to the description of P6.003.

P6.086	PATH 43 definition		Address: 06ACH 06ADH
Default:	0x00000000	Control mode:	PR
Unit:	-	Setting range:	0x00000000 to 0xFFFFFFFF
Format:	HEX	Data size:	32-bit
Model:	E3C-L, E3C-L1		

Settings:

Refer to the description of P6.002.

P6.087	PATH 43 data		Address: 06AEH 06AFH
Default:	0	Control mode:	PR
Unit:	-	Setting range:	-2147483648 to +2147483647
Format:	DEC	Data size:	32-bit
Model:	E3C-L, E3C-L1		

Settings:

Refer to the description of P6.003.

P6.088	PATH 44 definition		Address: 06B0H 06B1H
Default:	0x00000000	Control mode:	PR
Unit:	-	Setting range:	0x00000000 to 0xFFFFFFFF
Format:	HEX	Data size:	32-bit
Model:	E3C-L, E3C-L1		

Settings:

Refer to the description of P6.002.

P6.089	PATH 44 data		Address: 06B2H 06B3H
Default:	0	Control mode:	PR
Unit:	-	Setting range:	-2147483648 to +2147483647
Format:	DEC	Data size:	32-bit
Model:	E3C-L, E3C-L1		

Settings:

Refer to the description of P6.003.

P6.090	PATH 45 definition		Address: 06B4H 06B5H
Default:	0x00000000	Control mode:	PR
Unit:	-	Setting range:	0x00000000 to 0xFFFFFFFF
Format:	HEX	Data size:	32-bit
Model:	E3C-L, E3C-L1		

Settings:

Refer to the description of P6.002.

P6.091	PATH 45 data		Address: 06B6H 06B7H
Default:	0	Control mode:	PR
Unit:	-	Setting range:	-2147483648 to +2147483647
Format:	DEC	Data size:	32-bit
Model:	E3C-L, E3C-L1		

Settings:

Refer to the description of P6.003.

P6.092	PATH 46 definition		Address: 06B8H 06B9H
Default:	0x00000000	Control mode:	PR
Unit:	-	Setting range:	0x00000000 to 0xFFFFFFFF
Format:	HEX	Data size:	32-bit
Model:	E3C-L, E3C-L1		

Settings:

Refer to the description of P6.002.

P6.093	PATH 46 data		Address: 06BAH 06BBH
Default:	0	Control mode:	PR
Unit:	-	Setting range:	-2147483648 to +2147483647
Format:	DEC	Data size:	32-bit
Model:	E3C-L, E3C-L1		

Settings:

Refer to the description of P6.003.

P6.094	PATH 47 definition		Address: 06BCH 06BDH
Default:	0x00000000	Control mode:	PR
Unit:	-	Setting range:	0x00000000 to 0xFFFFFFFF
Format:	HEX	Data size:	32-bit
Model:	E3C-L, E3C-L1		

Settings:

Refer to the description of P6.002.

P6.095	PATH 47 data		Address: 06BEH 06BFH
Default:	0	Control mode:	PR
Unit:	-	Setting range:	-2147483648 to +2147483647
Format:	DEC	Data size:	32-bit
Model:	E3C-L, E3C-L1		

Settings:

Refer to the description of P6.003.

P6.096	PATH 48 definition		Address: 06C0H 06C1H
Default:	0x00000000	Control mode:	PR
Unit:	-	Setting range:	0x00000000 to 0xFFFFFFFF
Format:	HEX	Data size:	32-bit
Model:	E3C-L, E3C-L1		

Settings:

Refer to the description of P6.002.

P6.097	PATH 48 data		Address: 06C2H 06C3H
Default:	0	Control mode:	PR
Unit:	-	Setting range:	-2147483648 to +2147483647
Format:	DEC	Data size:	32-bit
Model:	E3C-L, E3C-L1		

Settings:

Refer to the description of P6.003.

P6.098	PATH 49 definition		Address: 06C4H 06C5H
Default:	0x00000000	Control mode:	PR
Unit:	-	Setting range:	0x00000000 to 0xFFFFFFFF
Format:	HEX	Data size:	32-bit
Model:	E3C-L, E3C-L1		

Settings:

Refer to the description of P6.002.

P6.099	PATH 49 data		Address: 06C6H 06C7H
Default:	0	Control mode:	PR
Unit:	-	Setting range:	-2147483648 to +2147483647
Format:	DEC	Data size:	32-bit
Model:	E3C-L, E3C-L1		

Settings:

Refer to the description of P6.003.

P7.xxx PR parameters

P7.000	PATH 50 definition		Address: 0700H 0701H
Default:	0x00000000	Control mode:	PR
Unit:	-	Setting range:	0x00000000 to 0xFFFFFFFF
Format:	HEX	Data size:	32-bit
Model:	E3C-L, E3C-L1		

Settings:

Refer to the description of P6.002.

P7.001	PATH 50 data		Address: 0702H 0703H
Default:	0	Control mode:	PR
Unit:	-	Setting range:	-2147483648 to +2147483647
Format:	DEC	Data size:	32-bit
Model:	E3C-L, E3C-L1		

Settings:

Refer to the description of P6.003.

P7.002	PATH 51 definition		Address: 0704H 0705H
Default:	0x00000000	Control mode:	PR
Unit:	-	Setting range:	0x00000000 to 0xFFFFFFFF
Format:	HEX	Data size:	32-bit
Model:	E3C-L, E3C-L1		

Settings:

Refer to the description of P6.002.

P7.003	PATH 51 data		Address: 0706H 0707H
Default:	0	Control mode:	PR
Unit:	-	Setting range:	-2147483648 to +2147483647
Format:	DEC	Data size:	32-bit
Model:	E3C-L, E3C-L1		

Settings:

Refer to the description of P6.003.

P7.004	PATH 52 definition		Address: 0708H 0709H
Default:	0x00000000	Control mode:	PR
Unit:	-	Setting range:	0x00000000 to 0xFFFFFFFF
Format:	HEX	Data size:	32-bit
Model:	E3C-L, E3C-L1		

Settings:

Refer to the description of P6.002.

P7.005	PATH 52 data		Address: 070AH 070BH
Default:	0	Control mode:	PR
Unit:	-	Setting range:	-2147483648 to +2147483647
Format:	DEC	Data size:	32-bit
Model:	E3C-L, E3C-L1		

Settings:

Refer to the description of P6.003.

P7.006	PATH 53 definition		Address: 070CH 070DH
Default:	0x00000000	Control mode:	PR
Unit:	-	Setting range:	0x00000000 to 0xFFFFFFFF
Format:	HEX	Data size:	32-bit
Model:	E3C-L, E3C-L1		

Settings:

Refer to the description of P6.002.

P7.007	PATH 53 data		Address: 070EH 070FH
Default:	0	Control mode:	PR
Unit:	-	Setting range:	-2147483648 to +2147483647
Format:	DEC	Data size:	32-bit
Model:	E3C-L, E3C-L1		

Settings:

Refer to the description of P6.003.

P7.008	PATH 54 definition		Address: 0710H 0711H
Default:	0x00000000	Control mode:	PR
Unit:	-	Setting range:	0x00000000 to 0xFFFFFFFF
Format:	HEX	Data size:	32-bit
Model:	E3C-L, E3C-L1		

Settings:

Refer to the description of P6.002.

P7.009	PATH 54 data		Address: 0712H 0713H
Default:	0	Control mode:	PR
Unit:	-	Setting range:	-2147483648 to +2147483647
Format:	DEC	Data size:	32-bit
Model:	E3C-L, E3C-L1		

Settings:

Refer to the description of P6.003.

P7.010	PATH 55 definition		Address: 0714H 0715H
Default:	0x00000000	Control mode:	PR
Unit:	-	Setting range:	0x00000000 to 0xFFFFFFFF
Format:	HEX	Data size:	32-bit
Model:	E3C-L, E3C-L1		

Settings:

Refer to the description of P6.002.

P7.011	PATH 55 data		Address: 0716H 0717H
Default:	0	Control mode:	PR
Unit:	-	Setting range:	-2147483648 to +2147483647
Format:	DEC	Data size:	32-bit
Model:	E3C-L, E3C-L1		

Settings:

Refer to the description of P6.003.

P7.012	PATH 56 definition		Address: 0718H 0719H
Default:	0x00000000	Control mode:	PR
Unit:	-	Setting range:	0x00000000 to 0xFFFFFFFF
Format:	HEX	Data size:	32-bit
Model:	E3C-L, E3C-L1		

Settings:

Refer to the description of P6.002.

P7.013	PATH 56 data		Address: 071AH 071BH
Default:	0	Control mode:	PR
Unit:	-	Setting range:	-2147483648 to +2147483647
Format:	DEC	Data size:	32-bit
Model:	E3C-L, E3C-L1		

Settings:

Refer to the description of P6.003.

P7.014	PATH 57 definition		Address: 071CH 071DH
Default:	0x00000000	Control mode:	PR
Unit:	-	Setting range:	0x00000000 to 0xFFFFFFFF
Format:	HEX	Data size:	32-bit
Model:	E3C-L, E3C-L1		

Settings:

Refer to the description of P6.002.

P7.015	PATH 57 data		Address: 071EH 071FH
Default:	0	Control mode:	PR
Unit:	-	Setting range:	-2147483648 to +2147483647
Format:	DEC	Data size:	32-bit
Model:	E3C-L, E3C-L1		

Settings:

Refer to the description of P6.003.

P7.016	PATH 58 definition		Address: 0720H 0721H
Default:	0x00000000	Control mode:	PR
Unit:	-	Setting range:	0x00000000 to 0xFFFFFFFF
Format:	HEX	Data size:	32-bit
Model:	E3C-L, E3C-L1		

Settings:

Refer to the description of P6.002.

P7.017	PATH 58 data		Address: 0722H 0723H
Default:	0	Control mode:	PR
Unit:	-	Setting range:	-2147483648 to +2147483647
Format:	DEC	Data size:	32-bit
Model:	E3C-L, E3C-L1		

Settings:

Refer to the description of P6.003.

P7.018	PATH 59 definition		Address: 0724H 0725H
Default:	0x00000000	Control mode:	PR
Unit:	-	Setting range:	0x00000000 to 0xFFFFFFFF
Format:	HEX	Data size:	32-bit
Model:	E3C-L, E3C-L1		

Settings:

Refer to the description of P6.002.

P7.019	PATH 59 data		Address: 0726H 0727H
Default:	0	Control mode:	PR
Unit:	-	Setting range:	-2147483648 to +2147483647
Format:	DEC	Data size:	32-bit
Model:	E3C-L, E3C-L1		

Settings:

Refer to the description of P6.003.

P7.020	PATH 60 definition		Address: 0728H 0729H
Default:	0x00000000	Control mode:	PR
Unit:	-	Setting range:	0x00000000 to 0xFFFFFFFF
Format:	HEX	Data size:	32-bit
Model:	E3C-L, E3C-L1		

Settings:

Refer to the description of P6.002.

P7.021	PATH 60 data		Address: 072AH 072BH
Default:	0	Control mode:	PR
Unit:	-	Setting range:	-2147483648 to +2147483647
Format:	DEC	Data size:	32-bit
Model:	E3C-L, E3C-L1		

Settings:

Refer to the description of P6.003.

P7.022	PATH 61 definition		Address: 072CH 072DH
Default:	0x00000000	Control mode:	PR
Unit:	-	Setting range:	0x00000000 to 0xFFFFFFFF
Format:	HEX	Data size:	32-bit
Model:	E3C-L, E3C-L1		

Settings:

Refer to the description of P6.002.

P7.023	PATH 61 data		Address: 072EH 072FH
Default:	0	Control mode:	PR
Unit:	-	Setting range:	-2147483648 to +2147483647
Format:	DEC	Data size:	32-bit
Model:	E3C-L, E3C-L1		

Settings:

Refer to the description of P6.003.

P7.024	PATH 62 definition		Address: 0730H 0731H
Default:	0x00000000	Control mode:	PR
Unit:	-	Setting range:	0x00000000 to 0xFFFFFFFF
Format:	HEX	Data size:	32-bit
Model:	E3C-L, E3C-L1		

Settings:

Refer to the description of P6.002.

P7.025	PATH 62 data		Address: 0732H 0733H
Default:	0	Control mode:	PR
Unit:	-	Setting range:	-2147483648 to +2147483647
Format:	DEC	Data size:	32-bit
Model:	E3C-L, E3C-L1		

Settings:

Refer to the description of P6.003.

P7.026	PATH 63 definition		Address: 0734H 0735H
Default:	0x00000000	Control mode:	PR
Unit:	-	Setting range:	0x00000000 to 0xFFFFFFFF
Format:	HEX	Data size:	32-bit
Model:	E3C-L, E3C-L1		

Settings:

Refer to the description of P6.002.

P7.027	PATH 63 data		Address: 0736H 0737H
Default:	0	Control mode:	PR
Unit:	-	Setting range:	-2147483648 to +2147483647
Format:	DEC	Data size:	32-bit
Model:	E3C-L, E3C-L1		

Settings:

Refer to the description of P6.003.

Table 8.1 Digital input (DI) descriptions

Value: 0x01			
DI name	Description	Triggering method	Control mode
SON	When this DI is On, the servo is activated (Servo On).	Level triggered	All

Value: 0x02			
DI name	Description	Triggering method	Control mode
ARST	After you troubleshoot the alarm, this DI is On and the alarm signal displayed by the servo drive is cleared.	Rising-edge triggered	All

Value: 0x03			
DI name	Description	Triggering method	Control mode
GAINUP	In Speed and Position modes, when this DI is On (P2.027 set to 0x0001), the gain value switches to the value which is the original gain multiplied by the rate of change.	Level triggered	PT, PR, S

Value: 0x04			
DI name	Description	Triggering method	Control mode
CCLR	Clear the pulse counter. Refer to P2.050 for the method to clear the pulses. When this DI is On, the accumulative position pulse error of the drive is cleared to 0. Note: change the triggering method with P2.050.	Rising-edge triggered, level triggered	PT, PR

Value: 0x05			
DI name	Description	Triggering method	Control mode
ZCLAMP	When the speed is slower than the setting of P1.038 (Zero speed detection level), the motor stops operating when this DI is On. 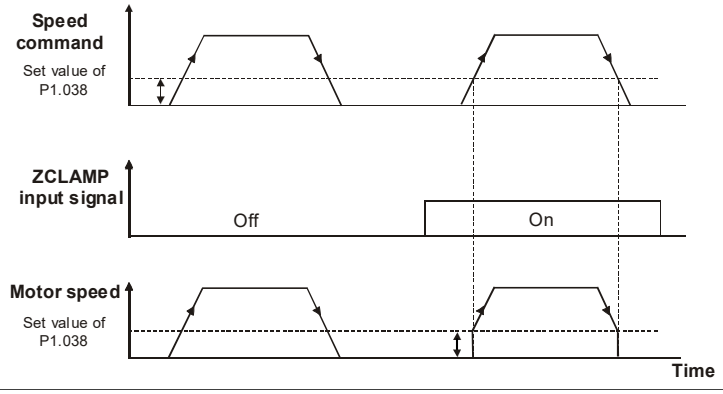	Level triggered	S

Value: 0x06			
DI name	Description	Triggering method	Control mode
CMDINV	In Speed and Torque modes, the input command is reversed when this DI is On.	Level triggered	S, Sz, T, Tz

8

Value: 0x08			
DI name	Description	Triggering method	Control mode
CTRG	In PR mode, after the PR Position command (POS0 - 5) is selected, the motor operates according to the command issued by the register when this DI is On.	Rising-edge triggered	PR

Value: 0x09			
DI name	Description	Triggering method	Control mode
TRQLM	In Speed and Position modes, motor torque is limited when this DI is On, and source of the Torque limit command is the internal register or analog voltage.	Level triggered	PT, PR, S

Value: 0x0F			
DI name	Description	Triggering method	Control mode
SPDKVC	Switch between P1.040 (Maximum motor speed for analog Speed command 1) and P1.081 (Maximum motor speed for analog Speed command 2).	Level triggered	S

Value: 0x10			
DI name	Description	Triggering method	Control mode
SPDLM	In Torque mode, motor speed is limited when this DI is On, and source of the Speed limit command is the internal register or analog voltage.	Level triggered	T

Value: 0x11, 0x12, 0x13, 0x1A, 0x1B, 0x1C

DI name	Description	Triggering method	Control mode
POS0 POS1 POS2 POS3 POS4 POS5	PR path selection (0 - 63)	Level triggered	PR

Position command	POS5	POS4	POS3	POS2	POS1	POS0	CTRG	Corresponding parameter
Homing	0	0	0	0	0	0	↑	P6.000
								P6.001
PR#01	0	0	0	0	0	1	↑	P6.002
								P6.003
...								...
PR#50	1	1	0	0	1	0	↑	P6.098
								P6.099
PR#51	1	1	0	0	1	1	↑	P7.000
								P7.001
...								...
PR#63	1	1	1	1	1	1	↑	P7.026
								P7.027

Value: 0x1D

DI name	Description	Triggering method	Control mode
ABSE	When DI.ABSE is On, the servo is in absolute mode and the functions of DI.ABSQ, DI.ABSC, DO.ABSR, and DO.ABSD are enabled at the same time. When DI.ABSE is On, the functions of DI4, DO2, and DO3 are no longer the ones planned by the corresponding parameters. The DI4 function will be DI.ABSQ, DO2 will be DO.ABSR, and DO3 will be DO.ABSD. In addition, the DI point of ABSC can be assigned by parameter settings.	Level triggered	All

Value: 0x1F

DI name	Description	Triggering method	Control mode
ABSC	When DI.ABSC is On, the system clears the number of revolutions saved in the absolute encoder, but this DI is only valid when DI.ABSE is On.	Rising-edge triggered	All

Value: when DI.ABSE is On, the function of DI4 is changed to DI.ABSQ

DI name	Description	Triggering method	Control mode
ABSQ (always input by DI4)	During I/O transmission, the controller sends the handshaking signal. When DI.ABSQ is Off, the controller issues the request; when DI.ABSQ is On, the controller has processed the ABSD signal. This signal is only valid when DI.ABSE is On; when DI.ABSE is Off, the function of DI4 is planned by P2.013.	Rising- and falling-edge triggered	All

Value: 0x14, 0x15

DI name	Description	Triggering method	Control mode
SPD0 SPD1	Register Speed command selection (1 - 4)	Level triggered	S, Sz

Speed command number	DI signal of CN1		Command source		Content
	SPD1	SPD0			
S1	0	0	S	External analog signal	Voltage difference between V_REF and GND
			Sz	N/A	Speed command is 0
S2	0	1	Internal register (parameter)		P1.009
S3	1	0			P1.010
S4	1	1			P1.011

Value: 0x16, 0x17

DI name	Description	Triggering method	Control mode
TCM0 TCM1	Register Torque command selection (1 - 4)	Level triggered	T, Tz

Torque command number	DI signal of CN1		Command source		Content
	TCM1	TCM0			
T1	0	0	T	External analog signal	Voltage difference between T_REF and GND
			Tz	N/A	Torque command is 0
T2	0	1	Internal register (parameter)		P1.012
T3	1	0			P1.013
T4	1	1			P1.014

8

Value: 0x18			
DI name	Description	Triggering method	Control mode
S-P	In dual or multiple modes of S-P, when this DI is Off, the drive is in Speed mode; when this DI is On, the drive is in Position mode. Select PT or PR with DI.PT-PR (0x2B).	Level triggered	Dual / Multiple

Value: 0x19			
DI name	Description	Triggering method	Control mode
S-T	In dual or multiple modes of S-T, when this DI is Off, the drive is in Speed mode; when this DI is On, the drive is in Torque mode.	Level triggered	Dual / Multiple

Value: 0x20			
DI name	Description	Triggering method	Control mode
T-P	In dual or multiple modes of T-P, when this DI is Off, the drive is in Torque mode; when this DI is On, the drive is in Position mode. Select PT or PR with DI.PT-PR (0x2B).	Level triggered	Dual / Multiple

Value: 0x21			
DI name	Description	Triggering method	Control mode
EMGS	When this DI is On, the motor stops immediately.	Level triggered	All

Value: 0x22			
DI name	Description	Triggering method	Control mode
NL (CWL)	Negative inhibit limit (normally closed contact).	Level triggered	All

Value: 0x23			
DI name	Description	Triggering method	Control mode
PL (CCWL)	Positive inhibit limit (normally closed contact).	Level triggered	All

Value: 0x24			
DI name	Description	Triggering method	Control mode
ORGP	During homing, when this DI is On, the servo regards this position as the origin. Refer to the setting of P5.004.	Rising- and falling-edge triggered	PR

Value: 0x27			
DI name	Description	Triggering method	Control mode
SHOM	During homing, when this DI is On, the servo starts to search for the origin. Refer to the setting of P5.004.	Rising-edge triggered	PR

Value: 0x2B			
DI name	Description	Triggering method	Control mode
PT-PR	Use this DI to select the command source in dual or multiple modes of PT-PR. When this DI is Off, the drive is in PT mode; when this DI is On, the drive is in PR mode.	Level triggered	Dual / multiple

Value: 0x37			
DI name	Description	Triggering method	Control mode
JOGU	When this DI is On, the motor jogs in the positive direction.	Level triggered	All

Value: 0x38			
DI name	Description	Triggering method	Control mode
JOGD	When this DI is On, the motor jogs in the negative direction.	Level triggered	All

Value: 0x39			
DI name	Description	Triggering method	Control mode
EV1	Event trigger command 1. Refer to the settings of P5.098 and P5.099.	Rising- and falling-edge triggered	PR

Value: 0x3A			
DI name	Description	Triggering method	Control mode
EV2	Event trigger command 2. Refer to the settings of P5.098 and P5.099.	Rising- and falling-edge triggered	PR

Value: 0x3B			
DI name	Description	Triggering method	Control mode
EV3	Event trigger command 3. Refer to the settings of P5.098 and P5.099.	Rising- and falling-edge triggered	PR

Value: 0x3C			
DI name	Description	Triggering method	Control mode
EV4	Event trigger command 4. Refer to the settings of P5.098 and P5.099.	Rising- and falling-edge triggered	PR

8

Value: 0x43, 0x44			
DI name	Description	Triggering method	Control mode
GNUM0 GNUM1	E-Gear ratio (numerator) selection 0 E-Gear ratio (numerator) selection 1 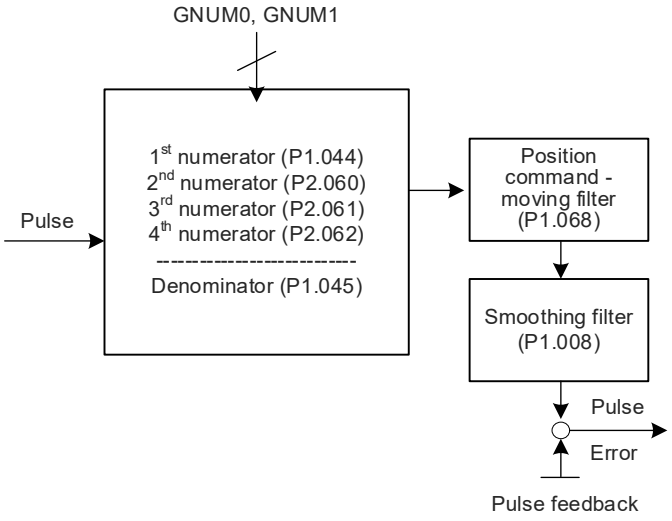	Level triggered	PT

Value: 0x45			
DI name	Description	Triggering method	Control mode
INHP	In PT mode, the external pulse input command has no function when this DI is On. Important: this function has to be set to DI8 to ensure immediate pulse inhibition.	Level triggered	PT

Value: 0x46			
DI name	Description	Triggering method	Control mode
STP	Motor stops.	Rising-edge triggered	PR

Value: 0x47			
DI name	Description	Triggering method	Control mode
PFQS	Use this DI to set the emergency stop for P5.003 (Deceleration time for auto-protection). When this DI is On, AL35F occurs and the motor starts decelerating. When the motor speed reaches 0, AL3CF occurs and servo is switched to Servo Off. You need to perform alarm reset to have the servo switched back to Servo On.	Rising-edge triggered	PT, PR, T, S

Value: 0x48, 0x49

DI name	Description	Triggering method	Control mode
TQP TQN	This function can decide the actual torque output status: Torque command output, reversed Torque command output, or zero torque output. Before using this function, enable the Speed limit function through P1.002.X or DI.SPDLM first. The Speed command is selected with DI.SPD0 and DI.SPD1. The acceleration / deceleration time is determined by P1.034, P1.035, and P1.036. The Torque command is selected with DI.TCM0 and DI.TCM1. If any DI is defined as either DI.TQP or DI.TQN, the torque output status is decided by DI.TQP and DI.TQN.	Level triggered	T, Tz

DI.TQP (0x48)	DI.TQN (0x49)	Status
On	On	Zero torque output
On	Off	Torque command output
Off	On	Reversed Torque command output
Off	Off	Zero torque output

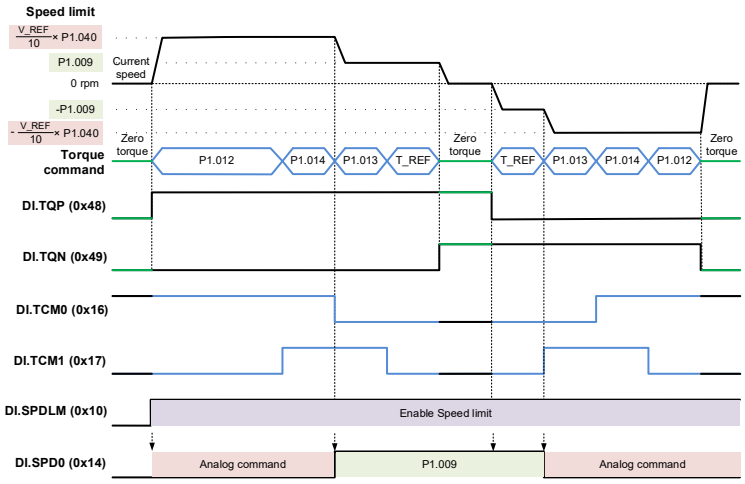

Note: the digital input function is disabled when P2.010 - P2.017 and P2.036 - P2.040 are set to 0.

8

Table 8.2 Digital output (DO) descriptions

Value: 0x01			
DO name	Description	Triggering method	Control mode
SRDY	When the control circuit power and main circuit power are applied to the drive, this DO is On if no alarm occurs.	Level triggered	All

Value: 0x02			
DO name	Description	Triggering method	Control mode
SON	When the servo is activated (Servo On), this DO is On if no alarm occurs.	Level triggered	All

Value: 0x03			
DO name	Description	Triggering method	Control mode
ZSPD	When the motor speed is slower than the zero speed setting (P1.038), this DO is On.	Level triggered	All

Value: 0x04			
DO name	Description	Triggering method	Control mode
TSPD	When the motor speed is faster than the target speed setting (P1.039), this DO is On.	Level triggered	All

Value: 0x05			
DO name	Description	Triggering method	Control mode
TPOS	When the pulse number error is smaller than the position range setting (P1.054), this DO is On.	Level triggered	PT, PR

Value: 0x06			
DO name	Description	Triggering method	Control mode
TQL	When the torque limit is activated, this DO is On.	Level triggered	All (except for T and Tz)

Value: 0x07			
DO name	Description	Triggering method	Control mode
ALRM	When a servo alarm occurs, this DO is On. (Except for positive / negative limit, communication error, and undervoltage.)	Level triggered	All

Value: 0x08			
DO name	Description	Triggering method	Control mode
BRKR	Output signal of the electromagnetic brake control. Set P1.042 and P1.043 to adjust the delay time before and after the electromagnetic brake control function is activated and deactivated. 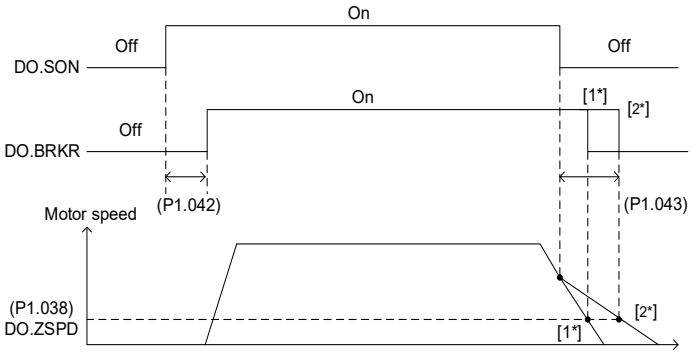 Refer to the note in P1.042.	Level triggered	All

Value: 0x09			
DO name	Description	Triggering method	Control mode
HOME	When homing is complete, it means the position system and position counter are defined and this DO is On. When power is applied for the first time, this DO is Off; when homing is complete, this DO is On. During operation, this DO is On until the position counter overflows (including commands or feedback). Then, this DO turns Off. When the homing command is triggered, this DO is Off; after homing is complete, this DO is On.	Level triggered	PR

Value: 0x0D			
DO name	Description	Triggering method	Control mode
ABSW	When an absolute encoder alarm occurs, this DO is On.	-	All

Value: 0x0E			
DO name	Description	Triggering method	Control mode
IDXD	When this DO is On, it means the rotary axis position is defined. When homing is complete, the rotary axis position is defined as well.	-	PR

8

Value: 0x10			
DO name	Description	Triggering method	Control mode
OLW	This DO is On when the accumulative overload time exceeds t_{OL}. However, if the accumulative overload time exceeds the allowable overload time of the servo, the servo sends the overload alarms AL006 and AL023. t_{OL}= Allowable overload time of the servo x setting value of P1.056 (Motor output overload warning level) For example: P1.056 = 60 (unit: %). When the output average load of the servo drive is 200% and the output time exceeds 8 seconds, the overload alarms (AL006 and AL023) occur. t_{OL} = 8 sec x 60% = 4.8 sec That is, when the output average load of the servo drive is 200% for over t_{OL} = 4.8 seconds, DO.OLW (0x10) is On. If the duration exceeds 8 seconds, the servo drive sends AL006 (Overload) and AL023 (Early overload warning).	Level triggered	All

Value: 0x11			
DO name	Description	Triggering method	Control mode
WARN	Warning outputs (positive / negative limit, communication error, and undervoltage).	Level triggered	All

Value: 0x12			
DO name	Description	Triggering method	Control mode
OVF	Position command / feedback overflows.	Level triggered	PT, PR

Value: 0x13			
DO name	Description	Triggering method	Control mode
SNL (SCWL)	Software limit (negative limit).	Level triggered	PR

Value: 0x14			
DO name	Description	Triggering method	Control mode
SPL (SCCWL)	Software limit (positive limit).	Level triggered	PR

Value: 0x15			
DO name	Description	Triggering method	Control mode
Cmd_OK	When the Position command is complete and the drive enters Position mode, this DO is On. When the Position command is executing, this DO is Off; after the command is complete, this DO is On. This DO only indicates that the command is complete, but the motor positioning may not be complete yet. Refer to DO.TPOS.	Level triggered	PR

Value: 0x17			
DO name	Description	Triggering method	Control mode
MC_OK	When both DO.Cmd_OK and DO.TPOS are On, then this DO is On; otherwise, it is Off. Refer to P1.048.	Level triggered	PR

Value: 0x19			
DO name	Description	Triggering method	Control mode
SP_OK	Motor speed reaches the target speed: in Speed modes, when the error between the speed feedback and the command is smaller than the value of P1.047, this DO is On.	Level triggered	S, Sz

Value: 0x2C			
DO name	Description	Triggering method	Control mode
Zon1	First set of general range comparison: when the value of the item monitored by P0.009 ranges between the values of P0.054 and P0.055, then this DO is On.	-	All

Value: 0x30			
DO name	Description	Triggering method	Control mode
SPO_0	Output Bit 0 of P4.006.	Level triggered	All

Value: 0x31			
DO name	Description	Triggering method	Control mode
SPO_1	Output Bit 1 of P4.006.	Level triggered	All

Value: 0x32			
DO name	Description	Triggering method	Control mode
SPO_2	Output Bit 2 of P4.006.	Level triggered	All

Value: 0x33			
DO name	Description	Triggering method	Control mode
SPO_3	Output Bit 3 of P4.006.	Level triggered	All

Value: 0x34			
DO name	Description	Triggering method	Control mode
SPO_4	Output Bit 4 of P4.006.	Level triggered	All

Value: 0x35			
DO name	Description	Triggering method	Control mode
SPO_5	Output Bit 5 of P4.006.	Level triggered	All

8

Value: 0x36			
DO name	Description	Triggering method	Control mode
SPO_6	Output Bit 6 of P4.006.	Level triggered	All

Value: 0x37			
DO name	Description	Triggering method	Control mode
SPO_7	Output Bit 7 of P4.006.	Level triggered	All

Value: 0x38			
DO name	Description	Triggering method	Control mode
SPO_8	Output Bit 8 of P4.006.	Level triggered	All

Value: 0x39			
DO name	Description	Triggering method	Control mode
SPO_9	Output Bit 9 of P4.006.	Level triggered	All

Value: 0x3A			
DO name	Description	Triggering method	Control mode
SPO_A	Output Bit 10 of P4.006.	Level triggered	All

Value: 0x3B			
DO name	Description	Triggering method	Control mode
SPO_B	Output Bit 11 of P4.006.	Level triggered	All

Value: 0x3C			
DO name	Description	Triggering method	Control mode
SPO_C	Output Bit 12 of P4.006.	Level triggered	All

Value: 0x3D			
DO name	Description	Triggering method	Control mode
SPO_D	Output Bit 13 of P4.006.	Level triggered	All

Value: 0x3E			
DO name	Description	Triggering method	Control mode
SPO_E	Output Bit 14 of P4.006.	Level triggered	All

Value: 0x3F			
DO name	Description	Triggering method	Control mode
SPO_F	Output Bit 15 of P4.006.	Level triggered	All

Value: when DI.ABSE is On, the function of DO2 is changed to DO.ABSR			
DO name	Description	Triggering method	Control mode
ABSR (always output by DO2)	When DO.ABSR is Off, it indicates the servo drive can receive request issued by DI.ABSQ. When DO.ABSR is On, it indicates after the request is received, the data has been prepared and the ABSD data is valid for the controller to access. This signal is only valid when DI.ABSE is On; when DI.ABSE is Off, the function of DO2 is planned by P2.019.	Level triggered	All

Value: when DI.ABSE is On, the function of DO3 is changed to DO.ABSD			
DO name	Description	Triggering method	Control mode
ABSD (always output by DO3)	The DO for ABS data. This signal is only valid when both DI.ABSE and DO.ABSR are On; when DI.ABSE is Off, the function of DO3 is planned by P2.020.	Level triggered	All

Note: the digital output function is disabled when P2.018 - P2.022 are set to 0.

Table 8.3 Monitoring variables descriptions

Description of monitoring variables:

Item	Description
Monitoring code	Each monitoring variable has a code, and you can set the code in P0.002 for monitoring the variable.
Format	Each monitoring variable is stored as a 32-bit long integer in the servo drive.
Category	1. Basic variables: the variables displayed on the panel (P0.002 = 0 to 26), which can be scrolled through with the UP / DOWN key in Monitoring mode. 2. Extension variables: the variables other than basic variables.
Monitoring method	1. Panel display: monitor with the panel. 2. Mapping: monitor the variables or parameters by mapping parameters.
Panel display	1. Use the MODE key to switch to the Monitoring mode and press the UP / DOWN key to select the variable to monitor. 2. Input the code of the variable to be monitored into P0.002 and start monitoring. Press the SHIFT key on the panel to switch between high and low word display; press the SET key on the panel to switch between decimal and hexadecimal display.
Mapping	1. Parameters that support monitoring variable mapping: P0.009 - P0.013. Refer to Section 8.2 Parameter descriptions. 2. Read the monitoring variables through communication using mapping parameters. 3. The values of the mapping parameters (P0.009 - P0.013) are the content of the basic variables 17h, 18h, 19h, and 1Ah. To monitor P0.009, set P0.017 to the value to read (refer to P0.002). When reading the data through communication, you can directly read the data specified by P0.017; when monitoring the data through the panel (set P0.002 to 23), the panel displays “VAR-1” and then the content value of P0.009.

The property code of each monitoring variable is described in the following table:

Property	Description
B	Basic variables, which can be selected with the UP / DOWN keys on the panel.
D1 D2	Decimal place displayed on the panel. D1 indicates 1 decimal place and D2 indicates 2 decimal places.
Dec	Only decimal display is available on the panel, and you cannot switch to hexadecimal display by pressing the SET key.
Hex	Only hexadecimal display is available on the panel, and you cannot switch to decimal display by pressing the SET key.

The monitoring variables are described in the following table by the code sequence:

Code	Variable name / property	Description
000 (00h)	Position feedback (PUU) B	Current position feedback of the motor encoder. Unit: Pulse of User Unit (PUU).
001 (01h)	Position command (PUU) B	Current position of the Position command. Unit: Pulse of User Unit (PUU). PT mode: number of pulse commands received by the drive. PR mode: absolute position of the Position command.
002 (02h)	Following error (PUU) B	Difference between the Position command before filtered and the position feedback. Unit: Pulse of User Unit (PUU).
003 (03h)	Position feedback (pulse) B	Current position feedback of the motor encoder. Unit: encoder unit (pulse).
004 (04h)	Position command (pulse) B	Current position of the Position command. Unit: encoder unit (pulse).
005 (05h)	Following error (pulse) B	Difference between the Position command before filtered and the position feedback. Unit: encoder unit (pulse).
006 (06h)	Position command frequency B	Frequency of the position command received by the drive. Unit: Kpps. Applicable to PT / PR mode.
007 (07h)	Speed feedback B D1 Dec	Current motor speed. Unit: 0.1 rpm. This is the speed processed by the low-pass filter, which makes it more stable.
008 (08h)	Speed command (analog) B D2 Dec	Speed command from the analog channel. Unit: 0.01 Volt.
009 (09h)	Speed command (integrated) B	Integrated Speed command. Unit: 0.1 rpm. Source includes analog, register, or position loop.
010 (0Ah)	Torque command (analog) B D2 Dec	Torque command from the analog channel. Unit: 0.01 Volt.
011 (0Bh)	Torque command (integrated) B	Integrated Torque command. Unit: percentage (%). Source includes analog, register, or speed loop.
012 (0Ch)	Average load rate B	Average load rate (moving average every 20 ms) from the drive. Unit: percentage (%).
013 (0Dh)	Peak load rate B	Maximum load rate from the drive. Unit: percentage (%).
014 (0Eh)	DC Bus voltage B	Rectified capacitor voltage. Unit: Volt.
015 (0Fh)	Load inertia ratio B D1 Dec	Ratio of the load inertia to the motor inertia. Unit: 0.1 times.
016 (10h)	IGBT temperature B	Temperature of IGBT. Unit: °C.
017 (11h)	Resonance frequency B Dec	Resonance frequency of the system, consisting of two sets of frequencies: F1 and F2. When monitoring from the panel, press the SHIFT key to switch between F1 and F2: F2 displays zero decimal places; F1 displays 1 decimal place. When reading through communication (mapping parameter): Low word returns frequency F2. High word returns frequency F1.

8

Code	Variable name / property	Description
018 (12h)	Z phase offset B Dec	Offset value between motor position and Z phase; range: -4999 to +5000. When the motor position overlaps with Z phase, the value is 0; the greater the absolute value of this variable, the greater the offset.
019 (13h)	Mapping parameter content #1 B	Returns the value of P0.025 which is mapped by P0.035.
020 (14h)	Mapping parameter content #2 B	Returns the value of P0.026 which is mapped by P0.036.
021 (15h)	Mapping parameter content #3 B	Returns the value of P0.027 which is mapped by P0.037.
022 (16h)	Mapping parameter content #4 B	Returns the value of P0.028 which is mapped by P0.038.
023 (17h)	Mapping monitoring variable #1 B	Returns the value of P0.009 which is mapped by P0.017.
024 (18h)	Mapping monitoring variable #2 B	Returns the value of P0.010 which is mapped by P0.018.
025 (19h)	Mapping monitoring variable #3 B	Returns the value of P0.011 which is mapped by P0.019.
026 (1Ah)	Mapping monitoring variable #4 B	Returns the value of P0.012 which is mapped by P0.020.
028 (1Ch)	Alarm code Dec B	The alarm code displayed in P0.001.
032 (20h)	Position error (PUU)	Difference between the Position command after filtered and the position feedback. Unit: Pulse of User Unit (PUU).
033 (21h)	Position error (pulse)	Difference between the Position command after filtered and the position feedback. Unit: encoder unit (pulse).
035 (23h)	Rotary axis position command	Rotary axis position command at present. Unit: Pulse of User Unit (PUU).
038 (26h)	Voltage level of the battery	Voltage level of the battery in an absolute encoder. To display the voltage level, enable the absolute encoder setting (P2.069).
039 (27h)	DI status (integrated) Hex	Integrated DI status of the drive. Each bit corresponds to one DI channel. Source includes hardware channel or P4.007, which is determined by P3.006.
040 (28h)	DO status (hardware) Hex	Actual status from the DO hardware. Each bit corresponds to one DO channel.
041 (29h)	Status of the drive	Returns the value of P0.046. Refer to the description of P0.046.
049 (31h)	Pulse command CNT	Pulse counts from the pulse command (CN1).
050 (32h)	Speed command (integrated) D1 Dec	Integrated Speed command. Unit: 0.1 rpm. Source includes analog, register, or position loop.

Code	Variable name / property	Description
051 (33h)	Speed feedback (immediate) D1 Dec	Actual motor speed at present. Unit: 0.1 rpm.
052 (34h)	Speed feedback (filtered) D1 Dec	Actual motor speed at present (processed by the low-pass filter). Unit: 0.1 rpm.
053 (35h)	Torque command (integrated) D1 Dec	Integrated Torque command. Unit: 0.1%. Source includes analog, register, or speed loop.
054 (36h)	Torque feedback D1 Dec	Actual motor torque at present. Unit: 0.1%.
055 (37h)	Current feedback D2 Dec	Actual motor current at present. Unit: 0.01 ampere (Amp).
056 (38h)	DC Bus voltage D1 Dec	Rectified capacitor voltage. Unit: 0.1 Volt.
064 (40h)	Register of PR command endpoint	In PR mode, the endpoint of the Position command (Cmd_E).
065 (41h)	Register of PR command output	In PR mode, the accumulative output of the Position command after filtered.
067 (43h)	PR target speed	Target speed specified in the PR path. Unit: PPS (pulse per second).
068 (44h)	S-curve filter (input)	The input data of S-curve filter which is used to generate the S-curve filtering effect. It is effective in PR mode and the register Speed command.
069 (45h)	S-curve filter (output)	The output data of S-curve filter which is used to generate the S-curve filtering effect. It is effective in PR mode and the register Speed command.
072 (48h)	Speed command (analog) B D1 Dec	Speed command from the analog channel. Unit: 0.1 rpm.
076 (4Ch)	Speed command of PR contour	In PR mode, the trapezoidal speed curve programmed according to the target speed, acceleration & deceleration time, and displacement (before being processed by the S-curve filter). Unit: PPS (pulse per second).
091 (5Bh)	Rotary axis position feedback	Immediate feedback of the rotary axis position. Unit: Pulse of User Unit (PUU).
096 (60h)	Drive firmware version Dec	Includes 2 versions: DSP and CPLD. When monitoring from the panel, press the SHIFT key to switch between DSP and CPLD: DSP displays zero decimal places; CPLD displays 1 decimal place. When reading through communication (mapping parameter): Low word returns the DSP version number. High word returns the CPLD version number.
111 (6Fh)	Error code of the servo drive	Error code from the servo drive: control loop of the servo only, not including the motion controller.
123 (7Bh)	Value returned when monitoring by panel	Monitoring value displayed when returned to the monitoring panel.
-80	Encoder communication error rate	When this value continues to increase, it indicates that there is communication interference. In an interference-free environment, this value should not change.
-91	Overload (AL006) protection counter	Displays the condition of motor overload during operation. The default is 1600; when the value reaches 8320, AL006 occurs.
-111	Regeneration error (AL005) protection counter	When the value of the regeneration counter reaches 100%, AL005 occurs.
-124	Encoder temperature	Monitor the encoder temperature.

Code	Variable name / property	Description
-169	Regenerative resistor overload (AL086) protection counter	The average power consumption (unit: %) of the regenerative resistor at the time when the energy of the servo drive capacitor is released to the regenerative resistor. When the value reaches 100%, AL086 occurs.
-207	Regenerative resistor power consumption	The power consumption (unit: %) of the regenerative resistor at the time when the energy of the servo drive capacitor is released to the regenerative resistor.
-223	Servo drive overload (AL02C) protection counter	Displays the condition of drive overload during motor operation. When the value reaches 100, AL02C occurs.
-246	Blocked rotor protection (AL02F) counter	Displays the condition of drive overload when the motor speed is maintained at 10 rpm and below or the rotor is blocked. When the value reaches 100, AL02F occurs.
-248	Alarm reset delay time	When an alarm occurs, this value counts down to 0 from the time (unit: ms) set in P2.123. The alarm can be reset only when this value reaches 0. Affected alarms: AL005, AL006, AL016, AL02C, AL02F, AL085, and AL086.

9 Modbus Communication

This chapter describes the Modbus communication that you use for reading and writing general parameters. The details of ASCII and RTU modes are also provided in this chapter.

9.1 Modbus communication interface (hardware) ····· 9-2
9.2 RS-485 communication parameters ····· 9-4
9.3 Modbus communication protocol ····· 9-4
9.4 Writing and reading communication parameters ····· 9-14
9.5 RS-485 communication specification ····· 9-15

9.1 Modbus communication interface (hardware)

The servo drive supports RS-485 and RS-232 serial communication that you can use to access and change the parameters of the servo system.

9

Wiring for RS-485

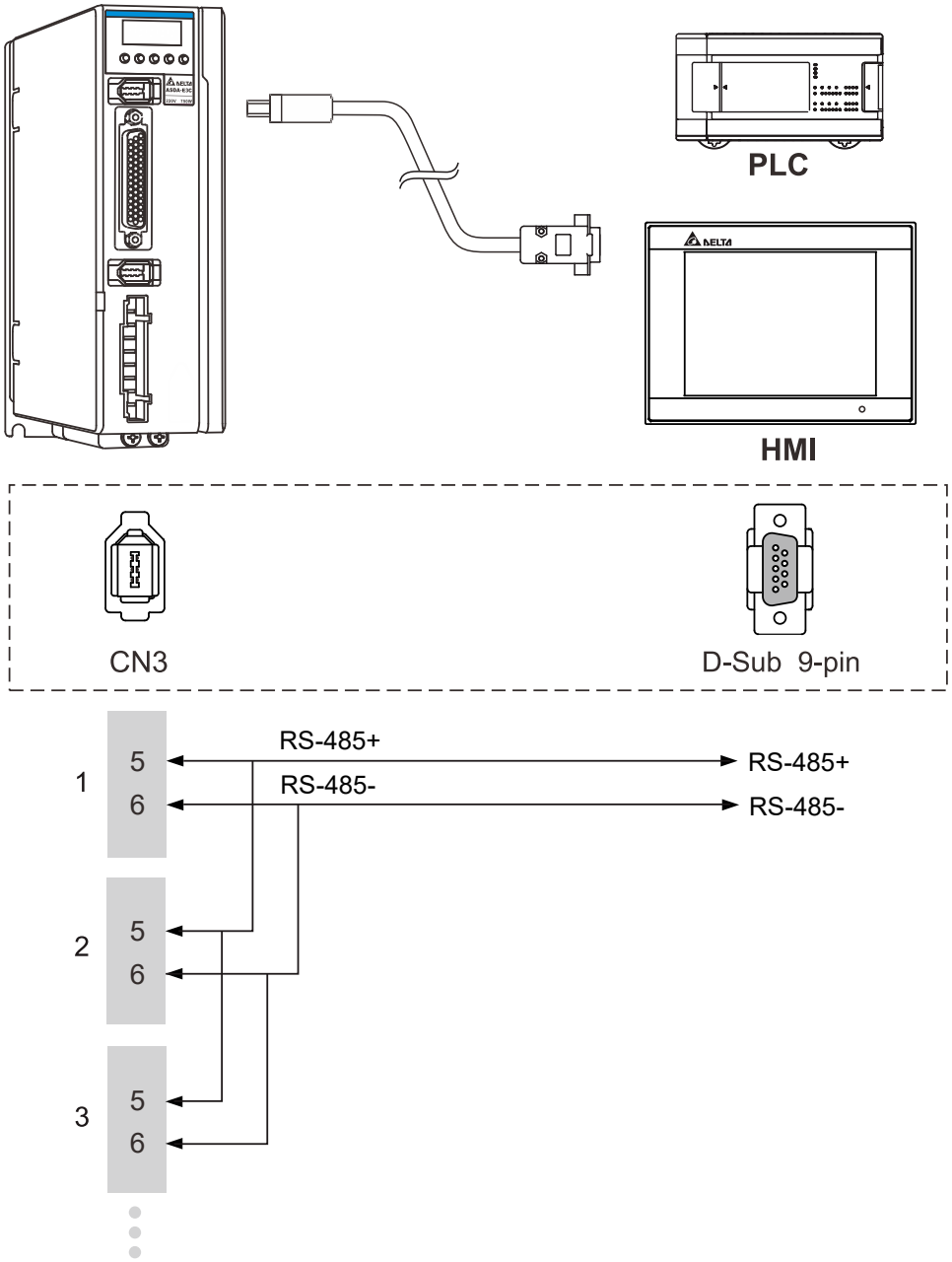

Note:

1. The cable length can be up to 100 meters when the servo drive is installed in a low-noise environment. If the required transmission speed is over 38,400 bps, a cable length of 15 meters or less is recommended to ensure data transmission accuracy.
2. The gray-shaded numbers in the preceding figure represent the pin numbers of the connectors.
3. When using RS-485, you can connect up to 32 servo drives. Install a repeater to connect up to 127 servo drives.
4. When using RS-485 Modbus communication to connect two or more servo drives in series, the interval between each communication command should be at least 160 ms.
5. Refer to Wiring for the CN3 connector in Chapter 3.

Wiring for RS-232

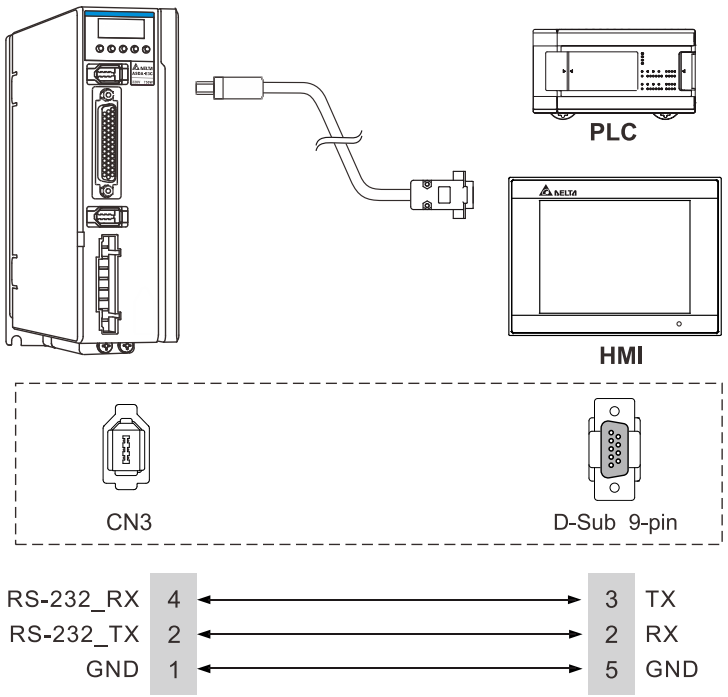

Note:
1. The cable length can be up to 15 meters when the servo drive is installed in a low-noise environment. If the required transmission speed is over 38,400 bps, a cable length of 3 meters or less is recommended to ensure data transmission accuracy.
2. The gray-shaded numbers in the preceding figure represent the pin numbers of the connectors.
3. When using RS-232, you can connect one device to only one servo drive at a time.

9.2 RS-485 communication parameters

9

The servo drive requires setting these parameters for using Modbus communication: P3.000 (Address), P3.001 (Transmission speed), P3.002 (Modbus communication protocol), and P3.005 (Modbus communication). On the other hand, P3.003 (Modbus communication error handling), P3.004 (Modbus communication timeout), P3.006 (Digital input (DI) control switch), and P3.007 (Modbus communication response delay time) are optional parameters. Refer to Chapter 8 for detailed descriptions of the relevant parameters.

9.3 Modbus communication protocol

There are two modes of Modbus network communication: ASCII (American Standard Code for Information Interchange) and RTU (Remote Terminal Unit); set P3.002 to the required communication protocol. The servo drive supports these functions: reading multiple words (03H), writing a single word (06H), and writing multiple words (10H). Refer to the following descriptions.

Code description

ASCII mode:

In ASCII mode, data is transmitted in ASCII (American Standard Code for Information Interchange) format. For instance, to transmit “64H” between the master and slave, the ASCII codes “36H” and “34H” are sent to represent “6” and “4” respectively.

The corresponding ASCII codes for the numbers 0 to 9 and the characters A to F are as follows:

Symbol	‘0’	‘1’	‘2’	‘3’	‘4’	‘5’	‘6’	‘7’
ASCII code	30H	31H	32H	33H	34H	35H	36H	37H
Symbol	‘8’	‘9’	‘A’	‘B’	‘C’	‘D’	‘E’	‘F’
ASCII code	38H	39H	41H	42H	43H	44H	45H	46H

RTU mode:

In RTU mode, each data frame consists of an 8-bit hexadecimal character, which is more efficient in data transmission than ASCII mode because it does not require conversion. For instance, to transmit “64H” between the master and slave, “64H” is directly sent.

Characters are encoded into the following frames and transmitted serially. The methods for checking each type of frame are as follows.

ASCII mode:

10-bit data frame (for 7-bit character)

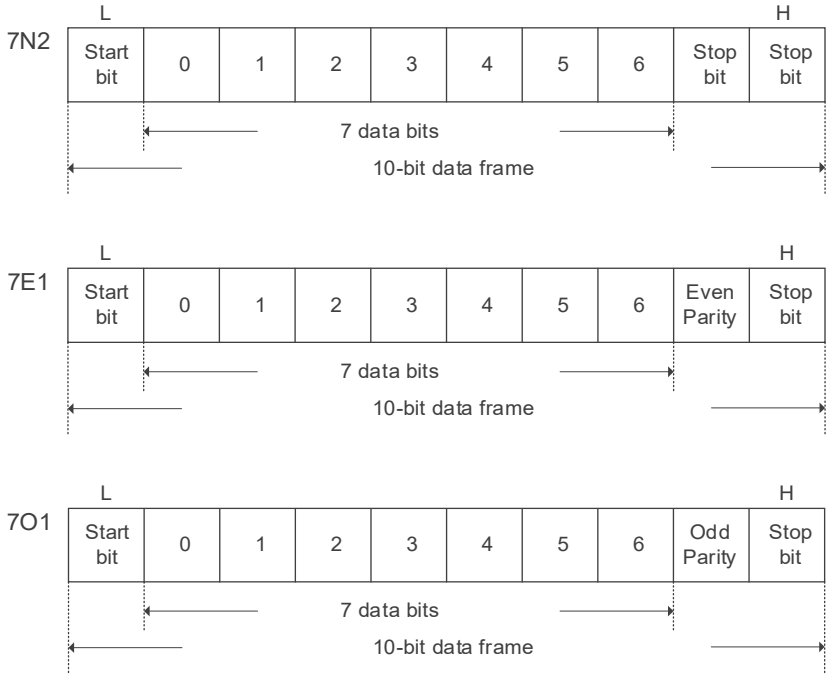

RTU mode:

11-bit data frame (for 8-bit character)

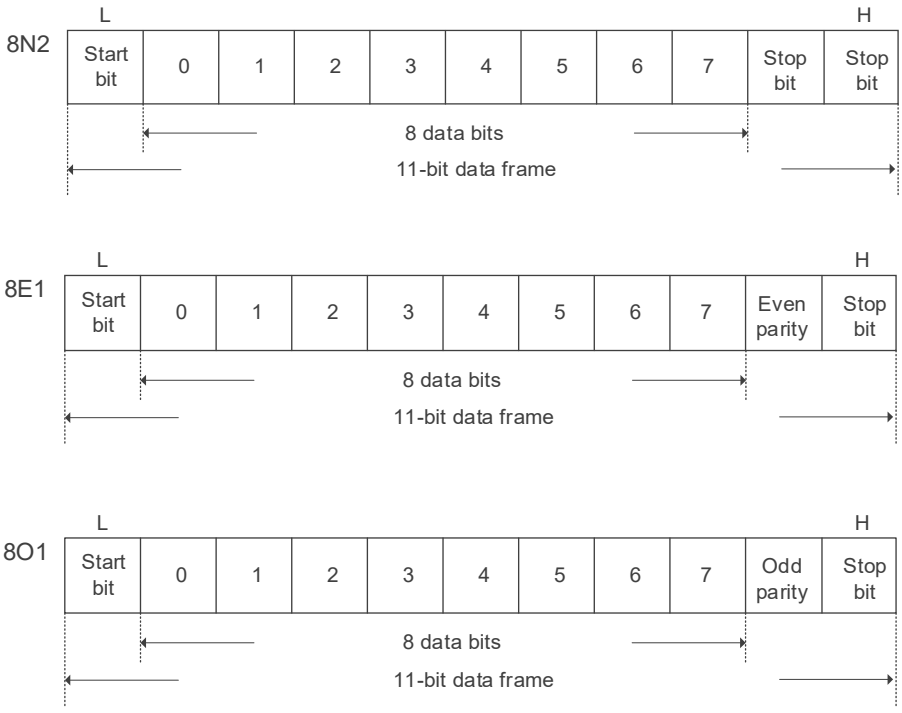

Communication data structure

Definitions for the data frames in the two modes are as follows:

9

ASCII mode:

Start	Start character ':' (3AH)
Slave Address	Communication address: 1 byte, consisting of 2 ASCII codes (ADR)
Function	Function code: 1 byte, consisting of 2 ASCII codes (CMD)
Data (n-1)	Data content: n word(s) = 2n bytes (consists of 4n ASCII codes), n ≤ 10
…….	
Data (0)	
LRC	Error checking: 1 byte, consisting of 2 ASCII codes
End 1	End code 1: (0DH)(CR)
End 0	End code 0: (0AH)(LF)

RTU mode:

Start	A silent interval of more than 10 ms
Slave Address	Communication address: 1 byte
Function	Function code: 1 byte
Data (n-1)	Data content: n word(s) = 2n bytes, n ≤ 10
…….	
Data (0)	
CRC	Error checking: 2 bytes
End 1	A silent interval of more than 10 ms

Example 1: function code 03H, reading multiple words

In the following example, the master issues a read command to the first slave.

The slave reads two consecutive words starting from the start data address 0200H. In the response message from the slave, the content of address 0200H is 00B1H and the content of address 0201H is 1F40H. A maximum of 10 words can be read in one message, which corresponds to 5 consecutive parameter data.

ASCII mode:

Command message (master):

Start	':'
Slave Address	'0'
	'1'
Function	'0'
	'3'
Start Data Address	'0'
	'2'
	'0'
	'0'
Data Quantity (in words)	'0'
	'0'
	'0'
	'2'
LRC	'F'
	'8'
End 1	(0DH)(CR)
End 0	(0AH)(LF)

Response message (slave):

Start	':'
Slave Address	'0'
	'1'
Function	'0'
	'3'
Data Quantity (in bytes)	'0'
	'4'
Content of Start Data Address 0200H	'0'
	'0'
	'B'
	'1'
Content of the 2nd Data Address 0201H	'1'
	'F'
	'4'
	'0'
LRC	'E'
	'8'
End 1	(0DH)(CR)
End 0	(0AH)(LF)

RTU mode:

Command message (master):

Slave Address	01H
Function	03H
Start Data Address	02H (High)
	00H (Low)
Data Quantity (in words)	00H
	02H
CRC (Check Low)	C5H (Low)
CRC (Check High)	B3H (High)

Response message (slave):

Slave Address	01H
Function	03H
Data Quantity (in bytes)	04H
Content of Start Data Address 0200H	00H (High)
	B1H (Low)
Content of the 2nd Data Address 0201H	1FH (High)
	40H (Low)
CRC (Check Low)	A3H (Low)
CRC (Check High)	D4H (High)

Note: a silent interval of 10 ms is required before and after each transmission in RTU mode.

9

Example 2: function code 06H, writing a single word

In the following example, the master issues a write command to the first slave.

The slave writes data 0064H to address 0200H and sends a response message to the master after the writing is complete.

ASCII mode:

Command message (master):

Start	':'
Slave Address	'0'
	'1'
Function	'0'
	'6'
Start Data Address	'0'
	'2'
	'0'
	'0'
Data Content	'0'
	'0'
	'6'
	'4'
LRC	'9'
	'3'
End 1	(0DH)(CR)
End 0	(0AH)(LF)

Response message (slave):

Start	':'
Slave Address	'0'
	'1'
Function	'0'
	'6'
Start Data Address	'0'
	'2'
	'0'
	'0'
Data Content	'0'
	'0'
	'6'
	'4'
LRC	'9'
	'3'
End 1	(0DH)(CR)
End 0	(0AH)(LF)

RTU mode:

Command message (master):

Slave Address	01H
Function	06H
Start Data Address	02H (High)
	00H (Low)
Data Content	00H (High)
	64H (Low)
CRC (Check Low)	89H (Low)
CRC (Check High)	99H (High)

Response message (slave):

Slave Address	01H
Function	06H
Start Data Address	02H (High)
	00H (Low)
Data Content	00H (High)
	64H (Low)
CRC (Check Low)	89H (Low)
CRC (Check High)	99H (High)

Note: a silent interval of 10 ms is required before and after each transmission in RTU mode.

Example 3: function code 10H, writing multiple words

In the following example, the master issues a write command to the first slave.

The slave writes two words, 0BB8H and 0000H, starting from the start data address 0112H. In other words, 0BB8H is written into address 0112H and 0000H is written into address 0113H. A maximum of 8 words can be written in one message, which corresponds to 4 consecutive parameter data. The slave sends a response message to the master after the writing is complete.

ASCII mode:

Command message (master):

Start	':'
Slave Address	'0'
	'1'
Function	'1'
	'0'
Start Data Address	'0'
	'1'
	'1'
	'2'
Data Quantity (in words)	'0'
	'0'
	'0'
	'2'
Data Quantity (in bytes)	'0'
	'4'
Content of the 1st Data Frame	'0'
	'B'
	'B'
	'8'
Content of the 2nd Data Frame	'0'
	'0'
	'0'
	'0'
LRC	'1'
	'3'
End 1	(0DH)(CR)
End 0	(0AH)(LF)

Response message (slave):

Start	':'
Slave Address	'0'
	'1'
Function	'1'
	'0'
Start Data Address	'0'
	'1'
	'1'
	'2'
Data Quantity (in words)	'0'
	'0'
	'0'
	'2'
LRC	'D'
	'A'
End 1	(0DH)(CR)
End 0	(0AH)(LF)

9

RTU mode:

Command message (master):

Slave Address	01H
Function	10H
Start Data Address	01H (High)
	12H (Low)
Data Quantity (in words)	00H (High)
	02H (Low)
Data Quantity (in bytes)	04H
Content of the 1st Data Frame	0BH (High)
	B8H (Low)
Content of the 2nd Data Frame	00H (High)
	00H (Low)
CRC (Check Low)	FCH (Low)
CRC (Check High)	EBH (High)

Response message (slave):

Slave Address	01H
Function	10H
Start Data Address	01H (High)
	12H (Low)
Data Quantity (in words)	00H (High)
	02H (Low)
CRC (Check Low)	E0H (Low)
CRC (Check High)	31H (High)

Note: a silent interval of 10 ms is required before and after each transmission in RTU mode.

LRC and CRC transmission error checking

In ASCII mode, the error checking method is LRC (Longitudinal Redundancy Check). In RTU mode, the error checking method is CRC (Cyclic Redundancy Check). See the following details.

LRC (ASCII mode):

Start	':'
Slave Address	'7'
	'F'
Function	'0'
	'3'
Start Data Address	'0'
	'5'
	'C'
	'4'
Data Quantity (in words)	'0'
	'0'
	'0'
	'1'
LRC	'B'
	'4'
End 1	(0DH)(CR)
End 0	(0AH)(LF)

The LRC value is calculated by adding all the bytes, rounding down the carry, and taking the two's complement.

In the preceding example:

7FH + 03H + 05H + C4H + 00H + 01H = 14CH, round down the carry 1 and take 4CH.

The two's complement of 4CH is B4H.

9

CRC (RTU mode):

To calculate the CRC value:

Step 1: load a 16-bit register with the content of FFFFH, which is called the CRC register.

Step 2: perform (The low byte of the CRC register) XOR (The first byte of the command), and save the result in the CRC register.

Step 3: check the least significant bit (LSB) of the CRC register. If the bit is 0, shift the register value one bit to the right. If the bit is 1, shift the register value one bit to the right and perform (CRC register value) XOR (A001H). Repeat this step 8 times.

Step 4: repeat Steps 2 and 3 until all bytes have been processed. The content of the CRC register is the CRC value.

After calculating the CRC value, fill in the low byte of the CRC value in the command message, and then the high byte. For example, if the result of CRC calculation is 3794H, put 94H in the message and then 37H, as shown in the following table.

ADR	01H
CMD	03H
Start Data Address	01H (High)
	01H (Low)
Data Quantity (in words)	00H (High)
	02H (Low)
CRC (Check Low)	94H (Low)
CRC (Check High)	37H (High)

CRC example code:

The following illustrates how to generate the CRC value in C. The function requires two parameters:

```
unsigned char* data;
unsigned char length
//The function returns the CRC value in unsigned integer.
unsigned int crc_chk(unsigned char* data, unsigned char length) {
     int j;
     unsigned int reg_crc=0xFFFF;

     while( length-- ) {
          reg_crc^= *data++;
          for (j=0; j<8; j++ ) {
               if( reg_crc & 0x01 ) { /*LSB(bit 0 ) = 1 */
                    reg_crc = (reg_crc >> 1)^0xA001;
               } else {
                    reg_crc = (reg_crc>>1);
               }
          }
     }
     return reg_crc;
}
```

Example of a PC communication program:

```
#include<stdio.h>
#include<dos.h>
#include<conio.h>
#include<process.h>
#define PORT 0x03F8/*  the address of COM 1  */
#define THR 0x0000
#define RDR 0x0000
#define BRDL 0x0000
#define IER 0x0001
#define BRDH 0x0001
#define LCR 0x0003
#define MCR 0x0004
#define LSR 0x0005
#define MSR 0x0006
unsigned char rdat[60];
/* read 2 data from address 0200H of ASD with address 1 */
unsigned char
tdat[60]={':','0','1','0','3','0','2','0','0','0','0','0','2','F','8','\r','\n'};
void main() {
int I;
outportb(PORT+MCR,0x08);          /*  Interruption enable  */
outportb(PORT+IER,0x01);               /* Interruption as data in  */
outportb(PORT+LCR,( inportb(PORT+LCR) | 0x80 ) );
/*  the BRDL/BRDH can be access as LCR.b7 == 1  */
outportb(PORT+BRDL,12);
outportb(PORT+BRDH,0x00);
outportb(PORT+LCR,0x06);          /* set protocol
                                       <7,E,1> = 1AH,      <7,O,1> = 0AH
                                       <8,N,2> = 07H       <8,E,1> = 1BH
                                       <8,O,1> = 0BH                     */

for( I = 0; I<=16; I++ ) {
     while( !(inportb(PORT+LSR) & 0x20) ); /*  wait until THR empty  */
     outportb(PORT+THR,tdat[I]);           /*  send data to THR  */
}
I = 0;
while( !kbhit() ) {
     if( inportb(PORT+LSR)&0x01 ) {  /*  b0==1, data is read  */
          rdat[I++] = inportb(PORT+RDR); /*   read data from RDR  */
     }
}
}
```

9.4 Writing and reading communication parameters

Refer to Chapter 8 for the descriptions of all the servo drive parameters. The following describes the parameters that you can write or read through communication.

The servo drive parameters are divided into eight groups: Group 0 (Monitoring parameters), Group 1 (Basic parameters), Group 2 (Extension parameters), Group 3 (Communication parameters), Group 4 (Diagnosis parameters), Group 5 (Motion control parameters), and Group 6 and Group 7 (PR parameters). All parameters (except for the read-only ones) can be written through communication; all parameters (Groups 0 to 7) can be read through communication.

Note the following additional details:

P3.001: after a new transmission speed is set, the next data is written at the new transmission speed.

P3.002: after a new communication protocol is set, the next data is written with the new communication protocol.

P4.005: servo motor JOG control. Refer to Chapter 8 for details.

P4.006: force digital output (DO) contact control. You can use this parameter to test the DO contacts. First set P2.008 to 406, and then set P4.006 to 0x0001, 0x0002, 0x0004, 0x0008, 0x0010, and 0x0020 to test DO1, DO2, DO3, DO4, DO5, and DO6 respectively. Afterwards, set P4.006 to 0x0000 to complete the test.

P4.010: hardware calibration options. First set P2.008 to 20 (14H in hexadecimal format) to enable this function.

P4.011 - P4.021: hardware offset calibration. The parameters were adjusted before delivery, so changing the parameter settings is not recommended. If you need to modify these parameters, first set P2.008 to 22 (16H in hexadecimal format) to enable this function.

9.5 RS-485 communication specification

Compared with RS-232, RS-485 communication can carry out one-to-many transmission and has better noise immunity. RS-485 uses a balanced transmission line for signal reception and transmission. The transmitter converts the TTL signal into a differential signal and then sends it to the receiver. The receiver receives the differential signal and then converts it back to the TTL signal. Since the transmission process uses the differential signal, it has better noise immunity. However, there are still restrictions on the use of RS-485 communication, so note the following when wiring.

- Number of stations
  CN3 supports connecting up to 32 servo drives. Install a repeater to connect up to 127 servo drives.

- Transmission distance
  The longer the transmission distance, the slower the transmission speed. The cable length can be up to 100 meters when the servo drive is installed in a low-noise environment. If the required transmission speed is over 38,400 bps, a cable length of 15 meters or less is recommended to ensure data transmission accuracy.

- Transmission line
  The quality of the transmission line greatly affects the signal transmission; interference during the transmission process may result in data loss. It is suggested that you use a shielded twisted-pair cable as it has a metal shield and a grounding wire, which ensures better anti-interference ability.

- Topology
  For topology, the closer to the master station, the more stable the transmitted signal. RS-485 supports bus topology. The transmission line must be connected from the first station to the second station, then from the second station to the third station, and so on until the last station. RS-485 does not support star or ring topology.

- Terminal resistor
  In the communication transmission process, if the impedance is not continuous, it causes signal reflection and signal distortion. This usually happens to the device that is configured at the end of the transmission line. If the impedance is small or even 0Ω, the signal will be reflected. To solve this problem, terminate the transmission line with a resistor equal to the cable's characteristic impedance, which is called a terminal resistor. In general, the transmission line used in the RS-485 signal transmission circuit is a twisted-pair cable, and its characteristic impedance is about 120Ω, so the impedance of the terminal resistor is also 120Ω.

- Anti-interference measures

  In the signal transmission process, if there is interference, it may result in signal distortion. Therefore, it is important to eliminate interference. The measures are as follows:

  1. Add a terminal resistor.
  2. Check if the servo drive is installed in a high magnetic field environment. If so, keep it as far away as possible.
  3. Use a shielded twisted-pair cable for the transmission line.
  4. When wiring, separate the high voltage power cables from the signal cables.
  5. Use a ferrite ring at the power input.
  6. Add IEC 60384-14 certified X capacitor(s) and Y capacitors at the power input.

10 Absolute System

This chapter introduces the absolute servo system, including the installation of the battery box and the operating procedures for initializing the system for the first time.

10.1 Battery specifications ····· 10-3
10.2 Installation ····· 10-5
10.2.1 Installing the battery box in the servo system ····· 10-5
10.2.2 Installing and replacing a battery ····· 10-6
10.3 System initialization and operating procedures ····· 10-7
10.3.1 System initialization ····· 10-7
10.3.2 Pulse number ····· 10-8
10.3.3 PUU number ····· 10-9
10.3.4 Establishing the absolute origin position ····· 10-10
10.3.4.1 Establishing the absolute origin position with DI/DO ····· 10-10
10.3.4.2 Establishing the absolute origin position with parameters ····· 10-10
10.3.4.3 Establishing the absolute origin position with the PR homing function ····· 10-10
10.3.5 Reading the absolute position ····· 10-11
10.3.5.1 Reading the absolute position with DI/DO ····· 10-11
10.3.5.2 Reading the absolute position through communication ····· 10-14

10

Important

An absolute servo system includes a servo drive, an absolute motor, and a battery box. The battery supplies power to the system so that the encoder continues operating when the power to the servo drive is off. In addition, the absolute encoder can continuously record the motor's actual position at any time, even when the motor shaft is rotated after the power is off. The absolute servo system must use an absolute motor; if an incremental motor is used and the absolute function is enabled (P2.069.X = 1), AL069 occurs.

When using an absolute motor, make sure the motor speed is lower than 250 rpm at the moment when the power is on. When the encoder is operating under battery power, make sure the maximum speed of the motor does not exceed 200 rpm.

The model number helps you identify whether the motor is an absolute motor:

ECM-E3 series servo motor

ECM - E3 □ - □ □ □ □ □ □ □ □ □
└ A / P: absolute motor

Correctly connect the battery box to the encoder. One servo drive uses a single battery box; two servo drives can share a dual battery box. Use the specified Delta encoder cable to connect to the battery box.

10.1 Battery specifications

Precautions

Carefully read and follow these safety precautions. Use batteries in accordance with the specifications as follows to avoid damage or danger.



- Install the battery in an environment free of water vapor, corrosive gas, and flammable gas.
- Properly store the batteries to avoid short-circuiting.
- Do not short-circuit the positive and negative terminals of the batteries, or install the batteries in reverse direction.
- Do not use new and used batteries together to avoid losing power or shortening the life of the new batteries. Replacing all batteries with new ones is recommended.
- The battery box J1 port connects to the battery and J2 port connects to the battery box connection wire on the encoder cable.
- The current consumption is nearly 0 when the absolute origin position is not established. Once the absolute origin position is established, the battery starts losing power. To avoid battery power consumption, it is recommended that you disconnect the battery or do not establish the absolute origin position when transporting the machine.
- Follow the instructions in the manual when installing and wiring the battery box to avoid danger.
- Use the battery provided by Delta, or the absolute function may not work normally.



- Do not place the battery in fire or in an environment with the ambient temperature over 100°C (212°F), or this may cause a fire or an explosion.
- The batteries are non-rechargeable. Do not charge the batteries as this may cause an explosion.
- Do not directly weld on the surface of the battery.

Battery specifications

Item	Li/SOCl2 Cylindrical Battery
Delta model number	ASD-CLBT0100
International standard size	AA
Nominal voltage	3.6V
Nominal capacity	2700 mAh
Maximum continuous discharge current	100 mA
Maximum pulse current	200 mA
Dimensions (D x H)	14.5 x 50.5 mm
Weight	Approx. 19 g
Ambient operating temperature	-40°C to +85°C (-40°F to +185°F)

10

Battery life

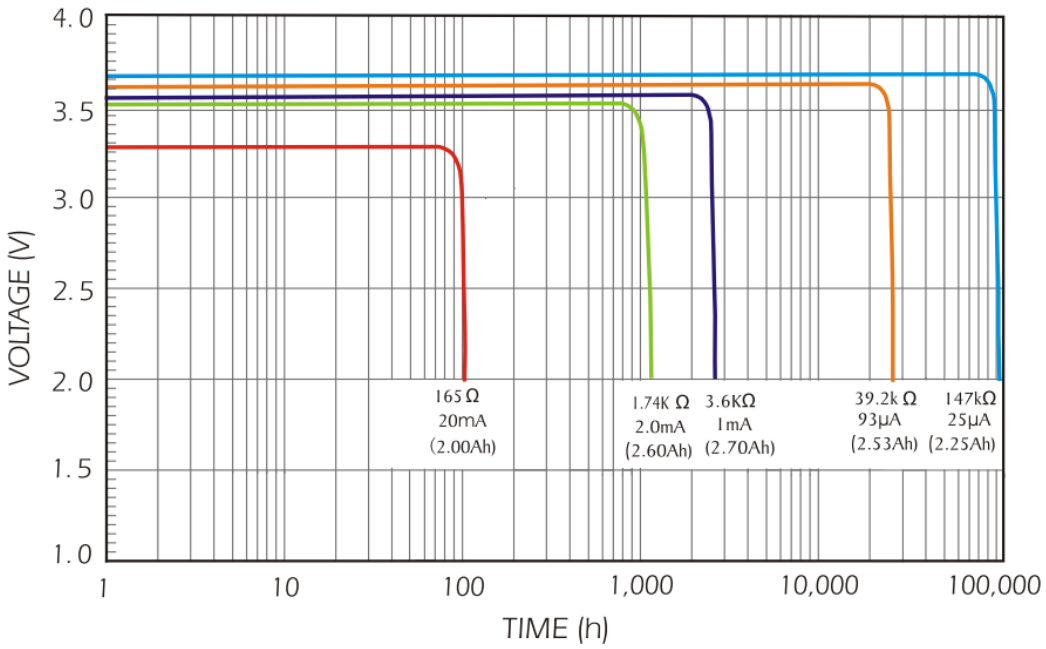

Source: *EVE Energy Co. ER14505 Discharge Characteristics*

(1) The preceding figure illustrates the discharge current curves measured in the constant current test. According to the five curves, if the battery voltage is kept at 3V or higher, the battery life expectancy is as shown in the following table. Therefore, a battery voltage below 3.1V is considered undervoltage for an absolute encoder.

Motor	Current consumption (μA) when the encoder operates under battery power	Battery life expectancy (month)
ECM-E3□-□A□□□□□□□ ECM-E3□-□P□□□□□□□	30	87.5

(2) The battery voltage remains ≥ 3.6V for up to 5 years when the battery is stored in a dry place at room temperature.

Note: the battery life expectancy is measured with a test using a servo drive, a motor, and a single battery.

10.2 Installation

- For the pin assignments of the absolute encoder cables, refer to Section 3.3.
- For selecting the battery box and the absolute encoder cables, refer to Appendix B.

10.2.1 Installing the battery box in the servo system

WARNING

- DO NOT connect to Pin 3 and Pin 4 of the servo drive CN2 connector. These pins are for internal use only. Wiring them will cause damage to the internal circuit.
- When an absolute encoder is used, the battery supplies power directly to the encoder, so wiring the battery wires to the CN2 connector of the servo drive is not required.

Wiring example: single battery box (standard wiring)

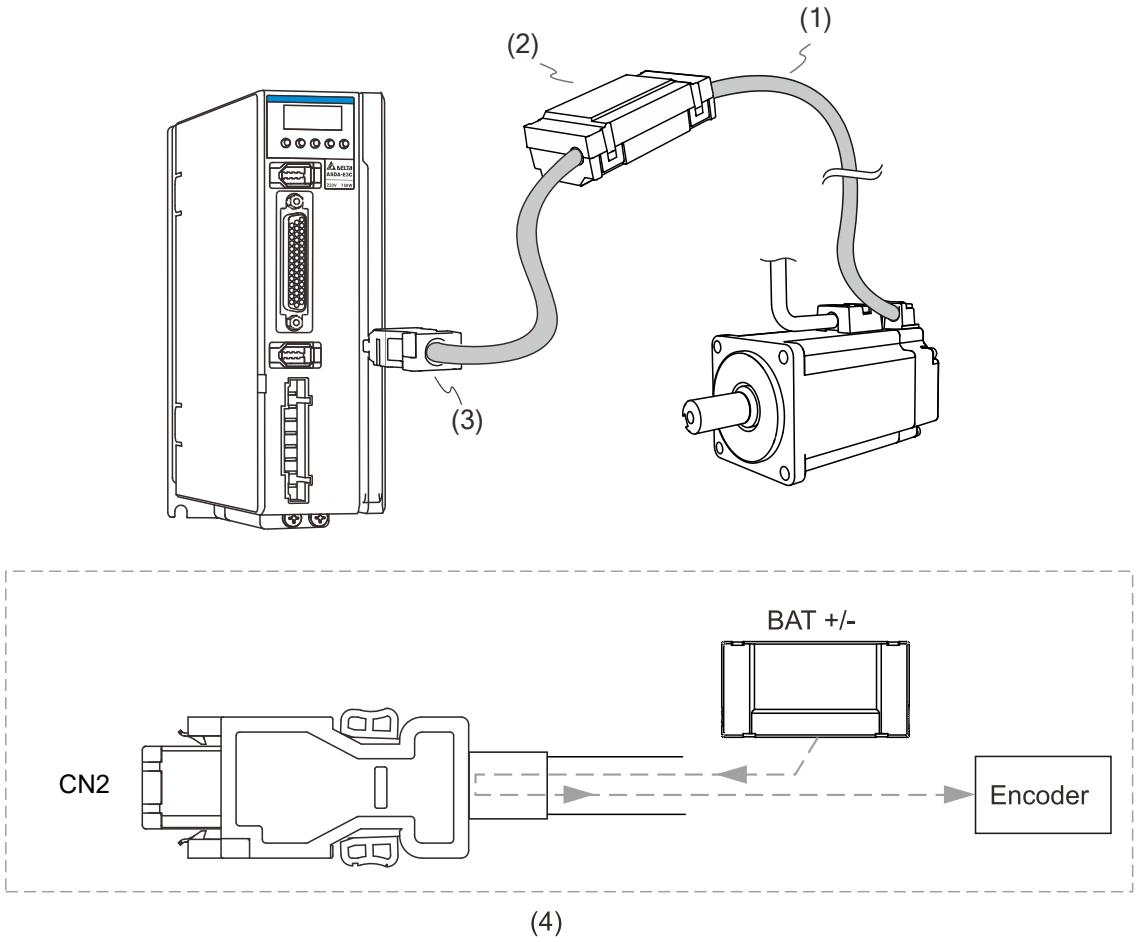

(1) Absolute encoder cable; (2) Single battery box; (3) CN2 connector; (4) Battery box wiring

10.2.2 Installing and replacing a battery

When the servo drive displays the alarm AL061, it means the voltage of the absolute encoder is too low. In this case, you can set P0.002 to 38 to read the voltage level of the battery. If the displayed value is lower than 31 (indicating that the voltage is below 3.1V), replace the battery immediately to avoid data loss.

When the battery voltage is below 2.9V, the motor's position record may be lost. If the servo drive displays the alarm AL060, it will then display AL06A after the battery is replaced. In this case, you need to re-establish the absolute origin position.

Caution: replace the battery only when the power to the servo drive is on to avoid absolute position data loss.

Single battery box

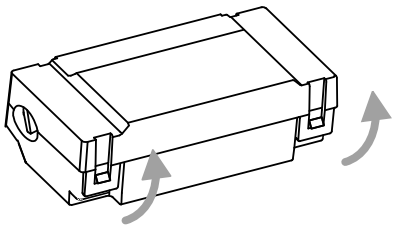

Step 1:
Release the snap-fit tabs on both sides and remove the battery box cover.

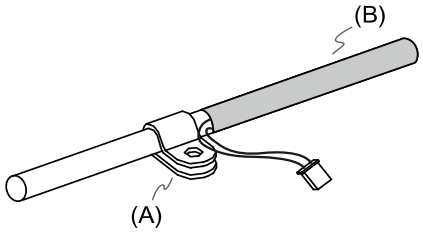

Step 2:
Attach the cable clamp to the encoder cable. Note that the cable clamp should be placed as close as possible to the heat shrink.

(A) Cable clamp
(B) Heat shrink

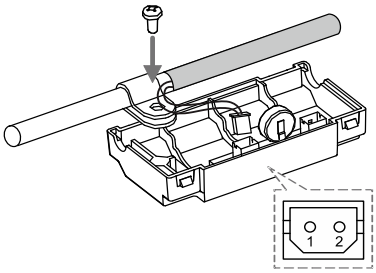

Step 3:
Tighten a cable clamp screw to secure the clamp to the battery box, and then connect the battery box connection wire to the J2 port on the battery box.

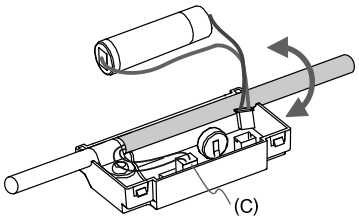

Step 4:
Install a new battery, and then connect the battery wire to the J1 port on the battery box.
Replace the battery only when the power to the servo drive is on. Do not remove the battery box connection wire that connects to the servo drive, or the system data may be lost.

(C) Battery box connection wire

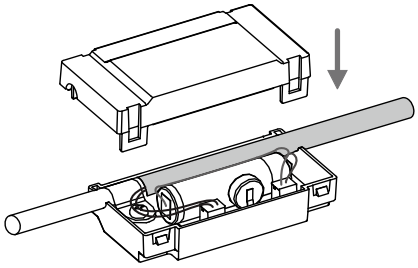

Step 5:
Place the wires into the box and fit the cover, and then the battery replacement and battery box installation are complete.

10.3 System initialization and operating procedures

10.3.1 System initialization

When the servo system resumes operation after power cycling, the controller can acquire the motor's current absolute position either through communication or with DI/DO. Delta's absolute system provides two types of position value for the controller: pulse and PUU.

- When the absolute system is initialized for the first time, the position system is not established and thus AL06A occurs. Clear the alarm by setting up the position system.
- If no power is supplied to the servo drive, and the position data is lost because of low battery voltage or battery power loss, AL060 occurs when the servo drive is powered on.
- In the absolute system, the position data has to be within a specific range.
  AL062 occurs when the number of motor revolutions exceeds the range of -32,768 to +32,767.
  AL289 occurs when the position value in PUU exceeds the range of -2,147,483,648 to +2,147,483,647.
- AL062 and AL289 are enabled by default. you can use P2.070 [Bit 2] to set whether to show AL062 or AL289 when the absolute position system overflows (the number of revolutions or the PUU number exceeds the preceding ranges). This function is for systems that operate in a single direction and use incremental commands.

Steps for system initialization:

1. Establish the absolute origin position with DI/DO, parameters, or the PR homing function. When the position setting is complete, AL06A or AL060 is automatically cleared. The controller can establish the absolute origin position in pulses or in PUU.
2. When the system is power cycled, the controller can access the motor's absolute position either with DI/DO or through communication. Based on the setting of P2.070, the controller can read the number of revolutions plus the pulse number within a single turn (refer to Section 10.3.2) or the position value in PUU (refer to Section 10.3.3).

10.3.2 Pulse number

If you want P0.051 to show the number of revolutions, and P0.052 to show the pulse number within a single turn, first set P2.070 [Bit 1] to 1, and then set P0.049.X to 1. Otherwise, P0.051 and P0.052 cannot show the actual values. Refer to Section 10.3.5.2 for detailed descriptions and usage.

When the motor rotates clockwise, the number of revolutions is defined as a negative value. When the motor rotates counterclockwise, the number of revolutions is defined as a positive value. The countable number of revolutions is between -32,768 and +32,767. AL062 occurs once the number of revolutions overflows (i.e., the number exceeds the range). To clear the alarm, you must re-establish the absolute origin position. If P2.070 [Bit 2] has been set not to show any overflow warning, then the system ignores the overflow.

If the motor rotates counterclockwise and the number of revolutions reaches +32,767, the value jumps to -32,768 in the next turn and keeps increasing from -32,768 to +32,767. If the motor rotates clockwise and the number of revolutions reaches -32,768, the value jumps to +32,767 in the next turn and keeps decreasing from +32,767 to -32,768.

In addition, there are 16,777,216 pulses (0 to 16,777,215) in one motor revolution. Pay attention to the motor's rotation direction. You can read the number of revolutions and the pulse number within a single turn either through communication or with DI/DO.

Total pulse number = m (number of revolutions) x 16,777,216 + pulse number within a single turn (0 to 16,777,215).

The conversions between pulse number and PUU are as follows:

When P1.001.Z = 0: the PUU number when power on = pulse number x $\frac{P1.045}{P1.044}$ + P6.001.

When P1.001.Z = 1: the PUU number when power on = (-1) x pulse number x $\frac{P1.045}{P1.044}$ + P6.001.

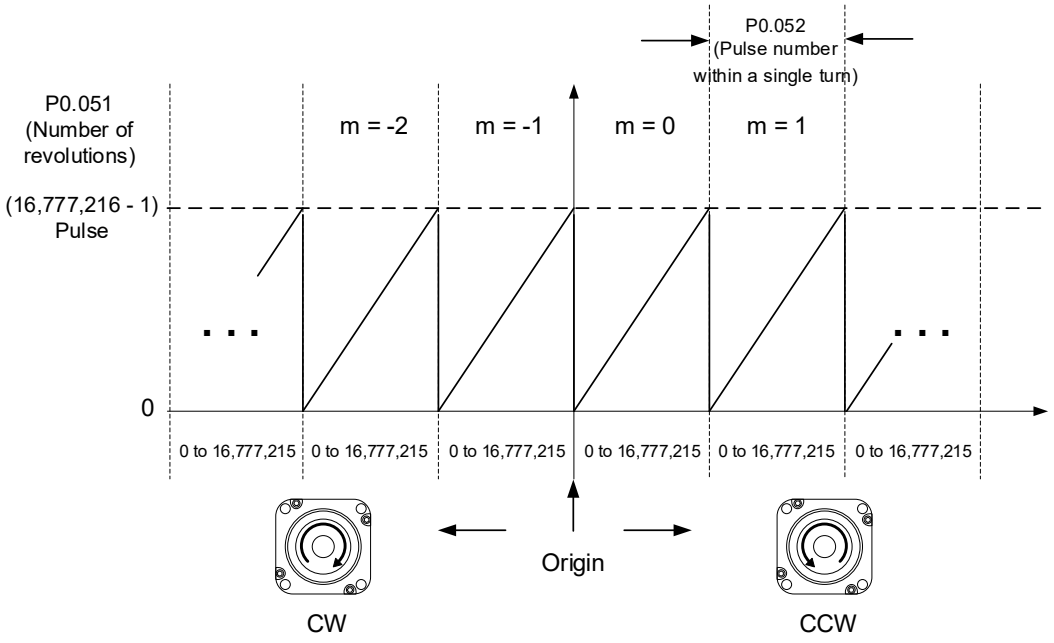

Figure 10.3.2.1 Absolute position in pulses

10.3.3 PUU number

The PUU number is a 32-bit absolute position data with a positive or negative sign. When the motor rotates in the positive direction, the PUU number increases; when the motor rotates in the negative direction, the PUU number decreases. The motor rotation direction (positive / negative) is defined by P1.001.Z; rotating clockwise does not necessarily mean the motor rotates in the positive direction.

If the motor keeps rotating in the same direction and the number of revolutions exceeds the range of -32,768 to +32,767, the servo drive generates AL062. If the motor's PUU number exceeds the range of -2,147,483,648 to +2,147,483,647, the servo drive generates AL289. When an absolute encoder overflow occurs, re-establish the absolute origin position to clear the alarm. You can set P2.070 [Bit 2] to determine whether the servo drive generates AL062 or AL289 when an overflow occurs.

If the motor rotates in the positive direction and the absolute position data reaches +2,147,483,647 PUU, the value jumps to -2,147,483,648 in the next turn, and keeps increasing from -2,147,483,648 to +2,147,483,647.

If the motor rotates in the negative direction and the absolute position data reaches -2,147,483,648 PUU, the value jumps to +2,147,483,647 in the next turn, and keeps increasing from +2,147,483,647 to -2,147,483,648.

See the following examples:

Example 1: when P1.044 = 16,777,216 and P1.045 = 100,000, the motor needs 100,000 PUU to run one revolution. 2,147,483,647 ÷ 100,000 ≒ 21,474.8, so once the motor runs over 21,474.8 (< 32,767) revolutions in the positive direction, AL289 occurs.

Example 2: when P1.044 = 16,777,216 and P1.045 = 10,000, the motor needs 10,000 PUU to run one revolution. 2,147,483,647 ÷ 10,000 ≒ 214,748.3, so once the motor runs over 32,767 (< 214,748.3) revolutions in the positive direction, AL062 occurs.

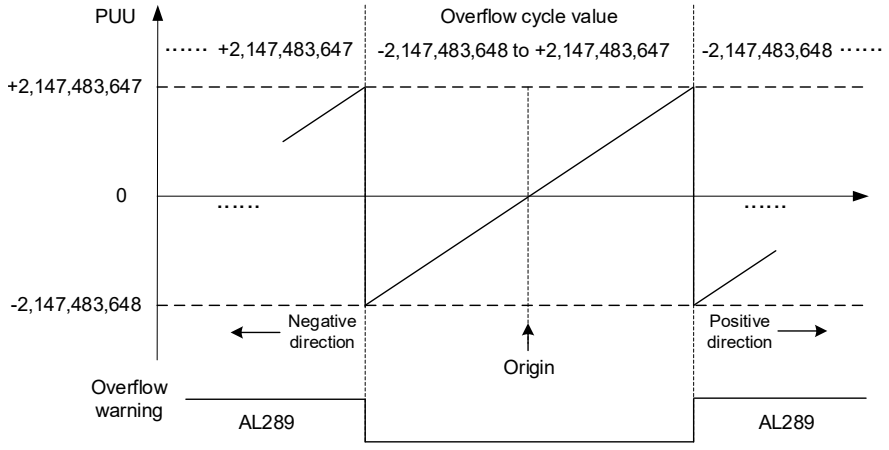

Figure 10.3.3.1 Absolute position in PUU

Note: after the absolute origin position is established, any modification to P1.001.Z or the E-Gear ratio (P1.044 and P1.045) changes the original setting of the absolute origin position. If any of these parameters are modified, re-establish the absolute origin position.

10.3.4 Establishing the absolute origin position

When the absolute position is lost, the servo drive provides several methods to establish the absolute origin position. The following details each method.

10

10.3.4.1 Establishing the absolute origin position with DI/DO

When the servo system is controlled by the controller, you can establish the absolute origin position with DI/DO. Once the absolute position is established, the pulse number is reset to 0 and the PUU number is reset to the setting value of P6.001. Refer to the following descriptions.

Timing sequence:

1. When the controller triggers DI.ABSE, it has to wait for the T_S delay time before proceeding to the next step.
2. After reaching T_S, the controller starts to establish the absolute origin position. When DI.ABSC is triggered and remains On for the T_Q delay time, the pulse number is reset to 0 and the PUU number is reset to the setting value of P6.001.

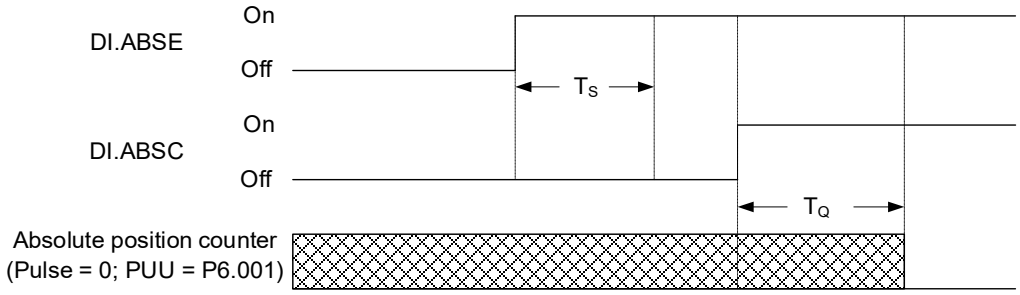

Figure 10.3.4.1.1 Timing diagram for establishing the absolute origin position with DI/DO

The following table describes the T_S and T_Q delay times after DI.ABSE and DI.ABSC are switched to On.

	T_S (ms)	T_Q (ms)
Min.	P2.009 + 2	
Max.	P2.009 + 10	

10.3.4.2 Establishing the absolute origin position with parameters

Set P2.071 to 0x0001 through the panel or communication to establish the absolute origin position. Since P2.071 is write-protected by P2.008, you must set P2.008 to 271 first, and then set P2.071 to 0x0001. Then, the absolute position system resets immediately.

10.3.4.3 Establishing the absolute origin position with the PR homing function

You can use the homing methods in PR mode to establish the absolute origin position. For details, refer to Section 7.1.3.1.

10.3.5 Reading the absolute position

10.3.5.1 Reading the absolute position with DI/DO

Set P2.070 [Bit 0] to 0 so that you can read the PUU number with DI/DO. See the following descriptions.

Bit 79 - Bit 64	Bit 63 - Bit 32		Bit 31 - Bit 16	Bit 15 - Bit 0
-	WORD_3	WORD_2	WORD_1	WORD_0
Check Sum	Encoder PUU number -2,147,483,648 to +2,147,483,647		0	Encoder status (P0.050)

Set P2.070 [Bit 0] to 1 so that you can read the pulse number with DI/DO. See the following descriptions.

Bit 79 - Bit 64	Bit 63 - Bit 32		Bit 31 - Bit 16	Bit 15 - Bit 0
-	WORD_3	WORD_2	WORD_1	WORD_0
Check Sum	Encoder pulse number within a single turn 0 to 16,777,215 (= 16,777,216 - 1)		Number of encoder revolution -32,768 to +32,767	Encoder status (P0.050)

Example: reading the pulse number with DI/DO

Check Sum = (((((((WORD_0 + 0xA700) XOR WORD_1) + 0x605A) XOR WORD_2) + 0x30A5) XOR WORD_3) + 0x5A06)

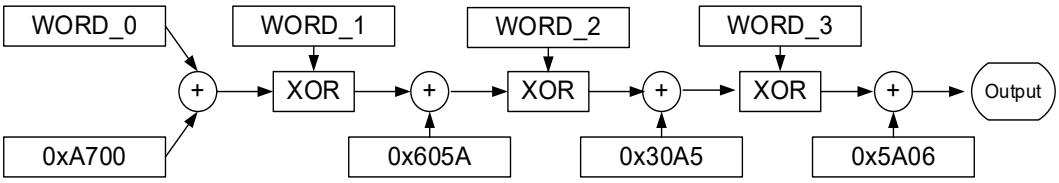

Note:
1. This algorithm has no positive or negative sign.
2. 0xA700, 0x605A, 0x30A5, and 0x5A06 are constants in hexadecimal format.

10

You can set P2.070 [Bit 0] to read the position value in units of pulse or PUU with DI/DO.

See the following timing diagram.

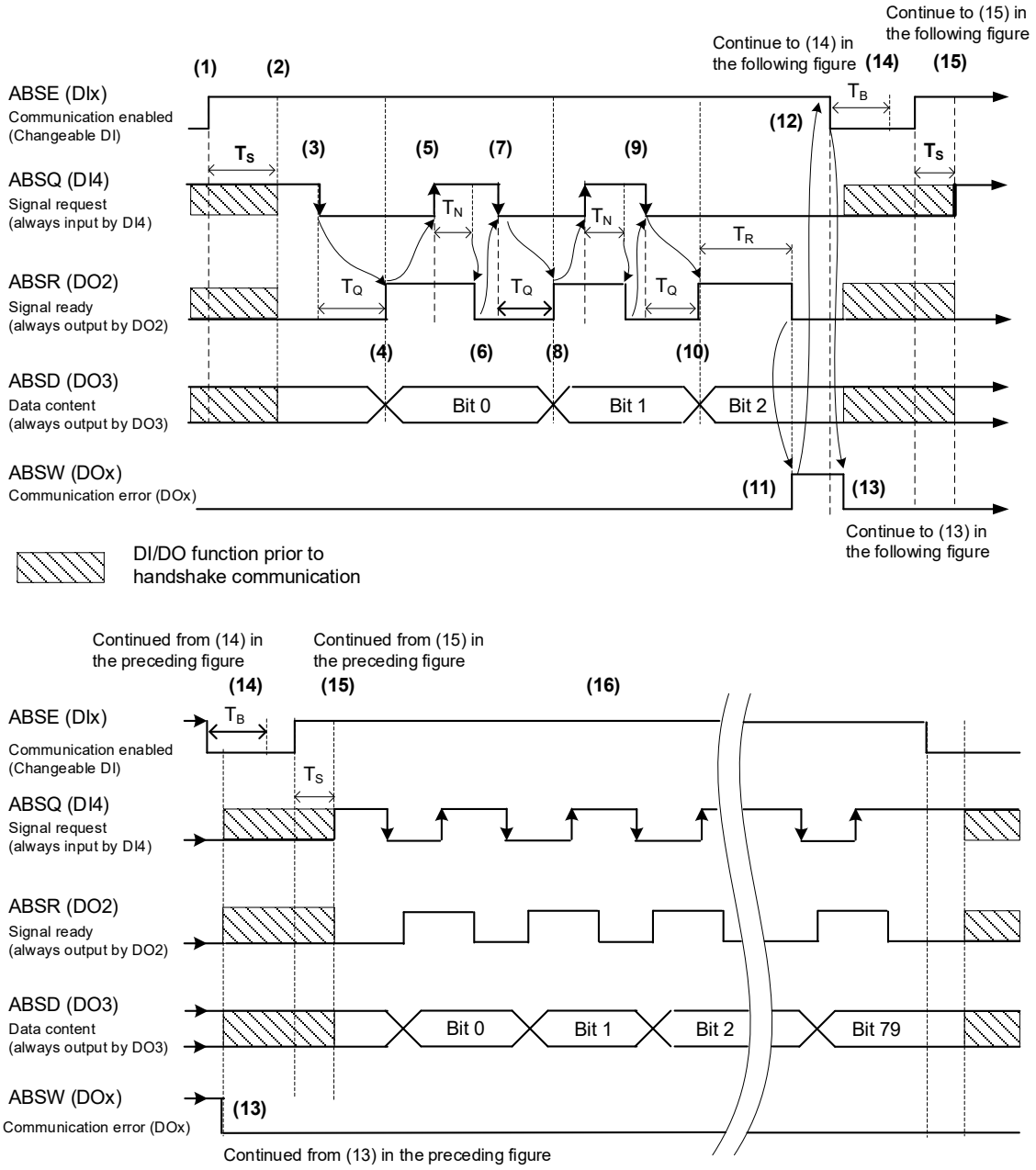

Figure 10.3.5.1.1 Timing diagram for reading the absolute position with DI/DO

The following table describes the delay times when you read the absolute position with DI/DO.

	T_R (ms)	T_S (ms)	T_Q (ms)	T_N (ms)	T_B (ms)
Min.	-	P2.009 + 2			
Max.	200	P2.009 + 10			

Descriptions:

(1) When the handshake communication starts, the ABSE signal is triggered.

(2) After the T_S delay time (to make sure the ABSE signal is On), the functions of DI4, DO2, and DO3 are switched to ABSQ, ABSR, and ABSD respectively. If DI4 was in the high-level state, it remains in the same state (as a logic high-level signal) after switching to ABSQ. When DI.ABSE is On, the function of DI4 is changed to DI.ABSQ, the function of DO2 is changed to DO.ABSR, and the function of DO3 is changed to DO.ABSD (the original functions of DI4, DO2, and DO3 automatically change according to the DI.ABSE state). Pay special attention when switching their functions before, during, and after the signal handshake. To set these three DI/DOs as single function, set them to 0 before switching the functions.

(3) If DI4 was in the high-level state and its function was switched to ABSQ after the T_S delay time, when the controller resets this signal to low level, the new signal is interpreted as the request for data access.

(4) After the T_Q delay time, the handshake data is ready and sent to ABSD. Now the servo drive triggers the ABSR signal and the controller can access the data. If the controller cannot detect that the ABSR state has changed from low to high level after the maximum T_Q time, there may be a communication error such as a communication cable disconnection.

(5) Once detecting the ABSR signal state as high level, the controller accesses the data, and sets the ABSQ signal to high level to notify the servo drive that the data was read.

(6) When ABSQ is in the high-level state for the T_N time, ABSR is set to low level to send the data for the next bit communication.

(7) When detecting the ABSR signal state as low level, the controller sets ABSQ to low level and sends a request to the servo drive for the next bit communication.

(8) Repeat steps 3 and 4. Send the absolute position to ABSD for the next bit communication.

(9) Repeat steps 5 to 7. The controller reads the data and notifies the servo drive that it has received the data.

(10) The third bit data is ready.

(11) After the T_R waiting time, if the controller has neither read the data nor triggered the ABSQ signal, the servo drive sends the ABSW signal (communication error) and stops the handshake communication.

(12) When the controller receives the ABSW signal, it sets ABSE to low level and prepares to restart the handshake communication.

(13) ABSW resumes to low level after the controller sets the ABSE signal to low level.

(14) The controller restarts the communication after the T_B time.

(15) Repeat step 1.

(16) If no error occurs, the controller completes 80 bits (Bit 0 - 79) of the handshake communication with the servo drive. DI4, DO2, and DO3 then restore to their original functions.

Note: if ABSE is set to low level first and then changed to high level, but ABSW does not return to low level and the communication remains in the error state, it means some other errors have also occurred, such as AL060 (Absolute position is lost), AL061 (Encoder undervoltage), or AL062 (Number of revolutions of the absolute encoder overflows). The handshake communication can only be restarted after the errors have been cleared.

10.3.5.2 Reading the absolute position through communication

You can access the data of the absolute encoder through the following communication methods.

10

Instant access

The servo drive reads the motor's position feedback once the power is supplied. Setting P0.017 (Specifying content of status monitoring register 1) to 0 means to access the motor's position feedback through P0.009 (Status monitoring register 1).

Register access

The motor's position is stored in the drive's register and the read value does not change with the motor's movement. Once you set P0.049.X through communication, the encoder absolute position is stored in P0.051 and P0.052, which data unit can be set with P2.070 [Bit 1].

- When P0.049.X = 1, the drive does not clear the position error while reading the position value. After finishing reading P0.051 and P0.052, set P0.049.X to 1 again to read the value.
- When P0.049.X = 2, the drive clears the position error while reading the position value. After the motor is enabled, it moves slightly forward and backward to correct its position even when it is to remain stopped.
  To avoid the difference between the actual and read positions, set P0.049.X to 2 to update the motor's actual position to the drive, which clears the position error.
  For example, the motor's current position is 20000, but the actual position is between 19999 and 20001 under normal circumstances. If you issue a command to read the position when the motor is at 20001, the read value is 20001 and updated to the drive as the motor position, which clears the position error. If the read position is not updated, it may be different from the motor's current position, which causes a command error.
- When the position data is updated to P0.051 and P0.052, P0.049.X automatically resets to 0, meaning the controller can access the values of P0.051 and P0.052.
- P0.050 shows the status of the absolute encoder. When "absolute position lost" or "absolute number of revolutions overflows" is shown, the read absolute position is invalid. In this case, you must re-establish the absolute origin position.

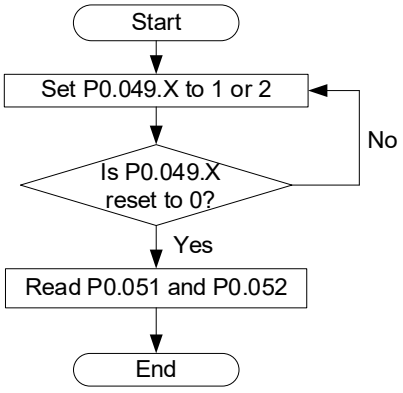

11 Troubleshooting

This chapter provides alarm descriptions and the corrective actions you can take for troubleshooting.

11.1 Alarm list ····· 11-2
General type ····· 11-2
Motion control type ····· 11-4
11.2 Causes and corrective actions ····· 11-5

The alarms are categorized into the following types:

General type: alarms caused by hardware or encoder signal errors.

Motion control type: alarms caused by motion control command (in PR mode) errors.

11

“AL.nnn” is the alarm format on the 7-segment display, as shown in the following figure.



If the recommended alarm clearing method is DI.ARST, set DI.ARST (alarm reset) to On or P0.001 to 0x0000 for clearing the alarm.

11.1 Alarm list

General type

Display	Alarm name	Error type		Servo state	
		ALM	WARN	ON	OFF
AL001	Overcurrent	○			○
AL002	Overvoltage	○			○
AL003	Undervoltage		○		○
AL004	Motor combination error	○			○
AL005	Regeneration error	○			○
AL006	Overload	○			○
AL007	Excessive control error of Speed command	○			○
AL008	Abnormal pulse command	○			○
AL009	Excessive control error of Position command	○			○
AL010	Voltage error during regeneration	○			○
AL011	CN2 communication failed	○			○
AL013	Emergency stop		○		○
AL014	Negative limit error		○	○	
AL015	Positive limit error		○	○	
AL016	Abnormal IGBT temperature	○			○
AL017	EEPROM error	○			○
AL018	OA and OB output error	○			○
AL020	Serial communication timeout		○	○	
AL022	Main power error		○		○
AL023	Early overload warning		○	○	
AL024	Encoder initial magnetic field error	○			○
AL025	Encoder internal error	○			○
AL026	Encoder unreliable internal data	○			○
AL027	Encoder internal reset error	○			○
AL028	Battery voltage error or encoder internal error	○			○
AL029	Gray code error	○			○

Display	Alarm name	Error type		Servo state	
		ALM	WARN	ON	OFF
AL02B	Motor data error	○			○
AL02C	Servo drive overload	○			○
AL02F	Blocked rotor protection	○			○
AL030	Motor collision error	○			○
AL031	Motor power cable wiring error	○			○
AL032	Abnormal encoder vibration	○			○
AL033	Motor is in error	○			○
AL034	Encoder internal communication error	○			○
AL035	Encoder temperature exceeds the protective limit	○			○
AL036	Encoder alarm status error	○			○
AL042	Voltage input for analog Speed command is too high	○			○
AL044	Servo function operational warning		○	○	
AL045	E-Gear ratio value error	○			○
AL060	Absolute position is lost		○	○	
AL061	Encoder undervoltage		○	○	
AL062	Number of revolutions of the absolute encoder overflows (issued by encoder)		○	○	
AL064	Encoder vibration warning		○	○	
AL067	Encoder temperature warning		○	○	
AL069	Wrong motor type	○			○
AL06A	Absolute position is lost		○	○	
AL070	Encoder did not complete the read / write procedure		○	○	
AL083	Servo drive outputs excessive current	○			○
AL085	Regeneration setting error	○			○
AL086	Regenerative resistor overload	○			○
AL095	Regenerative resistor is disconnected or regenerative circuit is in error	○			○
AL099	DSP firmware error	○			○
AL35F	Emergency stop during deceleration		○	○	
AL3CF	Emergency stop		○		○
ALC31	Motor power cable disconnection	○			○

Note: if the servo drive shows an alarm that is not in this table, contact the local distributor or technician.

Motion control type

Display	Alarm name	Error type		Servo state	
		ALM	WARN	ON	OFF
AL207	Parameter group of the data source for Type [8] PR is out of range		○	○	
AL209	Parameter number of the data source for Type [8] PR is out of range		○	○	
AL211	Parameter format setting of Type [8] PR is in error		○	○	
AL213	Parameter setting of Type [8] PR is in error		○	○	
AL215	Parameter written with Type [8] PR is read-only		○	○	
AL217	Parameter written with Type [8] PR is write-protected when Servo On		○	○	
AL219	Parameter written with Type [8] PR is write-protected		○	○	
AL231	Monitoring variable code specified with Type [8] PR is out of range		○	○	
AL235	Position counter overflow warning		○	○	
AL237	Rotary axis position is undefined		○	○	
AL245	PR positioning timeout	○			○
AL249	PR path is out of range	○			○
AL283	Software positive limit		○	○	
AL285	Software negative limit		○	○	
AL289	Position counter overflows		○	○	
AL380	Position offset alarm for DO.MC_OK		○	○	
AL400	Rotary axis position setting error	○			○
AL404	PR special filter setting value is too great	○			○
AL555	System failure	○			○
AL809	PR motion setting error or command decoding error	○			○

Note: if the servo drive shows an alarm that is not in this table, contact the local distributor or technician.

11.2 Causes and corrective actions

AL001 Overcurrent	
Trigger condition and cause	Condition: the main circuit current is greater than 1.5 times the maximum instantaneous current of the servo drive. Cause: 1. The servo drive output is short-circuited. 2. The motor wiring is in error. 3. IGBT error.
Checking method and corrective action	1. Check the connection between the motor and servo drive and make sure that the wire is not short-circuited. Do not expose the metal conductor. Check that you have followed the wiring sequence described in this manual for connecting the motor to the servo drive. 2. If the temperature of the heat sink is abnormal, send your servo drive back to the distributor or contact Delta. Check if the set value of the parameter is much greater than the factory default setting. It is recommended that you reset the parameter to the factory default and then modify the setting gradually.
How to clear the alarm?	Cycle power on the servo drive.

AL002 Overvoltage	
Trigger condition and cause	Condition: the main circuit voltage exceeds the rated value. Cause: 1. The input voltage to the main circuit is higher than the allowable rated value. 2. Incorrect power input (incorrect power system). 3. Malfunction of the servo drive hardware. 4. Incorrect selection of or no connection to an external regenerative resistor.
Checking method and corrective action	1. Use a voltmeter to check if the input voltage to the main circuit is within the allowable rated value (refer to Appendix A Specifications) and if the power system complies with the specifications. Use the correct power supply or install a transformer or regulator to keep the voltage within the range. 2. If the alarm still occurs when the specifications are met, send your servo drive back to the distributor or contact Delta. 3. Check the connection for the regenerative resistor and re-calculate the resistance value. Correctly set the values of P1.052 and P1.053.
How to clear the alarm?	DI.ARST

11

AL003 Undervoltage	
Trigger condition and cause	Condition: 1. The main circuit voltage is below the rated value. The error type of AL003 is a warning (WARN) by default. To set AL003 as an alarm (ALM), you can set P2.066 [Bit 9] to 1. 2. The DC Bus voltage is below P4.024 × $\sqrt{2}$. Cause: 1. The input voltage to the main circuit is lower than the allowable rated value. 2. No voltage input to the main circuit. 3. Incorrect power input (incorrect power system).
Checking method and corrective action	1. Check if the wiring of the power supply is correct and the input voltage to the main circuit is normal. 2. Check the switch of the power supply and use a voltmeter to check the main circuit voltage. 3. Use a voltmeter to check if the power system complies with the specifications. If not, use the correct power supply or install a transformer.
How to clear the alarm?	Clear AL003 according to the setting of P2.066 [Bit 2]: 1. If P2.066 [Bit 2] = 0, set DI.ARST = On to clear the alarm after the voltage is back in the normal range. 2. If P2.066 [Bit 2] = 1, the alarm is automatically cleared after the voltage is back in the normal range.

AL004 Motor combination error	
Trigger condition and cause	Condition: an incorrect motor is used with the servo drive. Cause: 1. Motor combination error (the wrong motor is connected to the servo drive). 2. The encoder connector is loose. 3. The encoder is damaged.
Checking method and corrective action	1. Use the right motor. 2. Check and re-install the encoder connector. 3. If the encoder is not operating properly, replace the motor.
How to clear the alarm?	Cycle power on the servo drive.

AL005 Regeneration error	
Trigger condition and cause	Condition: an error occurs during regeneration. Cause: 1. Incorrect selection of or no connection to an external regenerative resistor. 2. P1.053 (Regenerative resistor capacity) is not set to 0 when a regenerative resistor is not connected. 3. Incorrect parameter settings for P1.052 and P1.053.
Checking method and corrective action	1. Check the connection for the regenerative resistor and re-calculate the resistance value. Correctly set the values of P1.052 and P1.053. If the issue persists, send your servo drive back to Delta. 2. Set P1.053 to 0 if not using a regenerative resistor. 3. Correctly set P1.052 (Regenerative resistor value) and P1.053 (Regenerative resistor capacity).
How to clear the alarm?	After the alarm occurs, wait until the time set in P2.123 has elapsed and then reset the alarm.

AL006 Overload	
Trigger condition and cause	Condition: overload of motor and servo drive. Cause: 1. The load is over the rated range and the servo drive is in a continuous overload condition. 2. Improper settings for the parameters of the control system. 3. The motor wiring is in error. 4. The encoder is in error.
Checking method and corrective action	1. Set P0.002 = 12 to monitor if the average load rate [%] is continuously over 100%. If so, increase the motor capacity or reduce the load. Refer to Appendix A for Graph of load ratio and operating time. 2. Check if there is any mechanical vibration or the setting for acceleration or deceleration is too drastic. 3. Check if the wiring of the motor power cable and the encoder cable is correct. 4. Send your servo motor back to the distributor or contact Delta.
How to clear the alarm?	After the alarm occurs, wait until the time set in P2.123 has elapsed and then reset the alarm.

AL007 Excessive control error of Speed command	
Trigger condition and cause	Condition: difference between the Speed command and the speed feedback exceeds the allowable range set by P2.034. Cause: 1. A drastic change in the Speed command input. 2. Improper setting of P2.034 (Excessive error warning condition of Speed command). 3. Incorrect wiring of the motor power cable and the encoder cable.
Checking method and corrective action	1. Use the signal detector to check if the input analog voltage signal is normal. If not, adjust the change rate of input signals or enable the filter function. 2. Check if the value of P2.034 is set properly. 3. Check if the wiring of the motor power cable and the encoder cable is correct.
How to clear the alarm?	DI.ARST

AL008 Abnormal pulse command	
Trigger condition and cause	Condition: the input frequency of the pulse command is over the allowable value for the hardware interface. Cause: the pulse command frequency is higher than the rated input frequency.
Checking method and corrective action	Use the scope to check if the input frequency is higher than the rated input frequency and correctly set the input pulse frequency.
How to clear the alarm?	DI.ARST

AL009 Excessive control error of Position command	
Trigger condition and cause	Condition: difference between the Position command and the position feedback exceeds the allowable range set by P2.035. Cause: 1. P2.035 (Excessive error warning condition of Position command) is set too low. 2. The gain value is set too low. 3. The torque limit or speed limit is set too low. 4. Excessive external load. 5. Improper setting for the E-Gear ratio. 6. The power cable is loose. 7. The maximum speed limit is set too low.
Checking method and corrective action	1. If the set value of P2.035 is too low, set a higher value. 2. Check if the gain value is appropriate for the application. 3. When the speed and torque limit functions are not needed, disable P1.002; otherwise, check if the internal speed limit (P1.009 - P1.011) and internal torque limit (P1.012 - P1.014) are set correctly. 4. Check the external load. Reduce the external load or re-evaluate the motor capacity if necessary. 5. Check if the settings of P1.044 and P1.045 are appropriate for the application. If not, set them to proper values. 6. Check if the power cable is loose. 7. Check if the set value of P1.055 (Maximum speed limit) is too low.
How to clear the alarm?	DI.ARST

AL010 Voltage error during regeneration	
Trigger condition and cause	Condition: an error occurs during regeneration. Cause: 1. The regenerative voltage remains at 400V for a period of time during regeneration. This may be caused by the incorrect selection of or no connection to an external regenerative resistor. 2. P1.053 (Regenerative resistor capacity) is not set to 0 when a regenerative resistor is not connected.
Checking method and corrective action	1. Check the connection for the regenerative resistor and re-calculate the resistance value. Correctly set the values of P1.052 and P1.053. If the issue persists, send your servo drive back to Delta. 2. Set P1.053 to 0 if not using a regenerative resistor.
How to clear the alarm?	DI.ARST

AL011 CN2 communication failed	
Trigger condition and cause	Condition: the encoder communication is in error. Cause: 1. The CN2 wiring is incorrect. 2. The CN2 connector is loose. 3. The CN2 wiring is poor. 4. The encoder communication is disconnected due to interference. 5. The encoder is damaged. 6. A motor not supported by this servo drive is used.
Checking method and corrective action	1. Check if the wiring follows the instructions in the user manual. If not, connect the wire correctly. 2. Check the connection between the CN2 port of the servo drive and the CN2 connector. Reconnect them if the connection is loose. 3. Check for the encoder cable and connector that connect the motor and CN2 port of the servo drive to see if there is any poor wiring or damaged wires. If so, replace the connector and cable. 4. Set P0.002 = -80 to monitor the encoder communication error rate. If this value increases continuously, it means there is interference. Check the following items: (a) Check if the motor is properly grounded. Make sure the ground end (yellow / green) of the power cable is connected to the servo drive heat sink. (b) Check if the connection for the encoder cable is normal. Make sure the encoder cable is separated from the power cable or any high-current cables to avoid interference. (c) Use a shielded encoder cable and correctly ground the shield. 5. If you took all the corrective actions but the issue persists, replace the motor. 6. Contact the distributor for the supported motor models or the communication specifications of the encoder.
How to clear the alarm?	Cycle power on the servo drive.

AL013 Emergency stop	
Trigger condition and cause	The emergency stop button is pressed.
Checking method and corrective action	Make sure the emergency stop button is Off.
How to clear the alarm?	Set DI.EMGS to Off.

11

AL014 Negative limit error	
Trigger condition and cause	Condition: the negative limit switch is triggered. Cause: 1. The negative limit switch is triggered. 2. The servo system is unstable.
Checking method and corrective action	1. Make sure the negative limit switch is Off. 2. Check the parameter setting or re-estimate the motor capacity.
How to clear the alarm?	The alarm is automatically cleared after the motor moves away from the limit.

AL015 Positive limit error	
Trigger condition and cause	Condition: the positive limit switch is triggered. Cause: 1. The positive limit switch is triggered. 2. The servo system is unstable.
Checking method and corrective action	1. Make sure the positive limit switch is Off. 2. Check the parameter setting or re-estimate the motor capacity.
How to clear the alarm?	The alarm is automatically cleared after the motor moves away from the limit.

AL016 Abnormal IGBT temperature	
Trigger condition and cause	Condition: the temperature of IGBT is abnormal. Cause: 1. The load is over the rated range and the servo drive is in a continuous overload condition. 2. The servo drive output is short-circuited.
Checking method and corrective action	1. Check for servo drive overload or motor overcurrent. If so, try increasing the motor capacity or reducing the load. 2. Check if the wiring of servo drive output is correct.
How to clear the alarm?	After the alarm occurs, wait until the time set in P2.123 has elapsed and then reset the alarm.

AL017 EEPROM error	
Trigger condition and cause	Condition: an error occurs when DSP accesses EEPROM. Cause: 1. Parameter writing error or the value exceeds the allowable range. 2. When power is supplied to the servo drive, the data in ROM is damaged or there is no data in ROM.
Checking method and corrective action	Press the SHIFT key and the panel displays the parameter code “EXGAB”. X = 1, 2, 3 G = Group number of the parameter AB = Parameter number in hexadecimal format If the panel displays “E320A”, it indicates parameter P2.010. If the panel displays “E3610”, it indicates parameter P6.016. Check the value for the corresponding parameter. 1. The panel displays the parameter code. If this alarm occurs when power is supplied to the drive, it means the parameter value has exceeded the range. Modify the value and then cycle power on the servo drive. If the alarm occurs during normal operation, it means an error occurred when the parameter is written. Set DI.ARST = On to clear this alarm. 2. The panel displays “E100X” or “E0001”. If this alarm occurs when power is supplied to the drive, it is usually because the data in ROM is damaged or there is no data in ROM. Send your servo drive back to the distributor or contact Delta.
How to clear the alarm?	If this alarm occurs once the power is supplied, reset the parameter and then cycle power on the servo drive. If the alarm occurs during operation, set DI.ARST to On.

11

AL018 OA and OB output error	
Trigger condition and cause	Condition: the output frequency of the OA and OB pulses is higher than the maximum output frequency of the hardware. Cause: 1. The resolution of the OA and OB pulses is set too high. 2. There is interference or damage to the encoder cable, causing communication error. 3. Encoder error.
Checking method and corrective action	1. Check if P1.076 and P1.046 are correctly set. 2. Set P0.002 = -80 to monitor the encoder communication error rate. If this value increases continuously, it means there is interference. Check the following items: (a) Check if the motor is properly grounded. Make sure the ground end (yellow / green) of the power cable is connected to the servo drive heat sink. (b) Check if the connection for the encoder cable is normal. Make sure the encoder cable is separated from the power cable or any high-current cables to avoid interference. (c) Use a shielded encoder cable and correctly ground the shield. 3. Check the fault record (P4.000 - P4.004) and see if any encoder alarm (AL011, AL024, AL025, or AL026) has occurred. Use the checking methods and corrective actions to clear the alarm if any of them occurs. 4. If you do not need to use the OA and OB pulses, set P2.065 [Bit 13] to 1 to disable the detection for OA and OB output error (AL018).
How to clear the alarm?	1. DI.ARST 2. Contact the distributor.

AL020 Serial communication timeout	
Trigger condition and cause	Condition: RS-485 or RS-232 communication error. Cause: 1. Improper setting for P3.004 (Modbus communication timeout). 2. The servo drive has not received the communication command for a long time (refer to P3.004).
Checking method and corrective action	1. Check and correctly set the value for the communication timeout parameter. 2. Check if the communication cable is loose or disconnected and make sure it is correctly wired.
How to clear the alarm?	DI.ARST

AL022 Main power error	
Trigger condition and cause	Condition: main power cable is loose or there is no input power. The error type of AL022 is a warning (WARN) by default. To set AL022 as an alarm (ALM), you can set P2.066 [Bit 12] to 1. Cause: main power error.
Checking method and corrective action	Check if the main power cable is loose or if there is no input power. AL022 occurs when one single phase is not connected to the power supply. Correctly connect the power to the servo drive. If the issue persists, send your servo drive back to the distributor or contact Delta.
How to clear the alarm?	DI.ARST

AL023 Early overload warning	
Trigger condition and cause	Early overload warning.
Checking method and corrective action	1. Check if the motor is overloaded and refer to the checking method and corrective action of AL006. 2. Check if the value of P1.056 (Motor output overload warning level) is set too low. If so, set the value higher, or disable the warning function by setting the value greater than 100.
How to clear the alarm?	DI.ARST

AL024 Encoder initial magnetic field error	
Trigger condition and cause	Condition: the magnetic field of the encoder U, V, W signal is in error. Cause: the initial magnetic field of the encoder is in error (magnetic field of the encoder U, V, W signal is in error).
Checking method and corrective action	1. Check if the motor is properly grounded. Make sure the ground end (yellow / green) of the power cable is connected to the servo drive heat sink. 2. Check if the connection for the encoder cable is normal. Make sure the encoder cable is separated from the power cable or any high-current cables to avoid interference. 3. Use a shielded encoder cable and correctly ground the shield. If the issue persists, send your servo motor back to the distributor or contact Delta.
How to clear the alarm?	Cycle power on the servo drive.

AL025 Encoder internal error	
Trigger condition and cause	Condition: the internal memory and counter of the encoder are in error. Cause: 1. Encoder internal error (internal memory and counter are in error). 2. When power is applied, the motor rotates because of mechanical inertia or other causes.
Checking method and corrective action	1. Check if the motor is properly grounded. Make sure the ground end (yellow / green) of the power cable is connected to the servo drive heat sink. 2. Check if the connection for the encoder cable is normal. Make sure the encoder cable is separated from the power cable or any high-current cables to avoid interference. 3. Use a shielded encoder cable and correctly ground the shield. 4. Make sure the motor shaft does not move when power is turned on.
How to clear the alarm?	Cycle power on the servo drive.

AL026 Encoder unreliable internal data	
Trigger condition and cause	Condition: internal data error occurs three consecutive times. Cause: 1. External interference. 2. Malfunction of the encoder hardware.
Checking method and corrective action	If there is interference, check the following items: 1. Check if the motor is properly grounded. Make sure the ground end (yellow / green) of the power cable is connected to the servo drive heat sink. 2. Check if the connection for the encoder cable is normal. Make sure the encoder cable is separated from the power cable or any high-current cables to avoid interference. 3. Use a shielded cable encoder cable and correctly ground the shield. 4. Set P0.002 = -80 to monitor the communication error rate. If the value is greater than 0 and increases continuously, check the previous three items again. If the value is 0, send your servo motor back to the distributor or contact Delta.
How to clear the alarm?	Cycle power on the servo drive.

AL027 Encoder internal reset error	
Trigger condition and cause	Condition: encoder reset error. Cause: encoder reset.
Checking method and corrective action	1. Check if there is poor contact for the encoder cable. 2. Check if the power to the encoder is stable and make sure to use a shielded encoder cable. 3. Check if the operating temperature is over 95°C (203°F). Fix the cause of the high temperature and do not restart the operation before the temperature falls within the allowable range. If the issue persists, send your servo motor back to the distributor or contact Delta.
How to clear the alarm?	Cycle power on the servo drive.

AL028 Battery voltage error or encoder internal error	
Trigger condition and cause	Condition: the battery voltage is higher than the specification (> 3.8V) or the encoder signal is in error. Cause: 1. The voltage level of the battery is too high. 2. Encoder internal error.
Checking method and corrective action	1. Check if there is a charging circuit. Avoid incorrect wiring. If the Pin 1 (+5V) of CN2 is connected to BAT+ of the encoder connector, it means the 5V power of the servo drive is being charged to the battery. 2. Check if the battery is correctly installed (voltage > 3.8V). 3. Check if the motor is properly grounded. Make sure the ground end (yellow / green) of the power cable is connected to the servo drive heat sink. 4. Check if the connection for the encoder cable is normal. Make sure the encoder cable is separated from the power cable or any high-current cables to avoid interference. 5. Use a shielded encoder cable and correctly ground the shield. If the issue persists, send your servo drive and motor back to the distributor or contact Delta.
How to clear the alarm?	Cycle power on the servo drive.

AL029 Gray code error	
Trigger condition and cause	Absolute position within a single revolution is in error.
Checking method and corrective action	Cycle power on the servo drive to operate the motor. Then, check if the alarm occurs again. If the issue persists, replace the encoder.
How to clear the alarm?	Cycle power on the servo drive.

AL02B Motor data error	
Trigger condition and cause	Internal data access to the motor is in error.
Checking method and corrective action	Send your servo motor back to the distributor or contact Delta.
How to clear the alarm?	N/A

AL02C Servo drive overload	
Trigger condition and cause	Condition: the servo drive is overloaded. Cause: 1. The load is over the rated range and the servo drive is in a continuous overload condition. 2. Improper settings for the gain parameters or the motion profile of the control system. 3. Motor wiring error. 4. The encoder is damaged or malfunctioning.
Checking method and corrective action	1. Set P0.002 = 55 to monitor the current feedback. Check if the motor current exceeds the rated output current of the servo drive for a long period of time. 2. (a) Check if there is any mechanical vibration. If so, properly adjust the gain parameters. (b) Set a higher acceleration / deceleration time constant or a lower target speed. 3. Check if the wiring of the motor power cable and encoder cable is correct. 4. Replace the encoder.
How to clear the alarm?	After the alarm occurs, wait until the time set in P2.123 has elapsed and then reset the alarm.

AL02F Blocked rotor protection	
Trigger condition and cause	Condition: the servo drive is overloaded, and the motor speed is maintained at 10 rpm and below or the rotor is blocked. Cause: 1. The motor or the connected mechanical part is jammed, preventing the motor from rotating. 2. The motor is running at an extremely low speed or the rotor is blocked for a long time.
Checking method and corrective action	1. Set the motor speed higher to shorten the blocked rotor time. 2. Check if the mechanical part connected to the motor is working normally. 3. Check if the wiring of the motor power cable and the encoder cable is correct. 4. Send your servo motor back to the distributor or contact Delta.
How to clear the alarm?	After the alarm occurs, wait until the time set in P2.123 has elapsed and then reset the alarm.

AL030 Motor collision error	
Trigger condition and cause	Condition: the motor hits the device, reaching the torque value set by P1.057 for the duration of the time set by P1.058. Cause: 1. Check if P1.057 (Motor hard stop) is enabled by mistake. If so, set P1.057 to 0. 2. Check if the value set by P1.057 is too low and the time set by P1.058 is too short. Set P1.057 according to the actual torque. If P1.057 is set too low, it may lead to malfunction; if P1.057 is set too high, it may lose the protection function.
Checking method and corrective action	Cycle power on the servo drive to operate the motor. Then, check if the alarm occurs again. If the issue persists, replace the encoder.
How to clear the alarm?	DI.ARST

AL031 Motor power cable wiring error	
Trigger condition and cause	Condition: incorrect wiring of the motor power cable (U, V, W) and ground (GND). Cause: incorrect wiring of the motor power cable (U, V, W) and ground (GND). The detection for motor power cable wiring error is set by P2.065 [Bit 8], which is enabled by default.
Checking method and corrective action	Check if the wiring of the motor power cable (U, V, W) and ground (GND) is correct. Follow the instructions in this user manual for correct wiring and proper grounding.
How to clear the alarm?	Cycle power on the servo drive.

AL032 Abnormal encoder vibration	
Trigger condition and cause	Condition: abnormal vibration occurred in the encoder. Cause: the internal signal or mechanical part of the encoder is abnormal, so the encoder returns an error signal.
Checking method and corrective action	Check if the motor vibration range exceeds the specification of 2.5 G. If the vibration is within the specification but the alarm still occurs, send your servo motor back to the distributor or contact Delta.
How to clear the alarm?	DI.ARST or cycle power on the servo drive.

AL033 Motor is in error	
Trigger condition and cause	The motor is in error.
Checking method and corrective action	1. Check if the 5V power to the encoder is lower than 4.3V. 2. Check if the cable complies with the specifications. Do not use a cable that is too long or unshielded. 3. Check if the connection for the encoder cable is normal. Make sure the encoder cable is separated from the power cable or any high-current cables to avoid interference.
How to clear the alarm?	If the issue persists, send your servo motor back to the distributor or contact Delta.

AL034 Encoder internal communication error	
Trigger condition and cause	Condition: 1. Internal communication error for the absolute encoder. 2. Internal error for other types of encoders. Cause: encoder internal communication error.
Checking method and corrective action	1. Check if the battery wiring is incorrect or loose. If it is loose, wire it again and cycle power on the system. 2. Check if the battery voltage is within the normal range. 3. Internal communication error for the absolute encoder occurs. Replace the motor.
How to clear the alarm?	Cycle power on the servo drive.

AL035 Encoder temperature exceeds the protective limit	
Trigger condition and cause	Condition: the encoder temperature is over the upper limit of 100°C (212°F). Cause: the encoder temperature is over 100°C.
Checking method and corrective action	Set P0.002 = -124 to read the temperature and check if it is below 100°C. If the encoder temperature is higher than 100°C, improve the heat dissipation to lower the temperature. If the temperature difference between the encoder and motor is over 30°C (54°F), send your servo motor back to Delta.
How to clear the alarm?	After the temperature becomes lower than 100°C, cycle power on the servo drive.

AL036 Encoder alarm status error	
Trigger condition and cause	Condition: abnormal state occurred in the encoder. Cause: the encoder sends out an alarm signal, but the alarm status of the encoder read by the servo drive shows no error.
Checking method and corrective action	1. Check if the motor is properly grounded. Make sure the ground end (yellow / green) of the power cable is connected to the servo drive heat sink. 2. Check if the connection for the encoder cable is normal. Make sure the encoder cable is separated from the power cable or any high-current cables to avoid interference. 3. Use a shielded encoder cable and correctly ground the shield. 4. Check the motor speed and make sure it is within the rated range. If the issue persists, send your servo motor back to the distributor or contact Delta.
How to clear the alarm?	DI.ARST or cycle power on the servo drive.

AL042 Voltage input for analog Speed command is too high	
Trigger condition and cause	Voltage input for the analog Speed command is higher than the level specified by P1.083.
Checking method and corrective action	Check and make sure the voltage source for the analog Speed command is correct. Check the value of P1.083, and if this function is not required, set it to 0.
How to clear the alarm?	DI.ARST

AL044 Servo function operational warning	
Trigger condition and cause	Condition: too many motor control functions on the servo drive are enabled. Cause: servo function operational alarm.
Checking method and corrective action	1. If using a filter, see if using the filter is necessary. 2. Set P2.066 [Bit 4] = 1 to disable this alarm.
How to clear the alarm?	1. Disable the filter if it is not required, such as the low-pass filter (P1.006 - P1.008), moving filter (P1.068), low-frequency vibration suppression (P1.025 - P1.028), Notch filter (1st to 3rd sets), percentage of friction compensation (P1.062), and motor hard stop - torque percentage (P1.057). 2. Set P2.066 [Bit 4] to 1 and cycle power on the servo drive.

AL045 E-Gear ratio value error	
Trigger condition and cause	Condition: when the value of the E-Gear ratio exceeds the range (1 - 262144), this alarm occurs once the power is cycled on the servo drive. Cause: the E-Gear ratio value is found to be in error after the servo drive is powered on.
Checking method and corrective action	Check if the value of the E-Gear ratio is within the allowable range (1 - 262144). If not, correct the value and then cycle power on the servo drive.
How to clear the alarm?	Cycle power on the servo drive after correcting the value.

AL060 Absolute position is lost	
Trigger condition and cause	Condition: the absolute encoder loses the recorded number of revolutions because of low battery voltage or power loss. Cause: 1. The battery voltage is too low. 2. The battery is replaced when the power to the servo drive is Off. 3. The battery is not installed when the absolute function is enabled. 4. Poor contact or disconnection of the battery power circuit.
Checking method and corrective action	1. Check if the battery voltage is below 2.9V. Re-establish the absolute origin position after replacing the battery. 2. Do not replace or remove the battery when the power to the servo drive is Off. 3. Follow these instructions: (a) Install the battery. (b) Check the wiring between the battery box and the servo drive. (c) Check the encoder wiring. 4. Ensure the wiring is correct so that the battery power is supplied to the encoder and then re-establish the absolute origin position.
How to clear the alarm?	Reconnect or correct the wiring so that the battery power is supplied to the encoder and then re-establish the absolute origin position. For establishing the absolute origin position, refer to Section 10.3.4 for details.

AL061 Encoder undervoltage	
Trigger condition and cause	Condition: the battery voltage of the absolute encoder is below 3.1V. Cause: the battery voltage is too low.
Checking method and corrective action	1. Set P0.002 = 38 to monitor if the battery voltage is below 3.1V. 2. Measure the battery voltage to see if it is below 3.1V. 3. If the voltage is too low, replace the battery when the servo drive's power is On.
How to clear the alarm?	The alarm is cleared automatically when the battery voltage is above 3.1V.

AL062 Number of revolutions of the absolute encoder overflows (issued by encoder)	
Trigger condition and cause	Condition: the number of revolutions of the absolute motor exceeds the range of -32768 to +32767. Cause: the number of revolutions of the motor exceeds the allowable range.
Checking method and corrective action	1. Check if the number of revolutions of the motor during operation is within the range of -32768 to +32767. If not, re-establish the absolute origin position. 2. Make sure you have enabled the function of preventing rotary axis position offset when overflow occurs. If the function is disabled, set P2.069.Z = 1 to enable it.
How to clear the alarm?	Cycle power on the servo drive.

AL064 Encoder vibration warning	
Trigger condition and cause	Condition: abnormal vibration occurred in the encoder. Cause: the internal signal or mechanical part of the encoder is abnormal, so the encoder returns a warning signal.
Checking method and corrective action	Check if the motor vibration is within the warning range (2.0 G to 2.5 G). If the vibration is below the warning range but the alarm still occurs, send your servo motor back to the distributor or contact Delta.
How to clear the alarm?	DI.ARST or cycle power on the servo drive.

AL067 Encoder temperature warning	
Trigger condition and cause	Condition: the encoder temperature is over the warning level of 85°C (185°F), but still below the upper limit of 100°C (212°F). Cause: encoder temperature warning (85°C to 100°C).
Checking method and corrective action	Set P0.002 = -124 to monitor the encoder temperature and check if it matches the motor temperature. If the temperature is too high, improve the heat dissipation or decrease the operating temperature. If the temperature difference between the encoder and motor is over 30°C (54°F), send your servo motor back to Delta.
How to clear the alarm?	Cycle power on the servo drive.

AL069 Wrong motor type	
Trigger condition and cause	The incremental motor does not support the absolute function.
Checking method and corrective action	1. Check whether your servo motor has an incremental or absolute encoder. 2. Check the setting of P2.069 and correctly set the value. Set P2.069.X = 0 if desiring to operate the absolute motor as an incremental motor.
How to clear the alarm?	Set P2.069.X = 0 and then cycle power on the servo drive.

AL06A Absolute position is lost	
Trigger condition and cause	There are two conditions that may cause the loss of absolute position. ■ Absolute position is not established. Condition: 1. The servo drive is used for the first time. 2. The battery is drained and the power to the servo drive is cut off. Cause: 1. The servo drive is used for the first time, so the absolute origin position is not established. 2. Retaining the absolute position requires power supply, so when the battery is drained and the power to the servo drive is cut off, the absolute position of the servo is lost. ■ AL06A occurs even after the absolute origin position is established and the drive is power cycled. Condition: 1. The encoder cable is damaged, including the exterior and internal wiring. 2. There is a momentary power failure in the battery power supply. 3. The absolute motor is in error. 4. The battery box is used with J1 and J2 reversely connected. 5. The battery voltage is below 2.9V. Cause: 1. Power to the encoder is unstable due to cable damage. 2. The reason for the momentary power failure may be that the battery box connector is loose or excessive machine vibration. 3. The absolute encoder of this motor is in error. 4. If J1 and J2 are connected reversely, the battery cannot charge the capacitor. The capacitor functions as a buffer to supply power when the power to the servo drive is switched to the battery due to a main power failure.
Checking method and corrective action	1. Check if the absolute origin position is established. 2. Replace the battery only when the servo drive is powered on, so the absolute encoder has a continuous power supply. 3. Replace the servo motor. 4. Ensure J1 is connected to the battery and J2 is connected to the servo drive. 5. Replace the encoder cable. Use the X-ray to check if the internal wiring is damaged. 6. Check if the wiring is loose. If the wiring is fine, replace the battery box for cross-testing. 7. Re-establish the absolute origin position.
How to clear the alarm?	The alarm is automatically cleared after you establish the absolute origin position.

AL070 Encoder did not complete the read / write procedure	
Trigger condition and cause	Reading and writing commands are not complete.
Checking method and corrective action	Check if the wiring is correct or the connector is firmly connected. If not, correctly connect the wire again. Contact Delta if this error persists.
How to clear the alarm?	Cycle power on the servo drive.

AL083 Servo drive outputs excessive current	
Trigger condition and cause	Condition: during normal operation, this alarm occurs when the servo drive outputs current that is over the allowable level specified by the firmware. This alarm protects IGBT from overheating or burning caused by the high current. Cause: 1. UVW of the servo drive is short-circuited. 2. The motor wiring is in error. 3. The GND for the analog signal of the servo drive is interfered.
Checking method and corrective action	1. Check the motor power cable and power connector. If the metal conductor is exposed or the wire is torn, the UVW can short-circuit. In this case, replace the power cable to fix the short circuit. 2. Refer to Chapter 3 Wiring and check the following items: (a) If you do not use the Delta standard power cable, make sure the UVW wiring sequence is correct. (b) Make sure the UVW wiring between the servo drive and motor is correctly connected. 3. Check if the GND for analog signal is mistakenly connected to another ground signal (incorrect connection can cause interference). Do not share the GND for analog signal with other signal sources. Follow the wiring instructions in Chapter 3.
How to clear the alarm?	DI.ARST

AL085 Regeneration setting error	
Trigger condition and cause	Condition: regeneration control error. Cause: the Vbus voltage is higher than 390V, and it cannot fall within the normal range after the brake starts operating for a period of time.
Checking method and corrective action	Check the connection for the regenerative resistor and re-calculate the resistance value. Correctly set the values of P1.052 and P1.053. If the issue persists, send your servo drive back to Delta.
How to clear the alarm?	After the alarm occurs, wait until the time set in P2.123 has elapsed and then reset the alarm.

AL086 Regenerative resistor overload	
Trigger condition and cause	Condition: excessive energy in the capacitor of the servo drive is released to the regenerative resistor, causing overload of the resistor. Cause: 1. Incorrect selection of or no connection to an external regenerative resistor. 2. Incorrect parameter settings for P1.052 and P1.053. 3. Other energy (such as interference) is input to the servo drive or the input voltage is higher than the allowable rated voltage. 4. Malfunction of the servo drive hardware.
Checking method and corrective action	1. Check the connection for the regenerative resistor and correctly set the values of P1.052 and P1.053. 2. Reassess whether the regenerative energy exceeds the value of P1.053. If so, use another regenerative resistor of higher capacity. 3. Use a voltmeter to measure if the input voltage of the power supply is within the allowable rated voltage (refer to Appendix A Specifications). If not, remove the interference source. 4. Measure the voltage between P and ⊖ terminals. If it does not match the DC Bus voltage monitored by setting P0.002 to 14, the servo drive is malfunctioning. Send your servo drive back to the distributor or contact Delta. 5. If you took the preceding actions and the issue persists, use a scope with a differential probe to measure whether the input voltage has high-frequency signal interference. If there is interference, remove the interference source, and use the correct power supply or install a regulator.
How to clear the alarm?	After the alarm occurs, wait until the time set in P2.123 has elapsed and then reset the alarm.

AL095 Regenerative resistor is disconnected or regenerative circuit is in error	
Trigger condition and cause	1. The value of P1.053 (Regenerative resistor capacity) is greater than 0, but no external regenerative resistor is connected. 2. The regenerative circuit is in error.
Checking method and corrective action	1. Ensure to connect the regenerative resistor to the servo drive and check if the value of P1.053 is correct. 2. If the servo drive does not have a built-in regenerative resistor and does not need an external regenerative resistor, set P1.053 to 0. 3. Check if the regenerative resistor is disconnected. If the issue persists, send your servo drive back to the distributor or contact Delta.
How to clear the alarm?	Cycle power on the servo drive.

AL099 DSP firmware error	
Trigger condition and cause	EEPROM is not reset after DSP firmware is updated.
Checking method and corrective action	Check if the firmware is updated. If so, set P2.008 to 30 and then 28. Next, cut off the power, wait until the CHARGE indicator is Off, and then cycle power on the servo drive. Contact Delta if this error persists.
How to clear the alarm?	Set P2.008 to 30 and then 28. Next, cut off the power, wait until the CHARGE indicator is Off, and then cycle power on the servo drive.

AL207 Parameter group of the data source for Type [8] PR is out of range	
Trigger condition and cause	Condition: when the data source for Type [8] PR path is specified as a parameter, the parameter group is out of range. Cause: parameter group exceeds the range.
Checking method and corrective action	Write a parameter using PR path: when the data source is a parameter and the group setting exceeds the range, check the setting range of the group for the written parameter.
How to clear the alarm?	DI.ARST

AL209 Parameter number of the data source for Type [8] PR is out of range	
Trigger condition and cause	Condition: when the data source for Type [8] PR path is specified as a parameter, the parameter number is out of range. Cause: parameter number exceeds the range.
Checking method and corrective action	Write a parameter using PR path: when the data source is a parameter and the parameter number setting exceeds the range, check the setting range of the number for the written parameter.
How to clear the alarm?	DI.ARST

AL211 Parameter format setting of Type [8] PR is in error	
Trigger condition and cause	Condition: parameter format setting of Type [8] PR path is in error. Cause: 1. Incorrect parameter format. 2. The ASDA-Soft software version and the firmware version are not compatible.
Checking method and corrective action	1. Check if the parameter format is correct. 2. Check if you are using the latest version of ASDA-Soft. If you took the corrective actions but the issue persists, contact the local distributor or technician.
How to clear the alarm?	DI.ARST

AL213 Parameter setting of Type [8] PR is in error	
Trigger condition and cause	Condition: when you use Type [8] PR path to write a parameter, the parameter value is incorrect. Cause: an error occurs when you write a parameter with Type [8] PR path.
Checking method and corrective action	Make sure the parameter value is within the correct range.
How to clear the alarm?	DI.ARST

AL215 Parameter written with Type [8] PR is read-only	
Trigger condition and cause	Condition: the read-only parameter is written with Type [8] PR path. Cause: an error occurs when you write a parameter with Type [8] PR path.
Checking method and corrective action	The specified parameter is read-only.
How to clear the alarm?	DI.ARST

AL217 Parameter written with Type [8] PR is write-protected when Servo On	
Trigger condition and cause	Condition: when you use Type [8] PR path to write a parameter, the parameter is write-protected when the servo drive is On or the parameter value exceeds the range. Cause: an error occurs when you write a parameter with Type [8] PR path.
Checking method and corrective action	Write a parameter when the servo drive is Off and make sure the parameter value is within the range.
How to clear the alarm?	Modify the parameter setting in the PR path.

AL219 Parameter written with Type [8] PR is write-protected	
Trigger condition and cause	Condition: the parameter written with Type [8] PR path is write-protected. Cause: the parameter write-protected function is enabled.
Checking method and corrective action	Check if the parameter and data array protection function (P5.097) is enabled.
How to clear the alarm?	Disable the parameter and data array protection function or reset the parameters.

AL231 Monitoring variable code specified with Type [8] PR is out of range	
Trigger condition and cause	Condition: when the data source for Type [8] PR path is specified as a monitoring variable, the monitoring variable code is out of range. Cause: the monitoring variable code exceeds the range.
Checking method and corrective action	Write a monitoring variable using PR path: when the data source is a monitoring variable and the code exceeds the range, check the setting range of the code for the monitoring variable.
How to clear the alarm?	DI.ARST

AL235 Position counter overflow warning	
Trigger condition and cause	Condition: a positioning command is executed after the position command counter overflows. Cause: the position command counter overflows.
Checking method and corrective action	Incremental system: When the motor keeps operating in one direction, this leads to overflow of the position feedback register (FB_PUU), and the position system cannot display the correct position. Issuing a positioning command after the overflow results in AL235. Use the Scope function of ASDA-Soft to check if the position feedback has overflowed and then execute the homing procedure. Absolute system: AL235 occurs when the absolute positioning command is issued in the following conditions: 1. Position feedback register (FB_PUU) overflows. 2. Absolute origin position is not established after the setting of P1.001.Z is changed. 3. Absolute origin position is not established after the E-Gear ratio (P1.044 and P1.045) is changed. 4. The absolute origin position is established, but the homing procedure is incomplete. 5. When AL060 and AL062 occur, use the Scope function of ASDA-Soft to check if the position feedback has overflowed. Check whether the preceding conditions have occurred and then establish the absolute origin position.
How to clear the alarm?	Incremental system: perform homing procedure. Absolute system: establish the absolute origin position.

AL237 Rotary axis position is undefined	
Trigger condition and cause	The starting point of the rotary axis position is not defined before you operate the rotary axis position control and execute the rotary axis positioning command. This alarm occurs because the servo drive cannot identify the rotary axis position system.
Checking method and corrective action	Check if the rotary axis position is undefined: perform the homing procedure before using the rotary axis position control to avoid triggering this alarm.
How to clear the alarm?	DI.ARST

AL245 PR positioning timeout	
Trigger condition and cause	Condition: PR positioning function is triggered. Cause: the time for executing positioning is too long.
Checking method and corrective action	Check if the conditions for completing the PR paths are not set or not triggered, causing the PR path to be incomplete.
How to clear the alarm?	DI.ARST or cycle power on the servo drive.

AL249 PR path is out of range	
Trigger condition and cause	Condition: the PR command jumps to a path exceeding the maximum. Cause: the PR command jumps to a path exceeding 63.
Checking method and corrective action	1. Check if the PR command jumps to a path exceeding the range. 2. Check if the PR path format is correct.
How to clear the alarm?	DI.ARST or cycle power on the servo drive.

AL283 Software positive limit	
Trigger condition and cause	Condition: the position feedback exceeds the software positive limit. Cause: the software positive limit is triggered.
Checking method and corrective action	Software positive limit triggering is determined by the position feedback. Set an appropriate deceleration time to achieve the desired effect. For more information, refer to the description of P5.003.
How to clear the alarm?	The alarm is automatically cleared after the motor moves away from the limit.

AL285 Software negative limit	
Trigger condition and cause	Condition: the position feedback exceeds the software negative limit. Cause: the software negative limit is triggered.
Checking method and corrective action	Software negative limit triggering is determined by the position feedback. Set an appropriate deceleration time to achieve the desired effect. For more information, refer to the description of P5.003.
How to clear the alarm?	The alarm is automatically cleared after the motor moves away from the limit.

AL289 Position counter overflows	
Trigger condition and cause	Position counter overflows.
Checking method and corrective action	1. Set the E-Gear ratio according to the actual application requirements and the total traveling distance of the absolute motor to avoid overflow of the feedback counter. 2. If enabling the function of preventing the rotary axis position offset when overflow occurs (P2.069.Z = 1), set P2.070 [Bit 2] to 1 (no overflow warning).
How to clear the alarm?	DI.ARST

AL35F Emergency stop during deceleration	
Trigger condition and cause	The rising edge of DI.PFQS (0x47) is triggered, and then the motor decelerates to 0 and triggers AL3CF.
Checking method and corrective action	Check if any of the parameters P2.010 - P2.017 and P2.036 - P2.040 is set to 0x47 and the corresponding DI is triggered.
How to clear the alarm?	Cycle power on the servo drive.

AL380 Position offset alarm for DO.MC_OK	
Trigger condition and cause	DO.MC_OK is On and then turns Off.
Checking method and corrective action	Refer to the description of P1.048. After DO.MC_OK is On, DO.MC_OK then turns Off because DO.TPOS is Off. There might be an external force causing the position offset of the motor after positioning is complete. Disable this alarm by setting P1.048.Y to 0.
How to clear the alarm?	DI.ARST

AL3CF Emergency stop	
Trigger condition and cause	After AL35F is triggered and the motor has decelerated to 0, this alarm occurs.
Checking method and corrective action	Check if any of the parameters P2.010 - P2.017 and P2.036 - P2.040 is set to 0x47 and the corresponding DI is triggered.
How to clear the alarm?	DI.ARST

AL400 Rotary axis position setting error	
Trigger condition and cause	Condition: the position offset of the motor in 1 ms exceeds the setting of P2.052 (Rotary axis position scale). Cause: the value of P2.052 is set too small.
Checking method and corrective action	Check if P2.052 is set according to the specifications in the manual.
How to clear the alarm?	DI.ARST

AL404 PR special filter setting value is too great	
Trigger condition and cause	Condition: the value of P1.022 (PR command special filter) is set too great, causing the following error of the internal position to exceed the allowable range. Cause: the following error of the internal position exceeds the allowable range.
Checking method and corrective action	Check the setting of P1.022. If the value is too great, the following error exceeds the allowable range in a short time. Properly adjust the value of P1.022.
How to clear the alarm?	DI.ARST

AL555 System failure	
Trigger condition and cause	Servo drive DSP is in error.
Checking method and corrective action	If this alarm occurs, send your servo drive directly back to Delta without making any modification.
How to clear the alarm?	N/A

AL809 PR motion setting error or command decoding error	
Trigger condition and cause	Condition: an error occurs when the servo drive decodes the motion command. Cause: incorrect motion command or abnormal software compiling may cause error in the PR program.
Checking method and corrective action	1. If this alarm occurs when the servo is not in PR mode, save the parameter file and provide it to the distributor. 2. For advanced users: save the scope screenshot when the alarm occurs. Set two of the channels to P5.007 and P0.001, and then save the oscillogram.
How to clear the alarm?	Cycle power on the servo drive.

ALC31 Motor power cable disconnection	
Trigger condition and cause	Condition: disconnection of the motor power cable (U, V, W) and ground wire (GND). Cause: disconnection of the motor power cable (U, V, W) and ground (GND). The detection for motor power cable disconnection is set by P2.065 [Bit 9], which is enabled by default.
Checking method and corrective action	Check if the motor power cable (U, V, W) and ground wire (GND) are firmly connected. Follow the instructions in this user manual to properly connect the motor power cable and ground wire.
How to clear the alarm?	Cycle power on the servo drive.

Specifications Appendix A

A.1 ASDA-E3C-L servo drive ····· A-3
A.1.1 Specifications of the ASDA-E3C-L servo drive ····· A-3
A.1.1.1 220V models ····· A-3
A.1.1.2 400V models ····· A-6
A.1.2 Dimensions of the servo drive ····· A-9
A.1.2.1 220V models ····· A-9
A.1.2.2 400V models ····· A-11
A.2 ECM-E3 series servo motor ····· A-12
A.2.1 Specifications of ECM-E3 motors ····· A-12
A.2.1.1 220V models ····· A-12
F80 and below motors (low & medium inertia) ····· A-12
F80 and below motors (high inertia) ····· A-14
F130 motors (medium & high inertia) ····· A-16
A.2.1.2 400V models ····· A-18
F80 and below motors (medium inertia) ····· A-18
F100 motors (medium inertia) ····· A-20
F130 motors (medium & high inertia) ····· A-22
F180 motors (medium inertia) ····· A-24
A.2.2 Torque features (T-N curves) of the ECM-E3 motors ····· A-26
A.2.2.1 220V models ····· A-26
F80 and below motors ····· A-26
F130 motors ····· A-27
A.2.2.2 400V models ····· A-28
F80 and below motors ····· A-28
F100 motors ····· A-28
F130 motors ····· A-29
F180 motors ····· A-29
A.2.3 Power derating curves of the ECM-E3 motors ····· A-30
A.2.4 Overload features ····· A-31
A.2.5 Dimensions of ECM-E3 series servo motor ····· A-33
A.2.5.1 220V models ····· A-33
F80 and below motors with cables (low & medium inertia) ····· A-33

A

F80 and below motors with bulkhead receptacles
(low & medium & high inertia) ····· A-34
F130 motors (medium & high inertia) ····· A-35
A.2.5.2 400V models ····· A-36
F80 and below motors with cables (medium inertia) ····· A-36
F100 models (medium inertia) ····· A-37
F130 motors (medium & high inertia) ····· A-38
F180 motors (medium inertia) ····· A-39

A.1 ASDA-E3C-L servo drive

A.1.1 Specifications of the ASDA-E3C-L servo drive

A.1.1.1 220V models

ASD-E3C-			400 W	400 W	750 W	1 kW	1.5 kW
			0421-L1	0421-L	0721-L	1021-L	1521-L
Main circuit power	Phase / Voltage		Single-phase 220 V_{AC}				
	Permissible voltage		Single-phase 200 to 230 V_{AC}, -15% to +10%				
	Input current (1PH) (Arms)		3.7	3.7	6.37	10.0	11.3
Continuous output current (Arms)			2.65	2.65	5.1	7.3	8.3
Max. instantaneous output current (Arms)			10.6	10.6	14.14	21.21	27
Regenerative resistor	Built-in	Resistance (ohm)	100	-	100	100	100
		Capacity (Watt)	36	-	36	40	40
	External	Min. allowable resistance (ohm)	60	60	60	30	30
Dynamic brake*2			N/A	N/A	N/A	N/A	N/A
Cooling method			Air convection cooling			Fan cooling	

Note:

1. The input current is the actual value measured at 220 V_{AC} when the servo drive is under the rated output condition.
2. The dynamic brake is activated when power to the servo drive is lost.

A

Specification table

Item			Specification
Servo drive resolution			24-bit (16777216 p/rev)
Main circuit control			SVPWM control
Tuning mode			Manual / Auto
Position control mode	Pulse type		Pulse train + sign, CCW pulse + CW pulse, A phase + B phase
	Max. input pulse frequency		Pulse train + sign: 4 Mpps CCW pulse + CW pulse: 4 Mpps A phase + B phase: single-phase 2 Mpps Open collector: 200 Kpps
	Command source		External pulse / Register
	Smoothing method		Low-pass filter; S-curve filter; moving filter
	E-Gear ratio		E-Gear ratio: N/M times; 1 ≤ N/M ≤ 262144
	Torque limit		Parameter settings
	Feedforward compensation		Parameter settings
Speed control mode	Analog command input	Voltage range	-10 to +10 V_{DC}
		Resolution	12-bit
		Input impedance	1 MΩ
		Time constant	25 μs
	Speed control range[*1]		1 : 6000
	Command source		Register / External analog command
	Smoothing method		Low-pass filter; S-curve filter; moving filter
	Torque limit		Parameter settings / Analog input
	Bandwidth		2.5 kHz
	Speed calibration ratio[*2]		Max. ±0.01% at 0% to 100% load fluctuation
			Max. ±0.01% at ±10% power fluctuation
			Max. ±0.01% at ambient temperature of 0°C to 45°C (32°F to 113°F)
Torque control mode	Analog command input	Voltage range	-10 to +10 V_{DC}
		Resolution	12-bit
		Input impedance	1 MΩ
		Time constant	25 μs
	Command source		Register / External analog command
	Smoothing method		Low-pass filter
	Speed limit		Parameter settings / Analog input
Analog monitor output			Monitor signals can be set by parameter (voltage output range: ±8V); resolution: 10-bit
Digital input			9 DI points. Refer to Chapter 8 for the function settings.
Digital output			6 DO points. Refer to Chapter 8 for the function settings.
Protection function			Overcurrent, Overvoltage, Undervoltage, Abnormal IGBT temperature, Regeneration error, Overload, Excessive deviation of Speed command, Excessive deviation of Position command, CN2 communication failed, Emergency stop, Negative / positive limit error, Main power error, Short-circuit protection for terminals U, V, W, and so on.
Communication interface			RS-485 / RS-232
Environment	Installation site		Indoors (avoid direct sunlight), no corrosive vapor (avoid fumes, flammable gases, and dust)
	Altitude		Less than 2,000 m above sea level
	Atmospheric pressure		86 kPa - 106 kPa
	Ambient temperature		0°C to 55°C (32°F to 131°F) (If the ambient temperature is above 45°C (113°F), a derating of 10% for every temperature increase of 5°C (9°F) and forced cooling are required.)
	Storage temperature		-20°C to +65°C (-4°F to +149°F)
	Humidity		10 - 90% RH (non-condensing)
	Vibration		10 Hz to 57 Hz: 0.075 mm amplitude; 58 Hz to 150 Hz: 1 G

Item		Specification
Environment	IP rating	IP20
	Power system	TN system / TT system
	Approvals	IEC/EN 61800-5-1 CE

Note:
1. Within the rated load, the speed ratio is: the minimum speed (smooth operation) / rated speed.
2. Within the rated speed, the speed calibration ratio is: (rotation speed with no load - rotation speed with full load) / rated speed.

Use a single-phase three-wire power system for models using a single-phase power supply.

A

A.1.1.2 400V models

ASD-E3C-			1 kW	1.5 kW	2 kW	3 kW
			1043-L	1543-L	2043-L	3043-L
Main circuit power	Phase / Voltage		Three-phase 400 V_{AC}			
	Permissible voltage		Three-phase 380 to 440 V_{AC}, -10% to +10%			
	Input current (1PH) (Arms)		2.91	3.52	5.06	6.14
Continuous output current (Arms)			3.37	4.09	5.96	9.11
Max. instantaneous output current (Arms)			7.07	10.6	18.98	27.33
Regenerative resistor	Built-in	Resistance (ohm)	100	100	50	50
		Capacity (Watt)	80	80	80	80
	External	Min. allowable resistance (ohm)	80	60	45	40
Dynamic brake*2			Built-in	Built-in	Built-in	Built-in
Cooling method			Fan cooling			

Note:
1. The input current is the actual value measured at 400 V_{AC} when the servo drive is under the rated output condition.
2. The dynamic brake is activated when power to the servo drive is lost.

Specification table

Item			Specification
Servo drive resolution			24-bit (16777216 p/rev)
Main circuit control			SVPWM control
Tuning mode			Manual / Auto
Position control mode	Pulse type		Pulse train + sign, CCW pulse + CW pulse, A phase + B phase
	Max. input pulse frequency		Pulse train + sign: 4 Mpps CCW pulse + CW pulse: 4 Mpps A phase + B phase: single-phase 2 Mpps Open collector: 200 Kpps
	Command source		External pulse / Register
	Smoothing method		Low-pass filter; S-curve filter; moving filter
	E-Gear ratio		E-Gear ratio: N/M times; 1 ≤ N/M ≤ 262144
	Torque limit		Parameter settings
	Feedforward compensation		Parameter settings
Speed control mode	Analog command input	Voltage range	-10 to +10 V_{DC}
		Resolution	12-bit
		Input impedance	1 MΩ
		Time constant	25 μs
	Speed control range[*1]		1 : 6000
	Command source		Register / External analog command
	Smoothing method		Low-pass filter; S-curve filter; moving filter
	Torque limit		Parameter settings / Analog input
	Bandwidth		2.5 kHz
	Speed calibration ratio[*2]		Max. ±0.01% at 0% to 100% load fluctuation
			Max. ±0.01% at ±10% power fluctuation
			Max. ±0.01% at ambient temperature of 0°C to 45°C (32°F to 113°F)
Torque control mode	Analog command input	Voltage range	-10 to +10 V_{DC}
		Resolution	12-bit
		Input impedance	1 MΩ
		Time constant	25 μs
	Command source		Register / External analog command
	Smoothing method		Low-pass filter
	Speed limit		Parameter settings / Analog input
Analog monitor output			Monitor signals can be set by parameter (voltage output range: ±8V); resolution: 10-bit
Digital input			9 DI points. Refer to Chapter 8 for the function settings.
Digital output			6 DO points. Refer to Chapter 8 for the function settings.
Protection function			Overcurrent, Overvoltage, Undervoltage, Abnormal IGBT temperature, Regeneration error, Overload, Excessive deviation of Speed command, Excessive deviation of Position command, CN2 communication failed, Emergency stop, Negative / positive limit error, Main power error, Short-circuit protection for terminals U, V, W, and so on.
Communication interface			RS-485 / RS-232
Environment	Installation site		Indoors (avoid direct sunlight), no corrosive vapor (avoid fumes, flammable gases, and dust)
	Altitude		Less than 2,000 m above sea level
	Atmospheric pressure		86 kPa - 106 kPa
	Ambient temperature		0°C to 55°C (32°F to 131°F) (If the ambient temperature is above 45°C (113°F), a derating of 10% for every temperature increase of 5°C (9°F) and forced cooling are required.)
	Storage temperature		-20°C to +65°C (-4°F to +149°F)
	Humidity		10 - 90% RH (non-condensing)
	Vibration		10 Hz to 57 Hz: 0.075 mm amplitude; 58 Hz to 150 Hz: 1 G

Item		Specification
Environment	IP rating	IP20
	Power system	TN system / TT system
	Approvals	IEC/EN 61800-5-1 CE

A

Note:
1. Within the rated load, the speed ratio is: the minimum speed (smooth operation) / rated speed.
2. Within the rated speed, the speed calibration ratio is: (rotation speed with no load - rotation speed with full load) / rated speed.

A.1.2 Dimensions of the servo drive

A.1.2.1 220V models

400 W

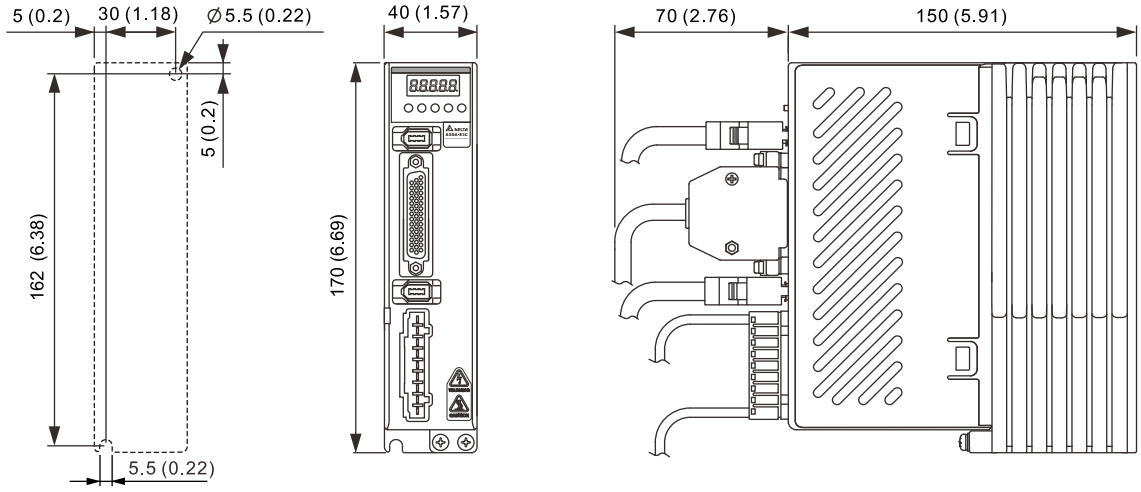

Weight	0.75 kg (1.65 lb)

750 W

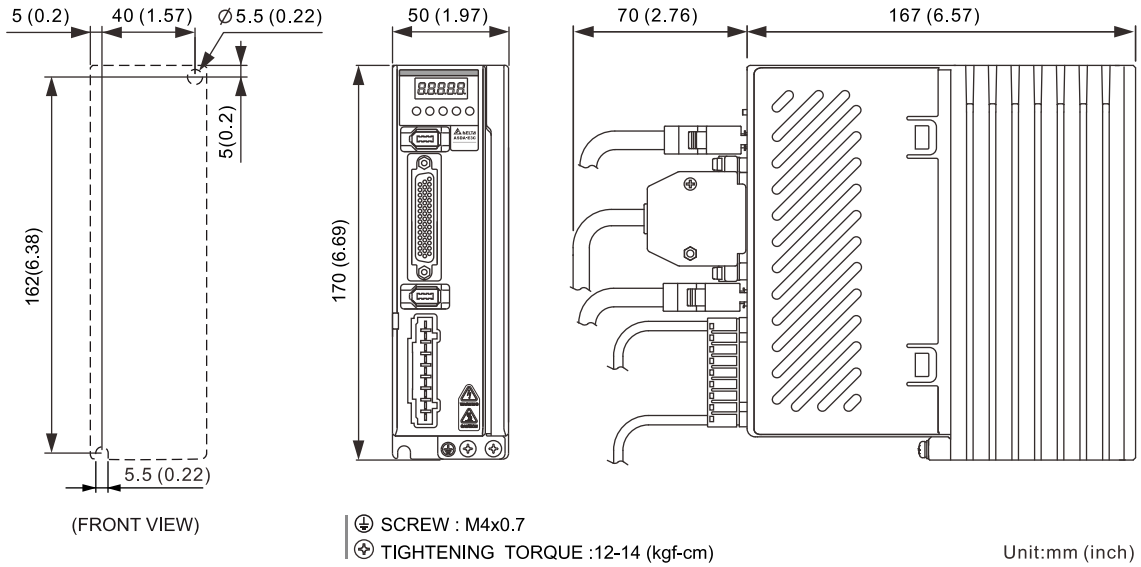

Weight	1.15 kg (2.54 lb)

A

1 kW / 1.5 kW

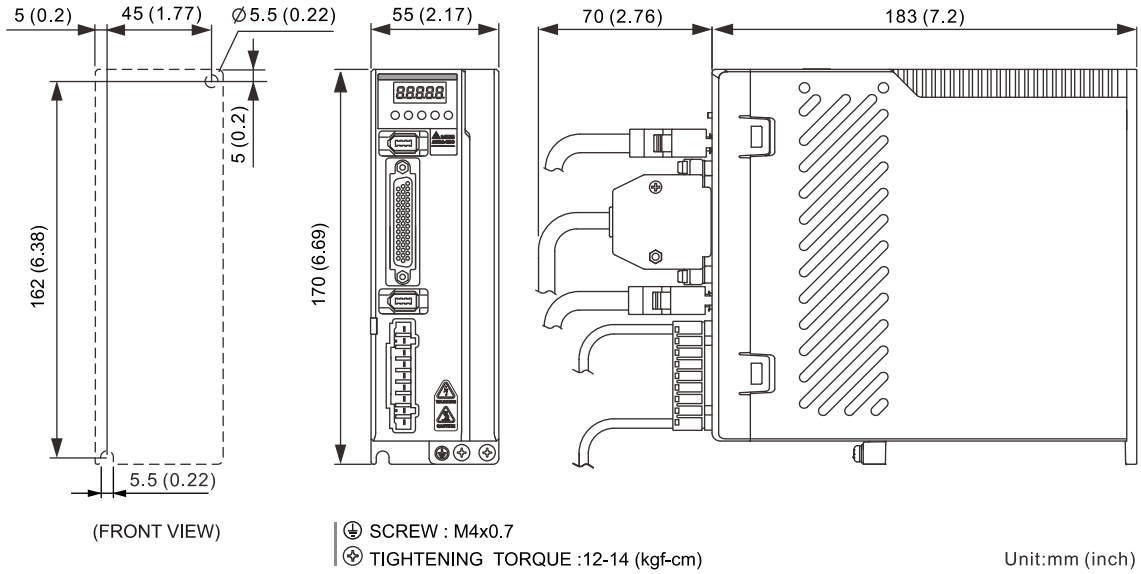

Weight	1.08 kg (2.4 lb)

Note: dimensions and weights of the servo drives may be updated without prior notice.

A.1.2.2 400V models

1 kW / 1.5 kW

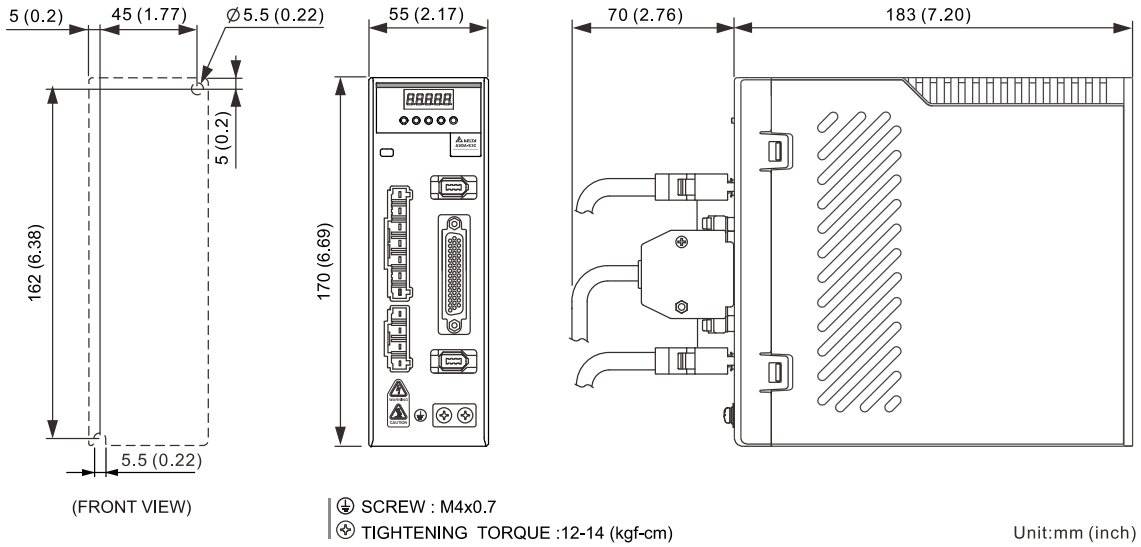

Weight	1.23 kg (2.7 lb)

2 kW / 3 kW

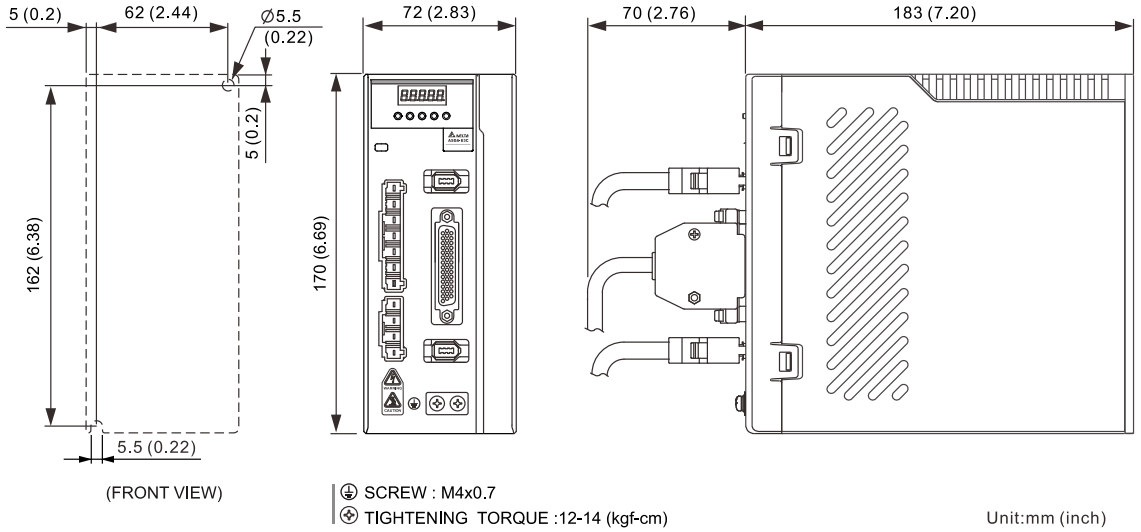

Weight	1.53 kg (3.37 lb)

Note: dimensions and weights of the servo drives may be updated without prior notice.

A.2 ECM-E3 series servo motor

A.2.1 Specifications of ECM-E3 motors

A.2.1.1 220V models

A

F80 and below motors (low & medium inertia)

ECM-		E3L-C□0401□□E	E3M-C□0602□□E	E3M-C□0604□□E	E3M-C□0807□□E
Rated power (kW)		0.1	0.2	0.4	0.75
Rated torque (N·m)[*1]		0.32	0.64	1.27	2.4
Max. torque (N·m)		1.12	2.24	4.45	8.4
Rated speed (rpm)		3000			
Max. speed (rpm)		6000			
Rated current (Arms)		0.857	1.42	2.40	4.27
Max. instantaneous current (Arms)		3.44	6.62	9.47	15.8
Change of rated power (kW/s)	No brake	34.25	29.05	63.50	53.83
	With brake	32.51	27.13	61.09	50.97
Rotor inertia ($\times 10^{-4}$ kg·m^2)	No brake	0.0299	0.141	0.254	1.07
	With brake	0.0315	0.151	0.264	1.13
Mechanical time constant (ms)	No brake	0.50	0.91	0.52	0.54
	With brake	0.53	0.97	0.54	0.57
Torque constant-KT (N·m/Arms)		0.374	0.45	0.53	0.56
Voltage constant-KE (mVrms/rpm)		13.8	16.96	19.76	20.17
Armature resistance (ohm)		8.22	4.71	2.04	0.55
Armature inductance (mH)		19.1	12.18	6.50	2.81
Electrical time constant (ms)		2.32	2.59	3.19	5.11
Weight (kg)	No brake	0.5	0.9	1.2	2.34
	With brake	0.7	1.3	1.6	3.15
Max. radial load (N)[*4]		78	245	245	392
Max. axial load (N)[*4]		54	74	74	147
Brake operating voltage		24 V_{DC} ± 10%			
Brake power consumption (at 20°C (68°F)) [W]		6.1	7.6	7.6	8.5
Brake holding torque [N·m (Min)][*2]		0.3	1.3	1.3	3.2
Brake release time [ms (Max)]		20	20	20	30
Brake pull-in time [ms (Max)]		35	50	50	60
Derating rate (with oil seal) (%)		10	10	5	5
Insulation class		Class A (UL), Class B (CE)			
Insulation resistance		100 MΩ min. (at 500 V_{DC})			
Insulation strength		1.8 kV_{AC}, 1 sec			
Vibration grade		V15			
Ambient temperature		-20°C to +60°C (-4°F to +140°F)[*3]			
Storage temperature		-20°C to +80°C (-4°F to +176°F)			
Ambient and storage humidity		20 - 90% RH (non-condensing)			
Vibration capacity		2.5 G			
IP rating		IP67 (for models using waterproof connectors and shaft seals or oil seals)			
Approvals		CE			

Note:

1. The rated torque is the permissible continuous torque when the motor mounted with the heat sink of the following dimensions is operating in a temperature range of 0°C - 40°C (32°F - 104°F).
   F40, F60, and F80: 250 mm x 250 mm x 6 mm
   Material: aluminum
2. The built-in motor brake is only for keeping the machine connected to the motor in a stopped state. Do not use it for deceleration or as a dynamic brake.
3. If the ambient temperature is over 40°C (104°F), refer to Section A.2.3 Power derating curves of the ECM-E3 motors.
4. Follow the load specification for the motor shaft during operation. The load types for the motor shaft are defined as follows.

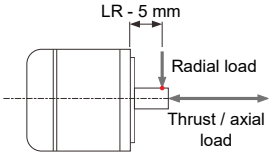

A

F80 and below motors (high inertia)

ECM-		E3H-C□0602□□E	E3H-C□0604□□E	E3H-C□0807□□E
Rated power (kW)		0.2	0.4	0.75
Rated torque (N·m)[*1]		0.64	1.27	2.4
Max. torque (N·m)		2.43	4.83	9.12
Rated speed (rpm)		3000	3000	3000
Max. speed (rpm)		6700	6700	6700
Rated current (Arms)		1.51	2.21	4.19
Max. instantaneous current (Arms)		6.12	8.46	16.3
Change of rated power (kW/s)	No brake	15.5	30.8	37.2
	With brake	14.6	30.0	35.6
Rotor inertia ($\times 10^{-4}$ kg·m^2)	No brake	0.265	0.523	1.55
	With brake	0.280	0.538	1.62
Mechanical time constant (ms)	No brake	1.78	1.31	0.825
	With brake	1.88	1.34	0.862
Torque constant-KT (N·m/Arms)		0.424	0.575	0.573
Voltage constant-KE (mVrms/rpm)		15.3	20.8	20.2
Armature resistance (ohm)		4.17	2.85	0.588
Armature inductance (mH)		2	3.5	1
Electrical time constant (ms)		0.48	1.23	1.70
Weight (kg)	No brake	0.70	1.05	2.15
	With brake	1.23	1.6	2.95
Max. radial load (N)[*4]		245	245	392
Max. axial load (N)[*4]		74	74	147
Brake operating voltage		24 V_{DC} ± 10%		
Brake power consumption (at 20°C (68°F)) [W]		7.6	7.6	8.5
Brake holding torque [N·m (Min)][*2]		1.3	1.3	3.2
Brake release time [ms (Max)]		20	20	30
Brake pull-in time [ms (Max)]		50	50	60
Derating rate (with oil seal) (%)		10	5	5
Insulation class		Class A (UL), Class B (CE)		
Insulation resistance		100 MΩ min. (at 500 V_{DC})		
Insulation strength		1.8 kV_{AC}, 1 sec		
Vibration grade		V15		
Ambient temperature		-20°C to +60°C (-4°F to +140°F)[*3]		
Storage temperature		-20°C to +80°C (-4°F to +176°F)		
Ambient and storage humidity		20 - 90% RH (non-condensing)		
Vibration capacity		2.5 G		
IP rating		IP67 (for models using waterproof connectors and shaft seals or oil seals)		
Approvals		CE		

Note:

1. The rated torque is the permissible continuous torque when the motor mounted with the heat sink of the following dimensions is operating in a temperature range of 0°C - 40°C (32°F - 104°F).
   F60 and F80: 250 mm x 250 mm x 6 mm
   Material: aluminum
2. The built-in motor brake is only for keeping the machine connected to the motor in a stopped state. Do not use it for deceleration or as a dynamic brake.
3. If the ambient temperature is over 40°C (104°F), refer to Section A.2.3 Power derating curves of the ECM-E3 motors.
4. Follow the load specification for the motor shaft during operation. The load types for the motor shaft are defined as follows.

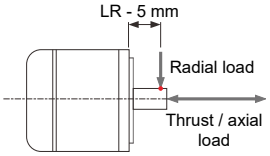

A

F130 motors (medium & high inertia)

ECM-		E3M-E□1310□□E	E3M-E□1315□□E	E3H-F□1308□□E	E3H-F□1313□□E
Rated power (kW)		1	1.5	0.85	1.3
Rated torque (N·m)[*1]		4.77	7.16	5.39	8.34
Max. torque (N·m)		14.3	21.48	16.17	25.02
Rated speed (rpm)		2000	2000	1500	1500
Max. speed (rpm)		3000	3000	4000	4000
Rated current (Arms)		5.96	8.17	6.65	7.70
Max. instantaneous current (Arms)		19.9	26.82	20.0	23.9
Change of rated power (kW/s)	No brake	29.21	45.69	23.4	38.6
	With brake	28.66	45.09	23.0	38.3
Rotor inertia ($\times 10^{-4}$ kg·m^2)	No brake	7.79	11.22	12.44	18.00
	With brake	7.94	11.37	12.62	18.14
Mechanical time constant (ms)	No brake	1.46	1.10	2.48	1.98
	With brake	1.49	1.12	2.52	1.99
Torque constant-KT (N·m/Arms)		0.80	0.88	0.811	1.08
Voltage constant-KE (mVrms/rpm)		29.30	31.69	29.8	38.8
Armature resistance (ohm)		0.419	0.260	0.460	0.440
Armature inductance (mH)		4	2.81	2.50	2.76
Electrical time constant (ms)		9.55	10.81	5.43	6.27
Weight (kg)	No brake	4.9	6.0	6.0	7.0
	With brake	6.3	7.4	7.5	8.5
Max. radial load (N)[*4]		490	686	490	686
Max. axial load (N)[*4]		98	343	98	343
Brake operating voltage		24 V_{DC} ± 10%			
Brake power consumption (at 20°C (68°F)) [W]		21.5	21.5	24	24
Brake holding torque [N·m (Min)][*2]		10	10	16	16
Brake release time [ms (Max)]		50	50	60	60
Brake pull-in time [ms (Max)]		110	110	120	120
Derating rate (with oil seal) (%)		5	5	5	5
Insulation class		Class A (UL), Class B (CE)		Class F (UL), Class F (CE)	
Insulation resistance		100 MΩ min. (at 500 V_{DC})			
Insulation strength		1.8 kV_{AC}, 1 sec			
Vibration grade		V15			
Ambient temperature		-20°C to +60°C (-4°F to +140°F)[*3]			
Storage temperature		-20°C to +80°C (-4°F to +176°F)			
Ambient and storage humidity		20 - 90% RH (non-condensing)			
Vibration capacity		2.5 G			
IP rating		IP67 (for models using shaft seals or oil seals)			
Approvals		CE			

Note:

1. The rated torque is the permissible continuous torque when the motor mounted with the heat sink of the following dimensions is operating in a temperature range of 0°C - 40°C (32°F - 104°F).
   F130: 400 mm x 400 mm x 20 mm
   Material: aluminum
2. The built-in motor brake is only for keeping the machine connected to the motor in a stopped state. Do not use it for deceleration or as a dynamic brake.
3. If the ambient temperature is over 40°C (104°F), refer to Section A.2.3 Power derating curves of the ECM-E3 motors.
4. Follow the load specification for the motor shaft during operation. The load types for the motor shaft are defined as follows.

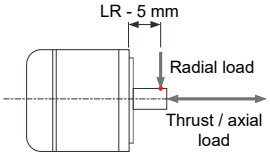

A

A.2.1.2 400V models

F80 and below motors (medium inertia)

ECM-		E3M-J□0807□□E
Rated power (kW)		0.75
Rated torque (N·m)[*1]		2.4
Max. torque (N·m)		8.4
Rated speed (rpm)		3000
Max. speed (rpm)		6000
Rated current (Arms)		2.15
Max. instantaneous current (Arms)		7.90
Change of rated power (kW/s)	No brake	53.83
	With brake	50.97
Rotor inertia ($\times 10^{-4}$ kg·m^2)	No brake	1.07
	With brake	1.13
Mechanical time constant (ms)	No brake	0.55
	With brake	0.58
Torque constant-KT (N·m/Arms)		1.12
Voltage constant-KE (mVrms/rpm)		40.34
Armature resistance (ohm)		2.20
Armature inductance (mH)		11.2
Electrical time constant (ms)		5.09
Weight (kg)	No brake	2.34
	With brake	3.15
Max. radial load (N)[*4]		392
Max. axial load (N)[*4]		147
Brake operating voltage		24 V_{DC} ± 10%
Brake power consumption (at 20°C (68°F)) [W]		8.5
Brake holding torque [N·m (Min)][*2]		3.2
Brake release time [ms (Max)]		40
Brake pull-in time [ms (Max)]		60
Derating rate (with oil seal) (%)		5
Insulation class		Class A (UL), Class B (CE)
Insulation resistance		100 MΩ min. (at 500 V_{DC})
Insulation strength		2.3 kV_{AC}, 1 sec
Vibration grade		V15
Ambient temperature		-20°C to +60°C (-4°F to +140°F)[*3]
Storage temperature		-20°C to +80°C (-4°F to +176°F)
Ambient and storage humidity		20 - 90% RH (non-condensing)
Vibration capacity		2.5 G
IP rating		IP67 (for models using waterproof connectors and shaft seals or oil seals)
Approvals		CE c UL US

Note:

1. The rated torque is the permissible continuous torque when the motor mounted with the heat sink of the following dimensions is operating in a temperature range of 0°C - 40°C (32°F - 104°F).
   F80: 250 mm x 250 mm x 6 mm
   Material: aluminum
2. The built-in motor brake is only for keeping the machine connected to the motor in a stopped state. Do not use it for deceleration or as a dynamic brake.
3. If the ambient temperature is over 40°C (104°F), refer to Section A.2.3 Power derating curves of the ECM-E3 motors.
4. Follow the load specification for the motor shaft during operation. The load types for the motor shaft are defined as follows.

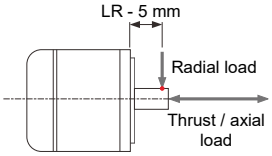

A

F100 motors (medium inertia)

ECM-		E3M-J□1010□□E	E3M-J□1015□□E	E3M-J□1020□□E
Rated power (kW)		1	1.5	2
Rated torque (N·m)[*1]		3.18	4.77	6.37
Max. torque (N·m)		9.54	14.31	19.11
Rated speed (rpm)		3000		
Max. speed (rpm)		6000		
Rated current (Arms)		3.03	3.73	5.00
Max. instantaneous current (Arms)		9.21	11.4	15.3
Change of rated power (kW/s)	No brake	36.4	61.7	86.7
	With brake	33.0	57.3	82.0
Rotor inertia ($\times 10^{-4}$ kg·m^2)	No brake	2.78	3.69	4.68
	With brake	3.06	3.97	4.95
Mechanical time constant (ms)	No brake	0.737	0.546	0.528
	With brake	0.811	0.587	0.559
Torque constant-KT (N·m/Arms)		1.05	1.28	1.27
Voltage constant-KE (mVrms/rpm)		39.5	47.8	47.2
Armature resistance (ohm)		1.05	0.864	0.646
Armature inductance (mH)		7.50	6.63	4.89
Electrical time constant (ms)		7.14	7.67	7.57
Weight (kg)	No brake	3.56	4.37	5.09
	With brake	4.88	5.68	6.505
Max. radial load (N)[*4]		490	490	490
Max. axial load (N)[*4]		196	196	196
Brake operating voltage		24 V_{DC} ± 10%		
Brake power consumption (at 20°C (68°F)) [W]		17.6	17.6	17.6
Brake holding torque [N·m (Min)][*2]		9.5	9.5	9.5
Brake release time [ms (Max)]		50	50	50
Brake pull-in time [ms (Max)]		110	110	110
Derating rate (with oil seal) (%)		5	5	5
Insulation class		Class A (UL), Class B (CE)		
Insulation resistance		100 MΩ min. (at 500 V_{DC})		
Insulation strength		2.3 kV_{AC}, 1 sec		
Vibration grade		V15		
Ambient temperature		-20°C to +60°C (-4°F to +140°F)[*3]		
Storage temperature		-20°C to +80°C (-4°F to +176°F)		
Ambient and storage humidity		20 - 90% RH (non-condensing)		
Vibration capacity		2.5 G		
IP rating		IP67 (for models using shaft seals or oil seals)		
Approvals				

Note:

1. The rated torque is the permissible continuous torque when the motor mounted with the heat sink of the following dimensions is operating in a temperature range of 0°C - 40°C (32°F - 104°F).
   F100: 300 mm x 300 mm x 12 mm
   Material: aluminum
2. The built-in motor brake is only for keeping the machine connected to the motor in a stopped state. Do not use it for deceleration or as a dynamic brake.
3. If the ambient temperature is over 40°C (104°F), refer to Section A.2.3 Power derating curves of the ECM-E3 motors.
4. Follow the load specification for the motor shaft during operation. The load types for the motor shaft are defined as follows.

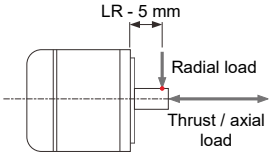

A

F130 motors (medium & high inertia)

ECM-		E3M-K□1310□□E	E3M-K□1315□□E	E3M-K□1320□□E	E3H-L□1308□□E	E3H-L□1313□□E	E3H-L□1318□□E
Rated power (kW)		1.0	1.5	2.0	0.85	1.3	1.8
Rated torque (N·m)[*1]		4.77	7.16	9.55	5.39	8.34	11.5
Max. torque (N·m)		14.3	21.48	28.65	16.17	25.02	34.5
Rated speed (rpm)		2000			1500		
Max. speed (rpm)		3000			4000		
Rated current (Arms)		3.00	4.09	5.30	3.35	3.85	5.75
Max. instantaneous current (Arms)		9.95	13.37	17.1	10.0	12.0	18.1
Change of rated power (kW/s)	No brake	29.21	45.69	62.25	23.4	38.6	58.5
	With brake	28.66	45.09	61.62	23.0	38.3	58.0
Rotor inertia ($\times 10^{-4}$ kg·m^2)	No brake	7.79	11.22	14.65	12.44	18.00	22.60
	With brake	7.94	11.37	14.80	12.62	18.14	22.80
Mechanical time constant (ms)	No brake	1.47	1.10	1.03	2.50	1.97	1.69
	With brake	1.50	1.12	1.04	2.54	1.99	1.71
Torque constant-KT (N·m/Arms)		1.59	1.75	1.80	1.61	2.17	2.00
Voltage constant-KE (mVrms/rpm)		58.60	63.38	65.40	59.5	77.6	70.7
Armature resistance (ohm)		1.68	1.04	0.792	1.84	1.76	1.01
Armature inductance (mH)		16.0	11.2	8.72	10.0	11.0	6.80
Electrical time constant (ms)		9.52	10.8	11.0	5.43	6.25	6.73
Weight (kg)	No brake	4.9	6.0	7.0	6.0	7.0	8.0
	With brake	6.3	7.4	8.5	7.5	8.5	9.5
Max. radial load (N)[*4]		490	686	980	490	686	980
Max. axial load (N)[*4]		98	343	392	98	343	392
Brake operating voltage		24 V_{DC} ± 10%					
Brake power consumption (at 20°C (68°F)) [W]		21.5	21.5	21.5	24	24	24
Brake holding torque [N·m (Min)][*2]		10	10	10	16	16	16
Brake release time [ms (Max)]		50	50	50	60	60	60
Brake pull-in time [ms (Max)]		110	110	110	120	120	120
Derating rate (with oil seal) (%)		5	5	5	5	5	5
Insulation class		Class A (UL), Class B (CE)			Class F (UL), Class F (CE)		
Insulation resistance		100 MΩ min. (at 500 V_{DC})					
Insulation strength		2.3 kV_{AC}, 1 sec					
Vibration grade		V15					
Ambient temperature		-20°C to +60°C (-4°F to +140°F)[*3]					
Storage temperature		-20°C to +80°C (-4°F to +176°F)					
Ambient and storage humidity		20 - 90% RH (non-condensing)					
Vibration capacity		2.5 G					
IP rating		IP67 (for models using shaft seals or oil seals)					
Approvals							

Note:

1. The rated torque is the permissible continuous torque when the motor mounted with the heat sink of the following dimensions is operating in a temperature range of 0°C - 40°C (32°F - 104°F).
   F130: 400 mm x 400 mm x 20 mm
   Material: aluminum
2. The built-in motor brake is only for keeping the machine connected to the motor in a stopped state. Do not use it for deceleration or as a dynamic brake.
3. If the ambient temperature is over 40°C (104°F), refer to Section A.2.3 Power derating curves of the ECM-E3 motors.
4. Follow the load specification for the motor shaft during operation. The load types for the motor shaft are defined as follows.

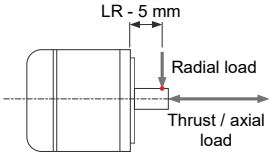

A

F180 motors (medium inertia)

ECM-		E3M-K□1820□□E	E3M-L□1830□□E	E3M-L□1845□□E	E3M-L□1855□□E	E3M-L□1875□□E
Rated power (kW)		2	3	4.5	5.5	7.5
Rated torque (N·m)[*1]		9.55	19.1	28.65	35.01	47.75
Max. torque (N·m)		28.65	57.29	71.6	105	119
Rated speed (rpm)		2000	1500	1500		
Max. speed (rpm)		3000	3000	4000		
Rated current (Arms)		5.7	9.1	13.3	15.3	22.1
Max. instantaneous current (Arms)		18.1	29.45	35.35	49.29	56.68
Change of rated power (kW/s)	No brake	31.33	68.02	121	124	169
	With brake	30.02	66.45	119	122	167
Rotor inertia ($\times 10^{-4}$ kg·m^2)	No brake	29.11	53.63	67.73	98.88	134.95
	With brake	30.38	54.9	69.15	100.1	136.24
Mechanical time constant (ms)	No brake	1.83	1.21	1.07	1.01	1.01
	With brake	1.91	1.24	1.09	1.02	1.02
Torque constant-KT (N·m/Arms)		1.68	2.10	2.15	2.29	2.16
Voltage constant-KE (mVrms/rpm)		63.2	75.8	78.8	81.8	77.4
Armature resistance (ohm)		0.636	0.344	0.255	0.182	0.120
Armature inductance (mH)		9.36	6.08	4.68	3.48	2.27
Electrical time constant (ms)		14.72	17.67	18.4	19.1	18.9
Weight (kg)	No brake	10	13.9	16.5	21.2	27.2
	With brake	13.7	17.6	20.2	24.9	30.9
Max. radial load (N)[*4]		1470	1470	1470	1764	1764
Max. axial load (N)[*4]		490	490	490	588	588
Brake operating voltage		24 V_{DC} ± 10%				
Brake power consumption (at 20°C (68°F)) [W]		31	31	31	31	31
Brake holding torque [N·m (Min)][*2]		25	25	55	55	55
Brake release time [ms (Max)]		30	30	50	50	50
Brake pull-in time [ms (Max)]		120	120	150	150	150
Derating rate (with oil seal) (%)		5	5	0	0	0
Insulation class		Class A (UL), Class B (CE)		Class F (UL), Class F (CE)		
Insulation resistance		100 MΩ min. (at 500 V_{DC})				
Insulation strength		2.3 kV_{AC}, 1 sec				
Vibration grade		V15				
Ambient temperature		-20°C to +60°C (-4°F to +140°F)[*3]				
Storage temperature		-20°C to +80°C (-4°F to +176°F)				
Ambient and storage humidity		20 - 90% RH (non-condensing)				
Vibration capacity		2.5 G				
IP rating		IP67 (for models using shaft seals or oil seals)				
Approvals		CE cULus				

Note:

1. The rated torque is the permissible continuous torque when the motor mounted with the heat sink of the following dimensions is operating in a temperature range of 0°C - 40°C (32°F - 104°F).
   F180: 550 mm x 550 mm x 30 mm
   Material: aluminum
2. The built-in motor brake is only for keeping the machine connected to the motor in a stopped state. Do not use it for deceleration or as a dynamic brake.
3. If the ambient temperature is over 40°C (104°F), refer to Section A.2.3 Power derating curves of the ECM-E3 motors.
4. Follow the load specification for the motor shaft during operation. The load types for the motor shaft are defined as follows.

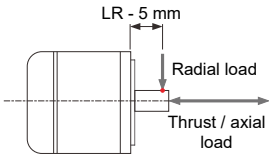

A.2.2 Torque features (T-N curves) of the ECM-E3 motors

A.2.2.1 220V models

F80 and below motors

A

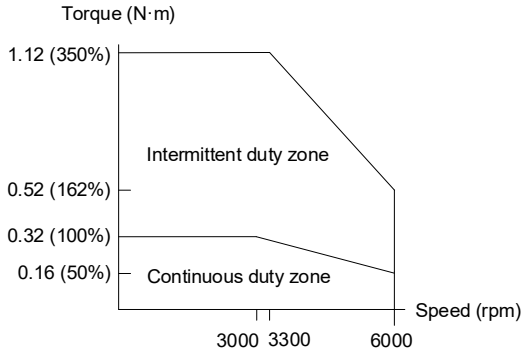

ECM-E3L-C□0401□□E

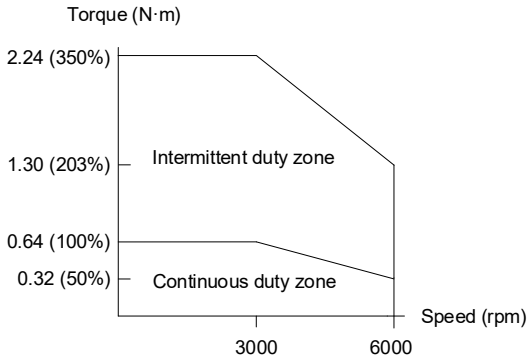

ECM-E3M-C□0602□□E

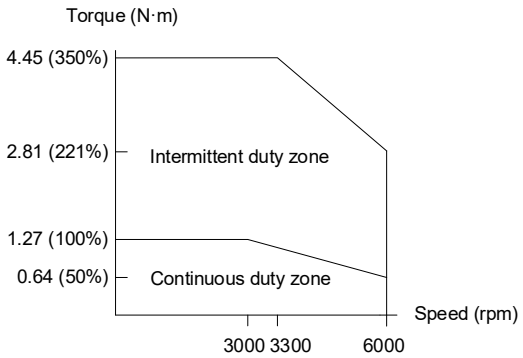

ECM-E3M-C□0604□□E

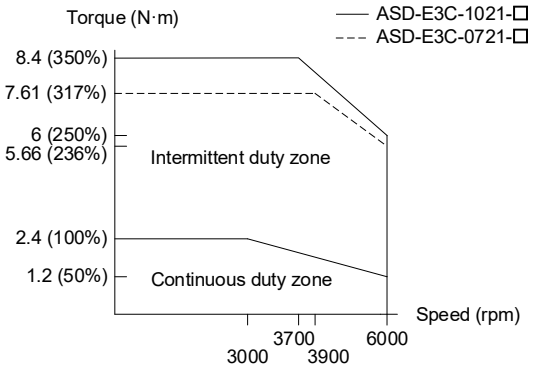

ECM-E3M-C□0807□□E

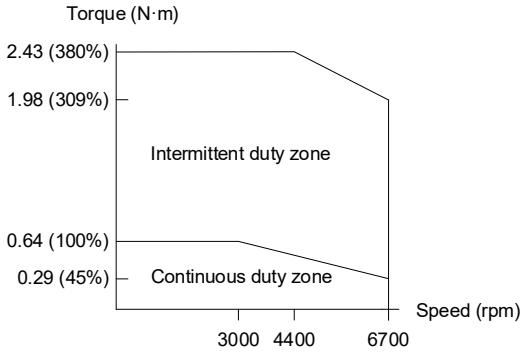

ECM-E3H-C□0602□□E

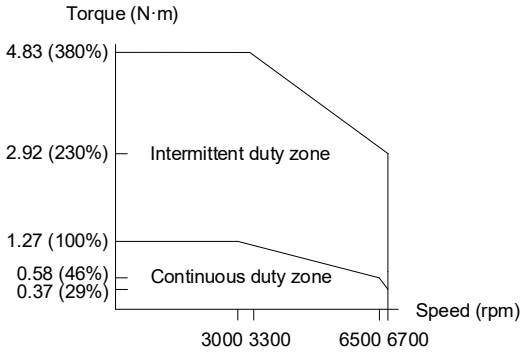

ECM-E3H-C□0604□□E

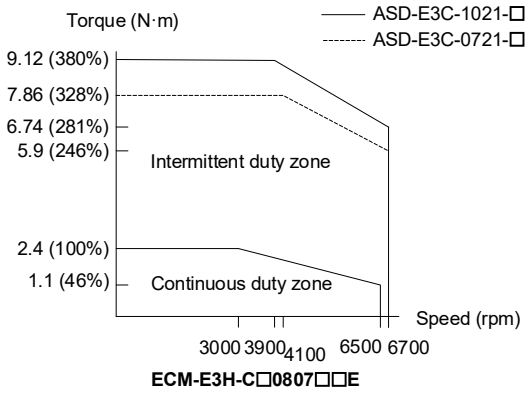

ECM-E3H-C□0807□□E

F130 motors

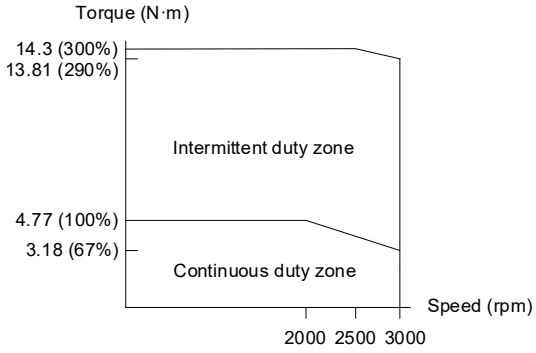

ECM-E3M-E□1310□□E

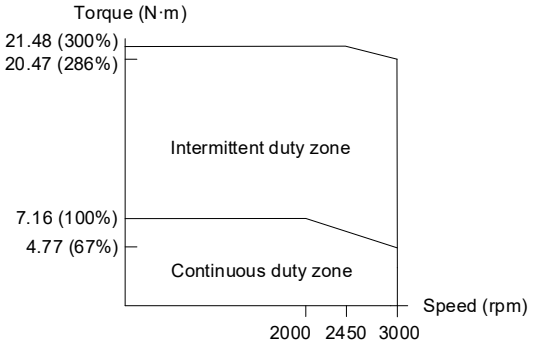

ECM-E3M-E□1315□□E

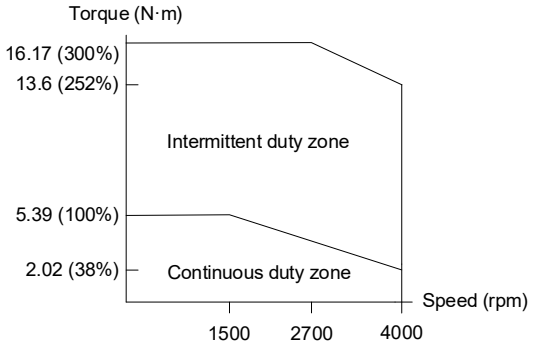

ECM-E3H-F□1308□□E

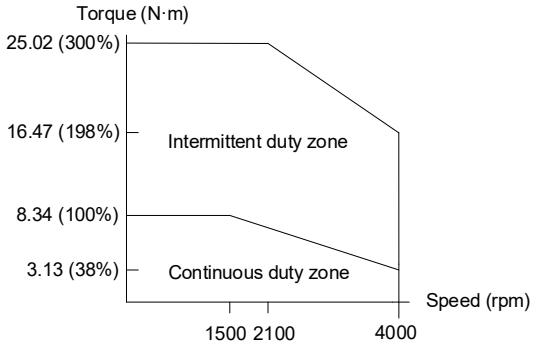

ECM-E3H-F□1313□□E

A

A.2.2.2 400V models

F80 and below motors

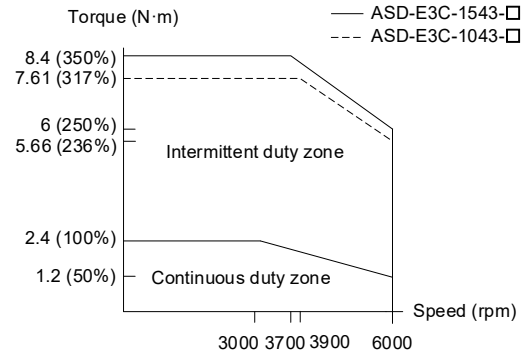

ECM-E3M-J□0807□□E

F100 motors

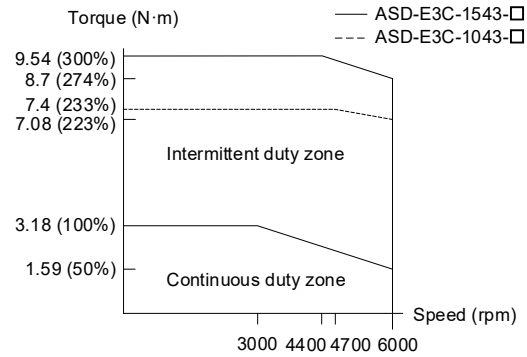

ECM-E3M-J□1010□□E

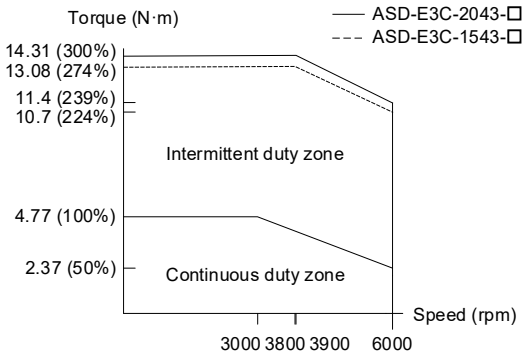

ECM-E3M-J□1015□□E

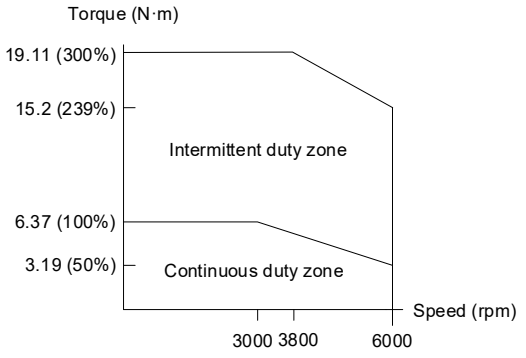

ECM-E3M-J□1020□□E

A

F130 motors

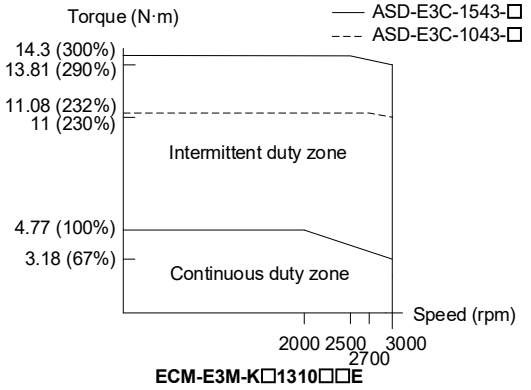

ECM-E3M-K□1310□□E

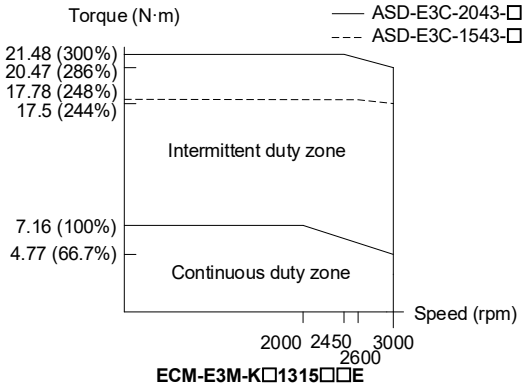

ECM-E3M-K□1315□□E

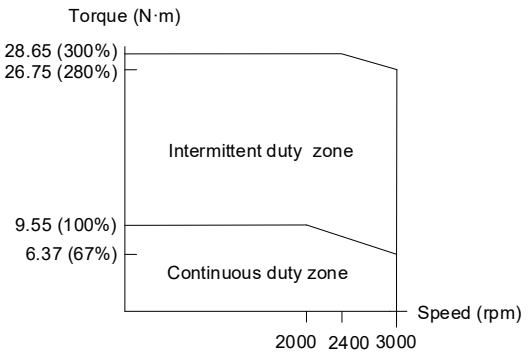

ECM-E3M-K□1320□□E

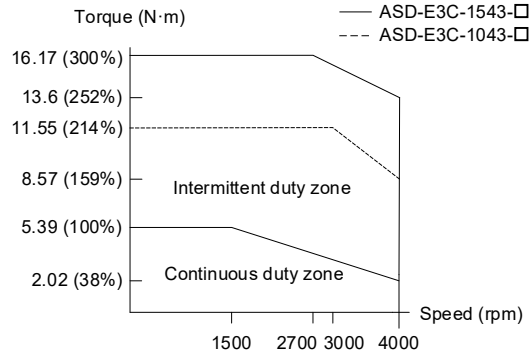

ECM-E3H-L□1308□□E

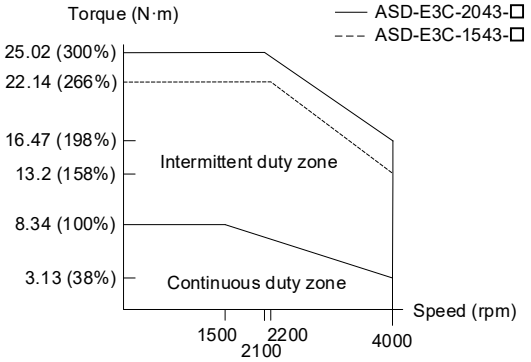

ECM-E3H-L□1313□□E

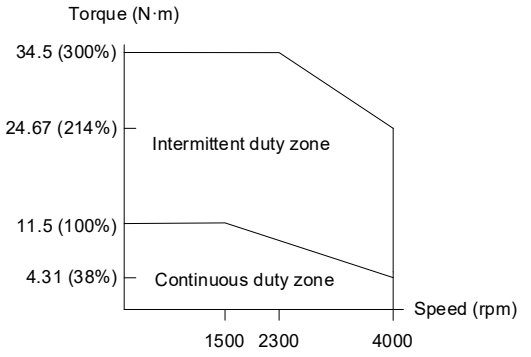

ECM-E3H-L□1318□□E

F180 motors

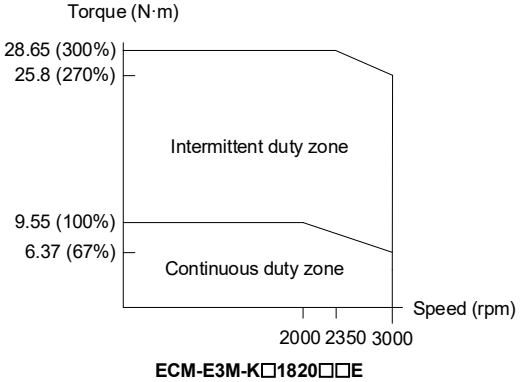

ECM-E3M-K□1820□□E

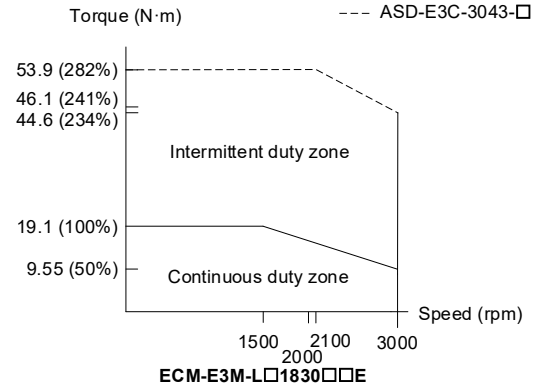

ECM-E3M-L□1830□□E

A

A.2.3 Power derating curves of the ECM-E3 motors

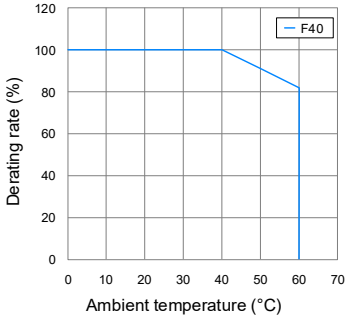

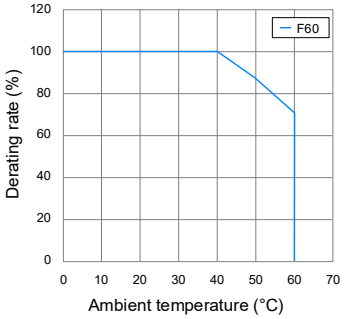

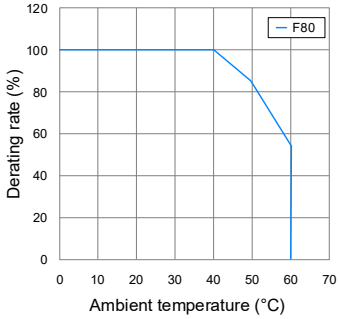

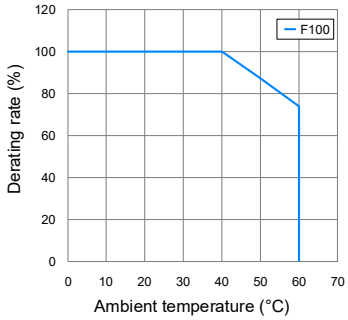

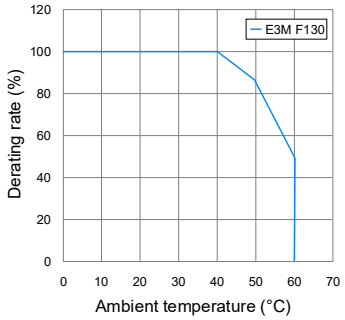

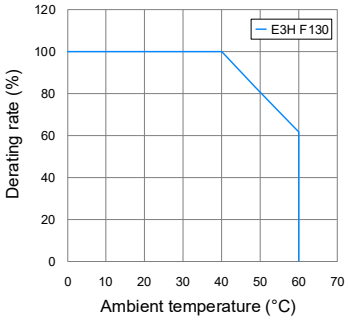

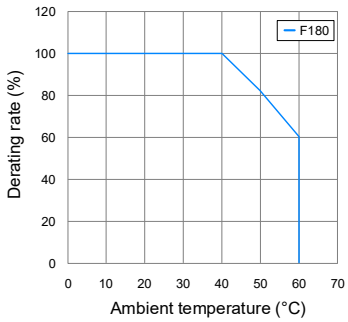

Note: the preceding specifications are applicable to 220V and 400V models.

A.2.4 Overload features

Definition of overload protection

The overload protection prevents the motor from overheating.

A

Causes of overload

1. The motor's operating torque exceeds the rated range and the operation exceeds the allowable operating time.
2. The inertia ratio is too high and the motor frequently accelerates and decelerates.
3. Incorrect wiring of the power and encoder cables.
4. Incorrect servo gain setting causes motor resonance.
5. A motor with a built-in brake operates without the brake released.

Graph of load ratio and operating time

220V models: low inertia (ECM-E3L-C motors), medium inertia (ECM-E3M-C motors), high inertia (ECM-E3H-C motors)

400V models: medium inertia (ECM-E3M-J motors)

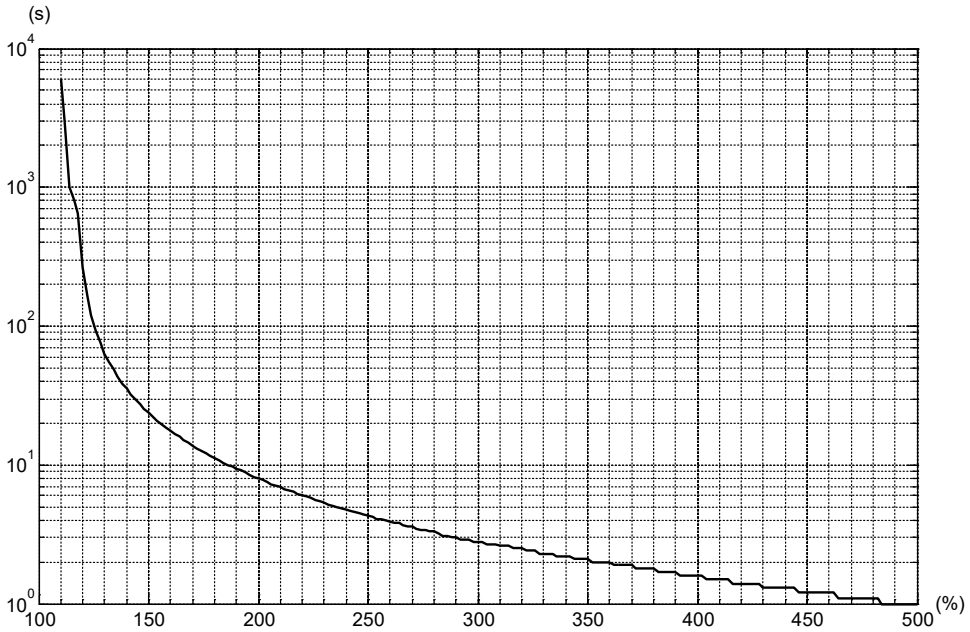

Load ratio	120%	140%	160%	180%	200%	220%	240%
Operating time	263.8 s	35.2 s	17.6 s	11.2 s	8 s	6.1 s	4.8 s
Load ratio	260%	280%	300%	350%	400%	450%	500%
Operating time	3.9 s	3.3 s	2.8 s	2.1 s	1.6 s	1.2 s	1 s

220V models: medium inertia (ECM-E3M-E / F motors)

400V models: medium inertia (ECM-E3M-K / L motors), high inertia (ECM-E3H-L motors)

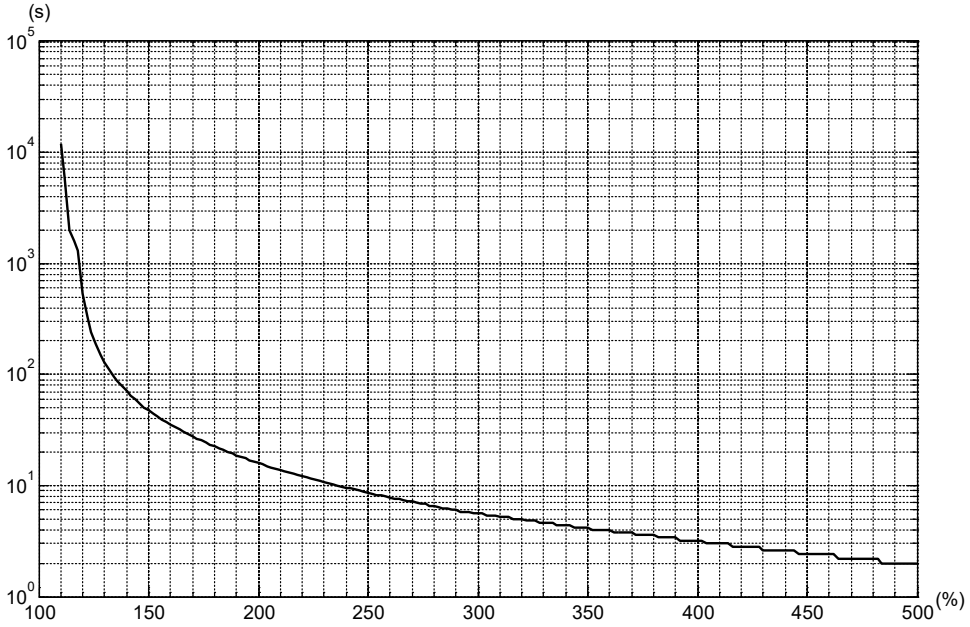

Load ratio	120%	140%	160%	180%	200%	220%	240%
Operating time	527.6 s	70.4 s	35.2 s	22.4 s	16 s	12.2 s	9.6 s
Load ratio	260%	280%	300%	350%	400%	450%	500%
Operating time	7.8 s	6.6 s	5.6 s	4.2 s	3.2 s	2.4 s	2 s

A.2.5 Dimensions of ECM-E3 series servo motor

A.2.5.1 220V models

F80 and below motors with cables (low & medium inertia)

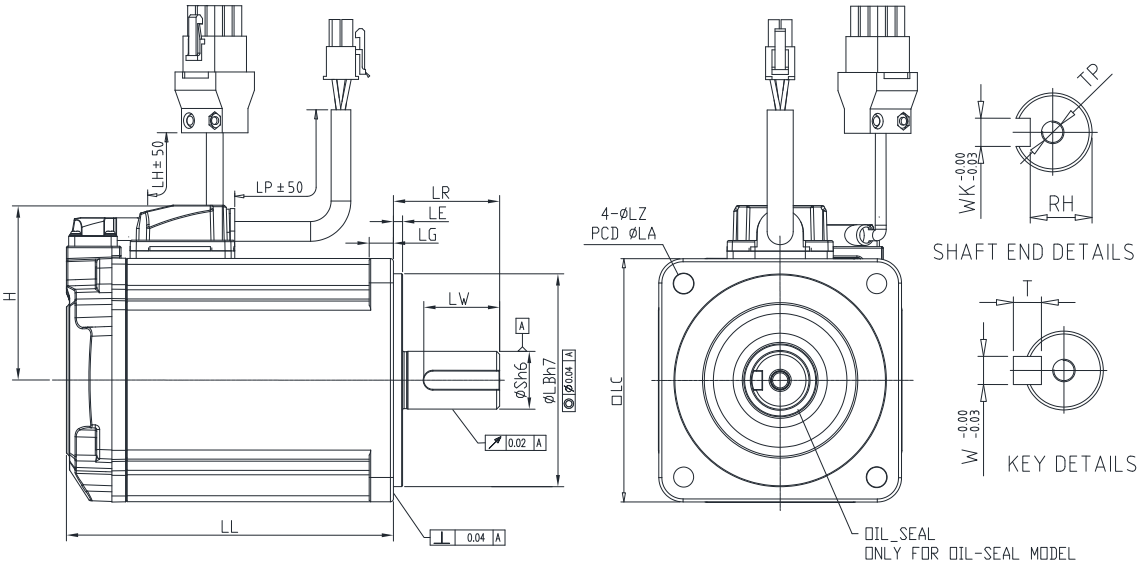

Unit: mm

ECM-	E3L-C□0401□□E	E3M-C□0602□□E	E3M-C□0604□□E	E3M-C□0807□□E
LC	40	60	60	80
LZ	4.5	5.5	5.5	6.6
LA	46	70	70	90
S	$8(^{+0}_{-0.009})$	$14(^{+0}_{-0.011})$	$14(^{+0}_{-0.011})$	$19(^{+0}_{-0.013})$
LB	$30(^{+0}_{-0.021})$	$50(^{+0}_{-0.025})$	$50(^{+0}_{-0.025})$	$70(^{+0}_{-0.030})$
LL (no brake)	77.6	72.5	91	105.2
LL (with brake)	111.7	109.4	127.9	144.8
LH	300	300	300	300
LP	300	300	300	300
H	36.5	47.5	47.5	57.5
LR	25	30	30	35
LE	2.5	3	3	3
LG	5	7.5	7.5	8
LW	16	20	20	25
RH	6.2	11	11	15.5
WK	3	5	5	6
W	3	5	5	6
T	3	5	5	6
TP	M3 Depth 8	M4 Depth 15	M4 Depth 15	M6 Depth 20

A

F80 and below motors with bulkhead receptacles (low & medium & high inertia)

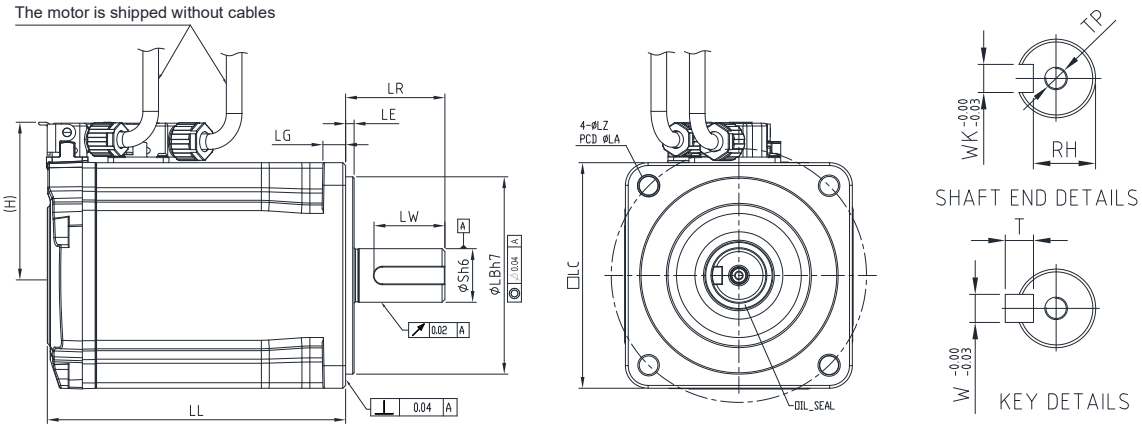

Unit: mm

ECM-	E3L-C□0401□BE	E3M-C□0602□BE	E3M-C□0604□BE	E3M-C□0807□BE	E3H-C□0602□BE	E3H-C□0604□BE	E3H-C□0807□BE
LC	40	60	60	80	60	60	80
LZ	4.5	5.5	5.5	6.6	5.5	5.5	6.6
LA	46	70	70	90	70	70	90
S	$8(^{+0}_{-0.009})$	$14(^{+0}_{-0.011})$	$14(^{+0}_{-0.011})$	$19(^{+0}_{-0.013})$	$14(^{+0}_{-0.011})$	$14(^{+0}_{-0.011})$	$19(^{+0}_{-0.013})$
LB	$30(^{+0}_{-0.021})$	$50(^{+0}_{-0.025})$	$50(^{+0}_{-0.025})$	$70(^{+0}_{-0.030})$	$50(^{+0}_{-0.025})$	$50(^{+0}_{-0.025})$	$70(^{+0}_{-0.030})$
LL (no brake)	76.2	72.5	91	105.2	69.6	87.45	95.4
LL (with brake)	107.7	104.4	122.9	140.8	101.5	119.35	131
H	34	44	44	54	44	44	54
LR	25	30	30	35	30	30	35
LE	2.5	3	3	3	3	3	3
LG	5	7.5	7.5	8	7.5	7.5	8
LW	16	20	20	25	20	20	25
RH	6.2	11	11	15.5	11	11	15.5
WK	3	5	5	6	5	5	6
W	3	5	5	6	5	5	6
T	3	5	5	6	5	5	6
TP	M3 Depth 8	M4 Depth 15	M4 Depth 15	M6 Depth 20	M4 Depth 15	M4 Depth 15	M6 Depth 20

A

F130 motors (medium & high inertia)

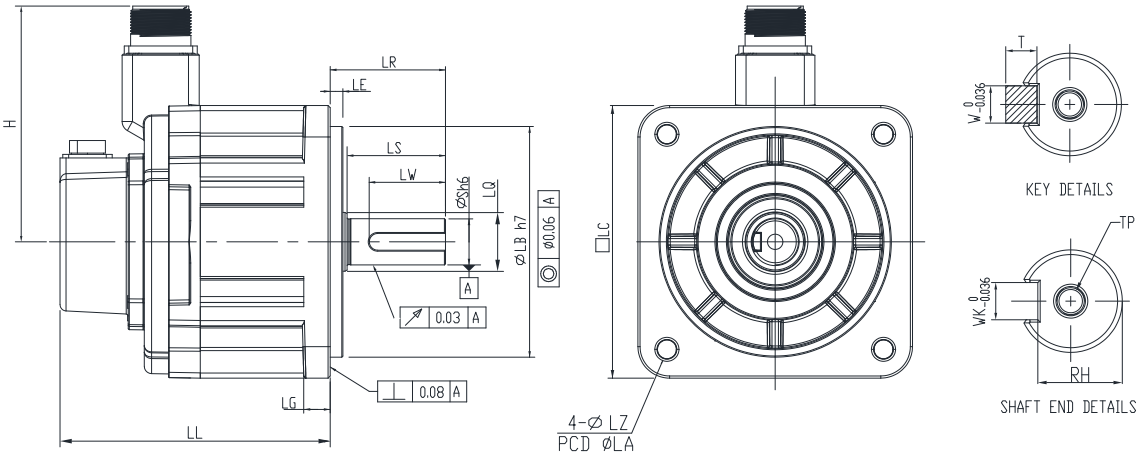

Unit: mm

ECM-	E3M-E□1310□□E	E3M-E□1315□□E	E3H-F□1308□□E	E3H-F□1313□□E
LC	130	130	130	130
LZ	9	9	9	9
LA	145	145	145	145
S	$22(^{+0}_{-0.013})$	$22(^{+0}_{-0.013})$	$22(^{+0}_{-0.013})$	$22(^{+0}_{-0.013})$
LB	$110(^{+0}_{-0.035})$	$110(^{+0}_{-0.035})$	$110(^{+0}_{-0.035})$	$110(^{+0}_{-0.035})$
LL (no brake)	127.9	139.9	127.9	139.9
LL (with brake)	168.5	180.5	168.5	180.5
H	115	115	115	115
LS	47	47	47	47
LR	55	55	55	55
LQ	28	28	28	28
LE	6	6	6	6
LG	12.5	12.5	12.5	12.5
LW	36	36	36	36
RH	18	18	18	18
WK	8	8	8	8
W	8	8	8	8
T	7	7	7	7
TP	M6 Depth 12	M6 Depth 12	M6 Depth 12	M6 Depth 12

A.2.5.2 400V models

F80 and below motors with cables (medium inertia)

A

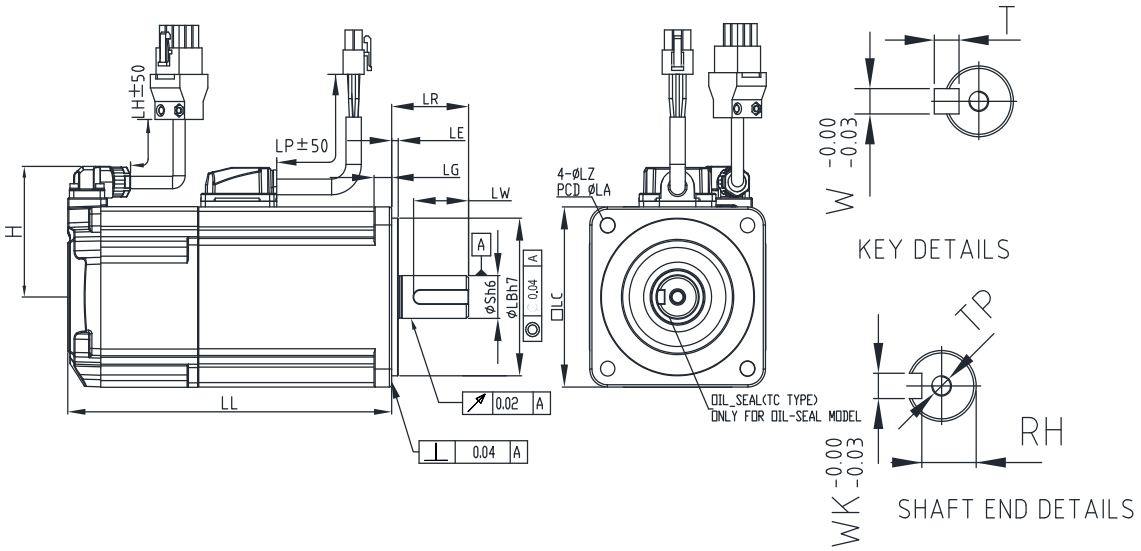

Unit: mm

ECM-	E3M-J□0807□□E
LC	80
LZ	6.6
LA	90
S	$19(^{+0}_{-0.013})$
LB	$70(^{+0}_{-0.030})$
LL (no brake)	105.2
LL (with brake)	144.8
LH	300
LP	300
H	58.5
LR	35
LE	3
LG	8
LW	25
RH	15.5
WK	6
W	6
T	6
TP	M6 Depth 20

A

F100 models (medium inertia)

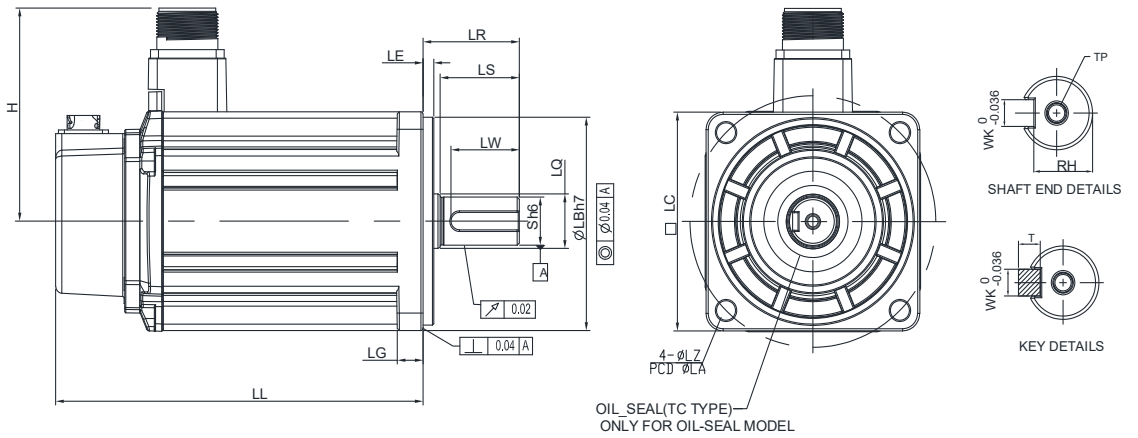

Unit: mm

ECM-	E3M-J□1010□□E	E3M-J□1015□□E	E3M-J□1020□□E
LC	100	100	100
LZ	9	9	9
LA	115	115	115
S	$22(^{+0}_{-0.013})$	$22(^{+0}_{-0.013})$	$22(^{+0}_{-0.013})$
LB	$95(^{+0}_{-0.030})$	$95(^{+0}_{-0.030})$	$95(^{+0}_{-0.030})$
LL (no brake)	141.8	156.8	171.8
LL (with brake)	179.9	194.9	209.9
H	97.4	97.4	97.4
LS	37	37	37
LR	45	45	45
LQ	25	25	25
LE	5	5	5
LG	12	12	12
LW	32	32	32
RH	18	18	18
WK	8	8	8
W	8	8	8
T	7	7	7
TP	M6 Depth 12	M6 Depth 12	M6 Depth 12

A

F130 motors (medium & high inertia)

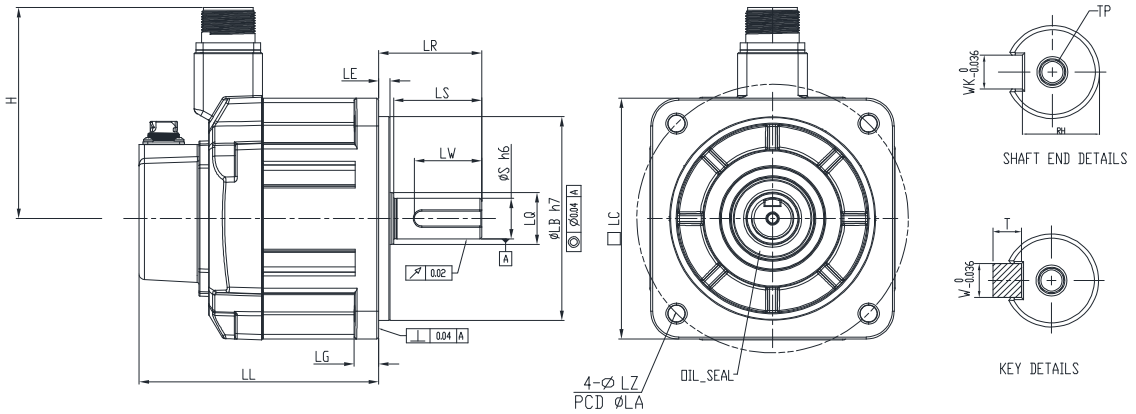

Unit: mm

ECM-	E3M-K□1310□□E	E3M-K□1315□□E	E3M-K□1320□□E	E3H-L□1308□□E	E3H-L□1313□□E	E3H-L□1318□□E
LC	130	130	130	130	130	130
LZ	9	9	9	9	9	9
LA	145	145	145	145	145	145
S	$22(^{+0}_{-0.013})$	$22(^{+0}_{-0.013})$	$22(^{+0}_{-0.013})$	$22(^{+0}_{-0.013})$	$22(^{+0}_{-0.013})$	$22(^{+0}_{-0.013})$
LB	$110(^{+0}_{-0.035})$	$110(^{+0}_{-0.035})$	$110(^{+0}_{-0.035})$	$110(^{+0}_{-0.035})$	$110(^{+0}_{-0.035})$	$110(^{+0}_{-0.035})$
LL (no brake)	127.9	139.9	151.9	127.9	139.9	151.9
LL (with brake)	168.5	180.5	192.5	168.5	180.5	192.5
H	115	115	115	115	115	115
LS	47	47	47	47	47	47
LR	55	55	55	55	55	55
LQ	28	28	28	28	28	28
LE	6	6	6	6	6	6
LG	12.5	12.5	12.5	12.5	12.5	12.5
LW	36	36	36	36	36	36
RH	18	18	18	18	18	18
WK	8	8	8	8	8	8
W	8	8	8	8	8	8
T	7	7	7	7	7	7
TP	M6 Depth 12	M6 Depth 12	M6 Depth 12	M6 Depth 12	M6 Depth 12	M6 Depth 12

A

F180 motors (medium inertia)

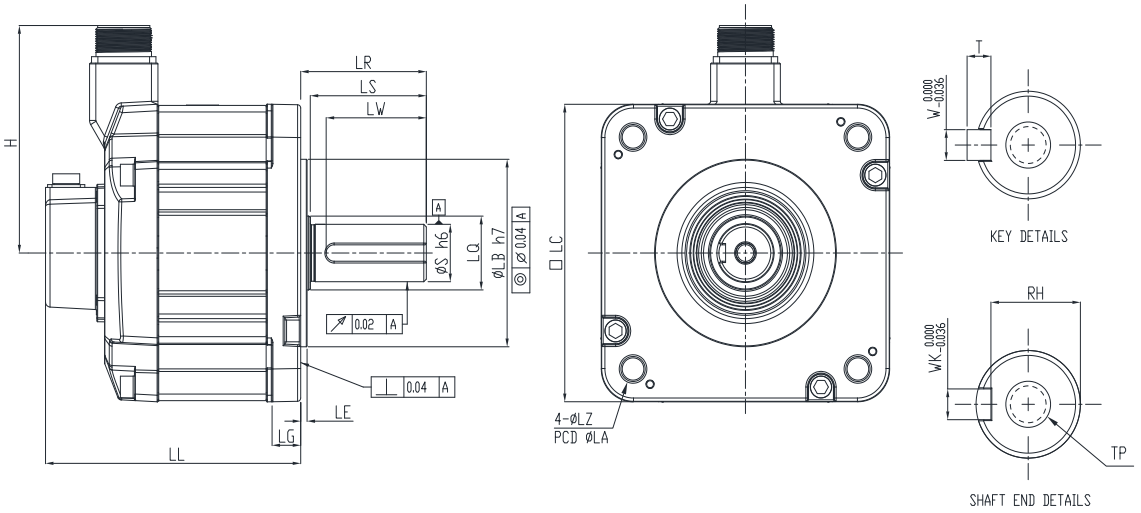

Unit: mm

ECM-	E3M-K□1820□□E	E3M-L□1830□□E
LC	180	180
LZ	13.5	13.5
LA	200	200
S	$35(^{+0}_{-0.016})$	$35(^{+0}_{-0.016})$
LB	$114.3(^{+0}_{-0.035})$	$114.3(^{+0}_{-0.035})$
LL (no brake)	137.5	160.5
LL (with brake)	189.5	212.5
H	139	139
LS	73	73
LR	79	79
LQ	45	45
LE	4	4
LG	18	18
LW	63	63
RH	30	30
WK	10	10
W	10	10
T	8	8
TP	M12 Depth 25	M12 Depth 25

(This page is intentionally left blank.)

A

Accessories Appendix B

This chapter is a guide to select the accessories.

B.1 Power connectors ····· B-2
B.2 Power cables ····· B-3
B.2.1 F40 - F80 motors ····· B-3
B.2.2 F100 - F130 motors ····· B-4
B.2.3 F180 motors ····· B-4
B.2.4 Brake cables for F100 - F180 motors ····· B-4
B.3 Power adapter cables and counterpart connector (for motors with bulkhead receptacles) ····· B-5
B.3.1 F40 - F80 motors ····· B-6
B.4 Encoder connectors ····· B-7
B.5 Encoder cables ····· B-8
B.5.1 F40 - F80 motors ····· B-8
B.5.2 F100 - F180 motors ····· B-9
B.6 Encoder adapter cables and counterpart connector (for motors with bulkhead receptacles) ····· B-10
B.6.1 F40 - F80 motors ····· B-11
B.7 Battery boxes ····· B-12
B.8 CN1 I/O connector ····· B-13
B.9 CN2 connector ····· B-13
B.10 CN3 Modbus communication cable ····· B-13
B.11 E3C–B2 adapter cable ····· B-13
B.12 Selecting brake and encoder connectors (or cables) for F100 - F180 motors ····· B-14

B

B.1 Power connectors

Motor series	Frame size	Applicable model	Connector				Model number	Illustration
			Type	UVW	Brake	IP rating		
ECM-E3	F40 - F80	220V 400V	Standard	●	-	IP20	ACS3-CAPW1000	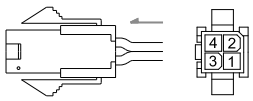
		220V 400V	Standard	●	●	IP20	ACS3-CAPW2000	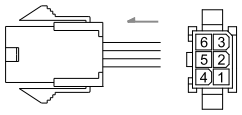
		220V 400V	Bulkhead - cable exit direction towards motor shaft	●	●	IP67	ACS3-AFPWSS00	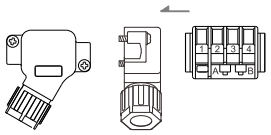
		220V 400V	Bulkhead - cable exit direction towards encoder	●	●	IP67	ACS3-ABPWSS00	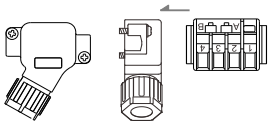
	F100 - F130	220V 400V	Military - straight 3106A-18-10S	●	-	IP67	ACS3-CAPWA000	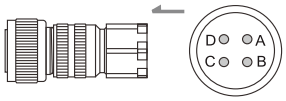
		220V 400V	Military - right angle 3108A-18-10S	●	-	IP67	ACS3-CRPWA000	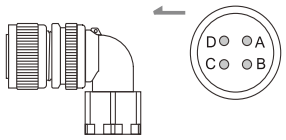
	F180	220V 400V	Military - straight 3106A-22-22S	●	-	IP67	ACS3-CAPWC000	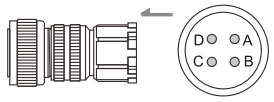
		220V 400V	Military - right angle 3108A-22-22S	●	-	IP67	ACS3-CRPWC000	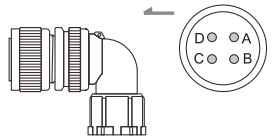
	F100 - F180	220V 400V	Military - straight CMV1-SP2S [bayonet]	-	●	IP67	ACS3-CABRA000	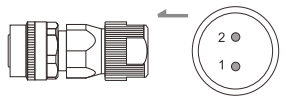
		220V 400V	Military - straight [threaded, M17.5]	-	●	IP67	ACS3-CABRM000	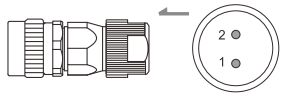
		220V 400V	Military - right angle CMV1-AP2S [bayonet]	-	●	IP67	ACS3-CRBRA000	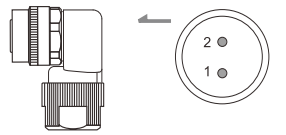
		220V 400V	Military - right angle [threaded, M17.5]	-	●	IP67	ACS3-CRBRM000	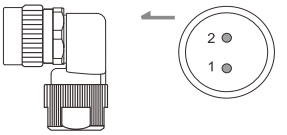

Note: motors with bayonet receptacles are not compatible with threaded military connectors. See Section B.12 for details.

B.2 Power cables

B.2.1 F40 - F80 motors

Motor series	Applicable model	Connector type	Wire spec. AWG (mm²) UVW	Wire spec. AWG (mm²) Brake	Length (L) mm (inch)	Model number Standard	Model number Flexible	Illustration
ECM-E3	220V no brake	Standard	18 (0.8)	-	3000 ± 50 (118 ± 2)	ACS3-CAPW1103	ACS3-CAPF1103	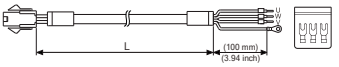
					5000 ± 50 (197 ± 2)	ACS3-CAPW1105	ACS3-CAPF1105	
					10000 ± 100 (394 ± 4)	ACS3-CAPW1110	ACS3-CAPF1110	
					20000 ± 100 (787 ± 4)	ACS3-CAPW1120	ACS3-CAPF1120	
	220V 400V with brake	Standard	18 (0.8)	22 (0.3)	3000 ± 50 (118 ± 2)	ACS3-CAPW2103	ACS3-CAPF2103	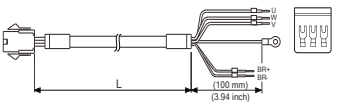
					5000 ± 50 (197 ± 2)	ACS3-CAPW2105	ACS3-CAPF2105	
					10000 ± 100 (394 ± 4)	ACS3-CAPW2110	ACS3-CAPF2110	
					20000 ± 100 (787 ± 4)	ACS3-CAPW2120	ACS3-CAPF2120	
	400V no brake	Standard	18 (0.8)	-	3000 ± 50 (118 ± 2)	ACS3-CAPW3103	ACS3-CAPF3103	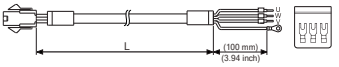
					5000 ± 50 (197 ± 2)	ACS3-CAPW3105	ACS3-CAPF3105	
					10000 ± 100 (394 ± 4)	ACS3-CAPW3110	ACS3-CAPF3110	
					20000 ± 100 (787 ± 4)	ACS3-CAPW3120	ACS3-CAPF3120	
	220V no brake	Bulkhead - cable exit direction towards motor shaft	20 (0.5)	-	3000 ± 50 (118 ± 2)	ACS3-AFPWSR03	ACS3-AFPRSR03	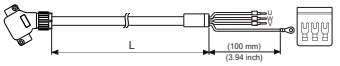
					5000 ± 50 (197 ± 2)	ACS3-AFPWSR05	ACS3-AFPRSR05	
					10000 ± 100 (394 ± 4)	ACS3-AFPWSR10	ACS3-AFPRSR10	
					20000 ± 100 (787 ± 4)	ACS3-AFPWSR20	ACS3-AFPRSR20	
	220V with brake	Bulkhead - cable exit direction towards motor shaft	20 (0.5)	24 (0.2)	3000 ± 50 (118 ± 2)	ACS3-AFPWSS03	ACS3-AFPRSS03	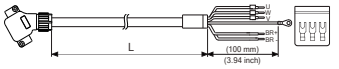
					5000 ± 50 (197 ± 2)	ACS3-AFPWSS05	ACS3-AFPRSS05	
					10000 ± 100 (394 ± 4)	ACS3-AFPWSS10	ACS3-AFPRSS10	
					20000 ± 100 (787 ± 4)	ACS3-AFPWSS20	ACS3-AFPRSS20	
	400V no brake	Bulkhead - cable exit direction towards motor shaft	20 (0.5)	-	3000 ± 50 (118 ± 2)	ACS3-AFPWSA03	ACS3-AFPRSA03	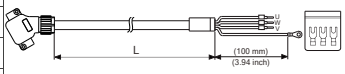
					5000 ± 50 (197 ± 2)	ACS3-AFPWSA05	ACS3-AFPRSA05	
					10000 ± 100 (394 ± 4)	ACS3-AFPWSA10	ACS3-AFPRSA10	
					20000 ± 100 (787 ± 4)	ACS3-AFPWSA20	ACS3-AFPRSA20	
	400V with brake	Bulkhead - cable exit direction towards motor shaft	20 (0.5)	24 (0.2)	3000 ± 50 (118 ± 2)	ACS3-AFPWSB03	ACS3-AFPRSB03	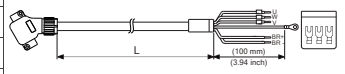
					5000 ± 50 (197 ± 2)	ACS3-AFPWSB05	ACS3-AFPRSB05	
					10000 ± 100 (394 ± 4)	ACS3-AFPWSB10	ACS3-AFPRSB10	
					20000 ± 100 (787 ± 4)	ACS3-AFPWSB20	ACS3-AFPRSB20	
	220V no brake	Bulkhead - cable exit direction towards encoder	20 (0.5)	-	3000 ± 50 (118 ± 2)	ACS3-ABPWSR03	ACS3-ABPRSR03	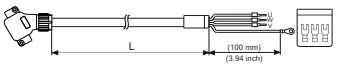
					5000 ± 50 (197 ± 2)	ACS3-ABPWSR05	ACS3-ABPRSR05	
					10000 ± 100 (394 ± 4)	ACS3-ABPWSR10	ACS3-ABPRSR10	
					20000 ± 100 (787 ± 4)	ACS3-ABPWSR20	ACS3-ABPRSR20	
	220V with brake	Bulkhead - cable exit direction towards encoder	20 (0.5)	24 (0.2)	3000 ± 50 (118 ± 2)	ACS3-ABPWSS03	ACS3-ABPRSS03	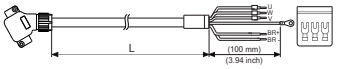
					5000 ± 50 (197 ± 2)	ACS3-ABPWSS05	ACS3-ABPRSS05	
					10000 ± 100 (394 ± 4)	ACS3-ABPWSS10	ACS3-ABPRSS10	
					20000 ± 100 (787 ± 4)	ACS3-ABPWSS20	ACS3-ABPRSS20	
	400V no brake	Bulkhead - cable exit direction towards encoder	20 (0.5)	-	3000 ± 50 (118 ± 2)	ACS3-ABPWSA03	ACS3-ABPRSA03	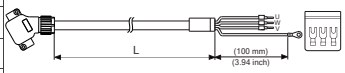
					5000 ± 50 (197 ± 2)	ACS3-ABPWSA05	ACS3-ABPRSA05	
					10000 ± 100 (394 ± 4)	ACS3-ABPWSA10	ACS3-ABPRSA10	
					20000 ± 100 (787 ± 4)	ACS3-ABPWSA20	ACS3-ABPRSA20	
	400V with brake	Bulkhead - cable exit direction towards encoder	20 (0.5)	24 (0.2)	3000 ± 50 (118 ± 2)	ACS3-ABPWSB03	ACS3-ABPRSB03	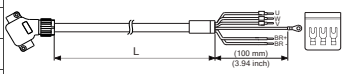
					5000 ± 50 (197 ± 2)	ACS3-ABPWSB05	ACS3-ABPRSB05	
					10000 ± 100 (394 ± 4)	ACS3-ABPWSB10	ACS3-ABPRSB10	
					20000 ± 100 (787 ± 4)	ACS3-ABPWSB20	ACS3-ABPRSB20	

B

B.2.2 F100 - F130 motors

Motor series	Applicable model	Connector type	Wire spec. AWG (mm²) UVW	Length (L) mm (inch)	Model number Standard	Model number Flexible	Illustration
ECM-E3	220V 400V no brake with brake*	Military - straight 3106A-18-10S	14 (2.1)	3000 ± 50 (118 ± 2)	ACS3-CAPWA303	ACS3-CAPFA303	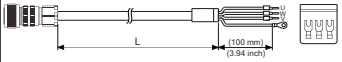
				5000 ± 50 (197 ± 2)	ACS3-CAPWA305	ACS3-CAPFA305	
				10000 ± 100 (394 ± 4)	ACS3-CAPWA310	ACS3-CAPFA310	
				20000 ± 100 (787 ± 4)	ACS3-CAPWA320	ACS3-CAPFA320	
	220V 400V no brake with brake*	Military - right angle 3108A-18-10S	14 (2.1)	3000 ± 50 (118 ± 2)	ACS3-CRPWA303	ACS3-CRPFA303	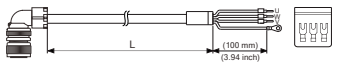
				5000 ± 50 (197 ± 2)	ACS3-CRPWA305	ACS3-CRPFA305	
				10000 ± 100 (394 ± 4)	ACS3-CRPWA310	ACS3-CRPFA310	
				20000 ± 100 (787 ± 4)	ACS3-CRPWA320	ACS3-CRPFA320	

Note: for models with a brake, you need to purchase the brake cable listed in Section B.2.4.

B.2.3 F180 motors

Motor series	Applicable model	Connector type	Wire spec. AWG (mm²) UVW	Length (L) mm (inch)	Model number Standard	Model number Flexible	Illustration
ECM-E3	220V 400V no brake with brake*	Military - straight 3106A-22-22S	14 (2.1)	3000 ± 50 (118 ± 2)	ACS3-CAPWC303	ACS3-CAPFC303	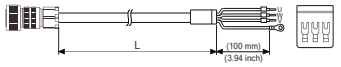
				5000 ± 50 (197 ± 2)	ACS3-CAPWC305	ACS3-CAPFC305	
				10000 ± 100 (394 ± 4)	ACS3-CAPWC310	ACS3-CAPFC310	
				20000 ± 100 (787 ± 4)	ACS3-CAPWC320	ACS3-CAPFC320	
	220V 400V no brake with brake*	Military - right angle 3108A-22-22S	14 (2.1)	3000 ± 50 (118 ± 2)	ACS3-CRPWC303	ACS3-CRPFC303	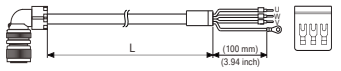
				5000 ± 50 (197 ± 2)	ACS3-CRPWC305	ACS3-CRPFC305	
				10000 ± 100 (394 ± 4)	ACS3-CRPWC310	ACS3-CRPFC310	
				20000 ± 100 (787 ± 4)	ACS3-CRPWC320	ACS3-CRPFC320	

Note: for models with a brake, you need to purchase the brake cable listed in Section B.2.4.

B.2.4 Brake cables for F100 - F180 motors

Motor series	Applicable model	Connector type	Wire spec. AWG (mm²) Brake	Length (L) mm (inch)	Model number Standard	Model number Flexible	Illustration
ECM-E3	220V 400V with brake	Military - straight CMV1-SP2S [bayonet]	20 (0.5)	3000 ± 50 (118 ± 2)	ACS3-CABRA103	ACS3-CABFA103	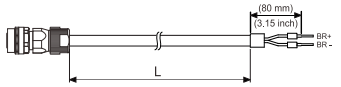
				5000 ± 50 (197 ± 2)	ACS3-CABRA105	ACS3-CABFA105	
				10000 ± 100 (394 ± 4)	ACS3-CABRA110	ACS3-CABFA110	
				20000 ± 100 (787 ± 4)	ACS3-CABRA120	ACS3-CABFA120	
		Military - straight [threaded, M17.5]	20 (0.5)	3000 ± 50 (118 ± 2)	ACS3-CABRM103	ACS3-CABFM103	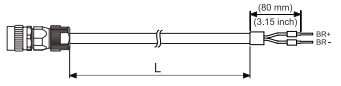
				5000 ± 50 (197 ± 2)	ACS3-CABRM105	ACS3-CABFM105	
				10000 ± 100 (394 ± 4)	ACS3-CABRM110	ACS3-CABFM110	
				20000 ± 100 (787 ± 4)	ACS3-CABRM120	ACS3-CABFM120	
		Military - right angle CMV1-AP2S [bayonet]	20 (0.5)	3000 ± 50 (118 ± 2)	ACS3-CRBRA103	ACS3-CRBFA103	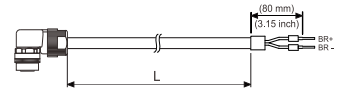
				5000 ± 50 (197 ± 2)	ACS3-CRBRA105	ACS3-CRBFA105	
				10000 ± 100 (394 ± 4)	ACS3-CRBRA110	ACS3-CRBFA110	
				20000 ± 100 (787 ± 4)	ACS3-CRBRA120	ACS3-CRBFA120	
		Military - right angle [threaded, M17.5]	20 (0.5)	3000 ± 50 (118 ± 2)	ACS3-CRBRM103	ACS3-CRBFM103	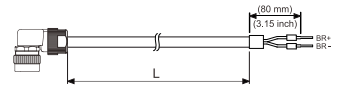
				5000 ± 50 (197 ± 2)	ACS3-CRBRM105	ACS3-CRBFM105	
				10000 ± 100 (394 ± 4)	ACS3-CRBRM110	ACS3-CRBFM110	
				20000 ± 100 (787 ± 4)	ACS3-CRBRM120	ACS3-CRBFM120	

Note: motors with bayonet receptacles are not compatible with threaded military connectors. See Section B.12 for details.

B.3 Power adapter cables and counterpart connector (for motors with bulkhead receptacles)

The power adapter cable is for connecting the motor with a bulkhead receptacle to a non-bulkhead power connector. The following illustrates where it is installed.

Connection methods:

(1) Power adapter cable with waterproof connector + counterpart of waterproof connector; prepare the cable yourself.

(2) Power adapter cable with standard connector + power cable with standard connector

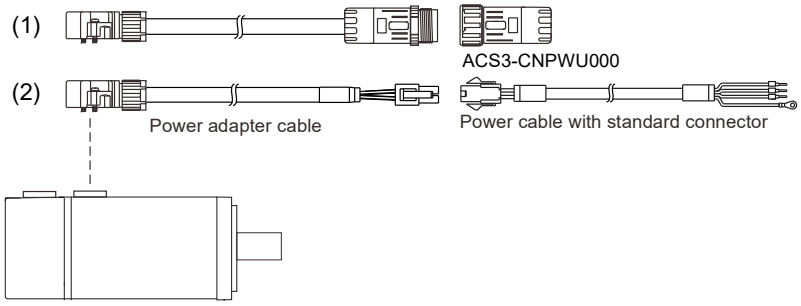

B.3.1 F40 - F80 motors

■ Power adapter cable with waterproof connector (IP67 rated): when mating the connector to the counterpart, ensure they are fully locked and meet the IP67 standard.

Motor series	Applicable model	Connector type	Wire spec. AWG (mm²)		Length (L) mm (inch)	Model number		Illustration
			UVW	Brake		Standard	Flexible	
ECM-E3	220V 400V no brake with brake	Bulkhead - cable exit direction towards motor shaft	20 (0.5)	24 (0.2)	300 ± 20 (11.8 ± 0.8)	ACS3-AFESSW0C	ACS3-AFEFSW0C	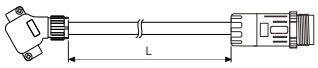
	220V 400V no brake with brake	Bulkhead - cable exit direction towards encoder	20 (0.5)	24 (0.2)	300 ± 20 (11.8 ± 0.8)	ACS3-ABESSW0C	ACS3-ABEFSW0C	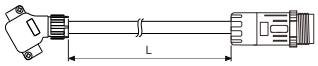

■ Counterpart of the preceding waterproof connector

Motor series	Frame size	Applicable model	Connector				Model number	Illustration
			Type	UVW	Brake	IP rating		
-	F40 - F80	220V 400V no brake with brake	Dedicated connector adapter	●	●	IP67	ACS3-CNPWU000	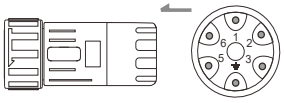

■ Power adapter cable with standard connector (not IP67 rated): do not use the cable in an environment exposed to oil or water.

Motor series	Applicable model	Connector type	Wire spec. AWG (mm²)		Length (L) mm (inch)	Model number		Illustration
			UVW	Brake		Standard	Flexible	
ECM-E3	220V 400V no brake	Bulkhead - cable exit direction towards motor shaft	20 (0.5)	-	300 ± 20 (11.8 ± 0.8)	ACS3-AFPWSR0C	ACS3-AFPRSR0C	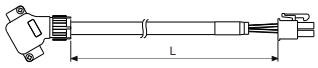
					500 ± 20 (19.7 ± 0.8)	ACS3-AFPWSR0E	ACS3-AFPRSR0E	
					700 ± 30 (27.6 ± 1.2)	ACS3-AFPWSR0G	ACS3-AFPRSR0G	
					900 ± 30 (35.4 ± 1.2)	ACS3-AFPWSR0J	ACS3-AFPRSR0J	
	220V 400V with brake	Bulkhead - cable exit direction towards motor shaft	20 (0.5)	24 (0.2)	300 ± 20 (11.8 ± 0.8)	ACS3-AFPWSS0C	ACS3-AFPRSS0C	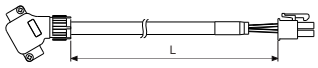
					500 ± 20 (19.7 ± 0.8)	ACS3-AFPWSS0E	ACS3-AFPRSS0E	
					700 ± 30 (27.6 ± 1.2)	ACS3-AFPWSS0G	ACS3-AFPRSS0G	
					900 ± 30 (35.4 ± 1.2)	ACS3-AFPWSS0J	ACS3-AFPRSS0J	
	220V 400V no brake	Bulkhead - cable exit direction towards encoder	20 (0.5)	-	300 ± 20 (11.8 ± 0.8)	ACS3-ABPWSR0C	ACS3-ABPRSR0C	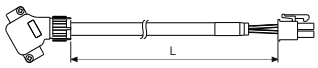
					500 ± 20 (19.7 ± 0.8)	ACS3-ABPWSR0E	ACS3-ABPRSR0E	
					700 ± 30 (27.6 ± 1.2)	ACS3-ABPWSR0G	ACS3-ABPRSR0G	
					900 ± 30 (35.4 ± 1.2)	ACS3-ABPWSR0J	ACS3-ABPRSR0J	
	220V 400V with brake	Bulkhead - cable exit direction towards encoder	20 (0.5)	24 (0.2)	300 ± 20 (11.8 ± 0.8)	ACS3-ABPWSS0C	ACS3-ABPRSS0C	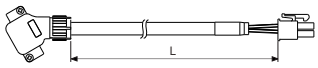
					500 ± 20 (19.7 ± 0.8)	ACS3-ABPWSS0E	ACS3-ABPRSS0E	
					700 ± 30 (27.6 ± 1.2)	ACS3-ABPWSS0G	ACS3-ABPRSS0G	
					900 ± 30 (35.4 ± 1.2)	ACS3-ABPWSS0J	ACS3-ABPRSS0J	

B.4 Encoder connectors

Motor series	Frame size	Connector type	IP rating	Model number	Illustration
ECM-E3	F40 - F80	Standard	IP20	ACS3-CAEN0000	
		Bulkhead - cable exit direction towards motor shaft	IP67	ACS3-AFEASA00	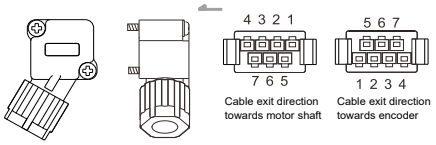 The preceding figure illustrates the difference between the two cable exit directions; only one wiring terminal is included.
		Bulkhead - cable exit direction towards encoder			
	F100 - F180	Military - straight CMV1-SP10S [bayonet]	IP67	ACS3-CAENA000	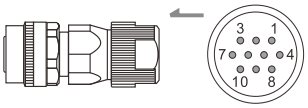
		Military - straight [threaded, M17.5]	IP67	ACS3-CAENM000	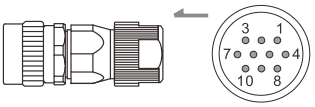
		Military - right angle CMV1-AP10S [bayonet]	IP67	ACS3-CRENA000	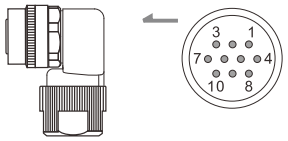
		Military - right angle [threaded, M17.5]	IP67	ACS3-CRENM000	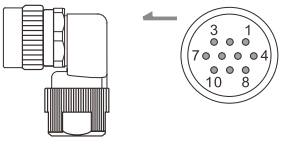

Note: motors with bayonet receptacles are not compatible with threaded military connectors. See Section B.12 for details.

B.5 Encoder cables

B.5.1 F40 - F80 motors

B

Motor series	Connector type	Encoder type	Length (L) mm (inch)	Model number		Illustration
				Standard	Flexible	
ECM-E3	Standard	Incremental	3000 ± 50 (118 ± 2)	ACS3-CAEN0103	ACS3-CAEF0103	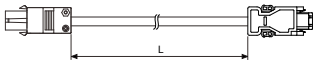
			5000 ± 50 (197 ± 2)	ACS3-CAEN0105	ACS3-CAEF0105	
			10000 ± 100 (394 ± 4)	ACS3-CAEN0110	ACS3-CAEF0110	
			20000 ± 100 (787 ± 4)	ACS3-CAEN0120	ACS3-CAEF0120	
		Absolute	3000 ± 50 (118 ± 2)	ACS3-CAEA0103	ACS3-CAEB0103	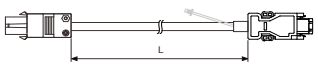
			5000 ± 50 (197 ± 2)	ACS3-CAEA0105	ACS3-CAEB0105	
			10000 ± 100 (394 ± 4)	ACS3-CAEA0110	ACS3-CAEB0110	
			20000 ± 100 (787 ± 4)	ACS3-CAEA0120	ACS3-CAEB0120	
	Bulkhead - cable exit direction towards motor shaft	Incremental	3000 ± 50 (118 ± 2)	ACS3-AFEASI03	ACS3-AFERSI03	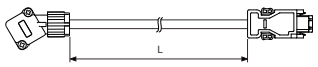
			5000 ± 50 (197 ± 2)	ACS3-AFEASI05	ACS3-AFERSI05	
			10000 ± 100 (394 ± 4)	ACS3-AFEASI10	ACS3-AFERSI10	
			20000 ± 100 (787 ± 4)	ACS3-AFEASI20	ACS3-AFERSI20	
		Absolute	3000 ± 50 (118 ± 2)	ACS3-AFEASA03	ACS3-AFERSA03	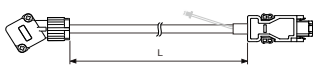
			5000 ± 50 (197 ± 2)	ACS3-AFEASA05	ACS3-AFERSA05	
			10000 ± 100 (394 ± 4)	ACS3-AFEASA10	ACS3-AFERSA10	
			20000 ± 100 (787 ± 4)	ACS3-AFEASA20	ACS3-AFERSA20	
	Bulkhead - cable exit direction towards encoder	Incremental	3000 ± 50 (118 ± 2)	ACS3-ABEASI03	ACS3-ABERSI03	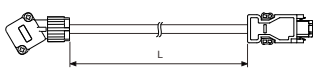
			5000 ± 50 (197 ± 2)	ACS3-ABEASI05	ACS3-ABERSI05	
			10000 ± 100 (394 ± 4)	ACS3-ABEASI10	ACS3-ABERSI10	
			20000 ± 100 (787 ± 4)	ACS3-ABEASI20	ACS3-ABERSI20	
		Absolute	3000 ± 50 (118 ± 2)	ACS3-ABEASA03	ACS3-ABERSA03	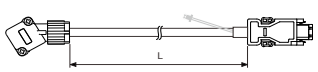
			5000 ± 50 (197 ± 2)	ACS3-ABEASA05	ACS3-ABERSA05	
			10000 ± 100 (394 ± 4)	ACS3-ABEASA10	ACS3-ABERSA10	
			20000 ± 100 (787 ± 4)	ACS3-ABEASA20	ACS3-ABERSA20	

B.5.2 F100 - F180 motors

Motor series	Connector type	Encoder type	Length (L) mm (inch)	Model number		Illustration
				Standard	Flexible	
ECM-E3	Military - straight CMV1-SP10S [bayonet]	Incremental	3000 ± 50 (118 ± 2)	ACS3-CAENA103	ACS3-CAEFA103	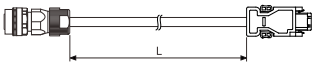
			5000 ± 50 (197 ± 2)	ACS3-CAENA105	ACS3-CAEFA105	
			10000 ± 100 (394 ± 4)	ACS3-CAENA110	ACS3-CAEFA110	
			20000 ± 100 (787 ± 4)	ACS3-CAENA120	ACS3-CAEFA120	
		Absolute	3000 ± 50 (118 ± 2)	ACS3-CAEAA103	ACS3-CAEBA103	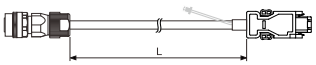
			5000 ± 50 (197 ± 2)	ACS3-CAEAA105	ACS3-CAEBA105	
			10000 ± 100 (394 ± 4)	ACS3-CAEAA110	ACS3-CAEBA110	
			20000 ± 100 (787 ± 4)	ACS3-CAEAA120	ACS3-CAEBA120	
	Military - straight [threaded, M17.5]	Incremental	3000 ± 50 (118 ± 2)	ACS3-CAENM103	ACS3-CAEFM103	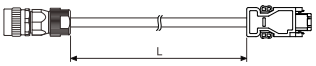
			5000 ± 50 (197 ± 2)	ACS3-CAENM105	ACS3-CAEFM105	
			10000 ± 100 (394 ± 4)	ACS3-CAENM110	ACS3-CAEFM110	
			20000 ± 100 (787 ± 4)	ACS3-CAENM120	ACS3-CAEFM120	
		Absolute	3000 ± 50 (118 ± 2)	ACS3-CAEAM103	ACS3-CAEBM103	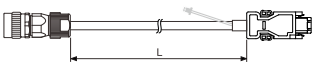
			5000 ± 50 (197 ± 2)	ACS3-CAEAM105	ACS3-CAEBM105	
			10000 ± 100 (394 ± 4)	ACS3-CAEAM110	ACS3-CAEBM110	
			20000 ± 100 (787 ± 4)	ACS3-CAEAM120	ACS3-CAEBM120	
	Military - right angle CMV1-AP10S [bayonet]	Incremental	3000 ± 50 (118 ± 2)	ACS3-CRENA103	ACS3-CREFA103	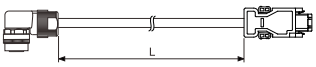
			5000 ± 50 (197 ± 2)	ACS3-CRENA105	ACS3-CREFA105	
			10000 ± 100 (394 ± 4)	ACS3-CRENA110	ACS3-CREFA110	
			20000 ± 100 (787 ± 4)	ACS3-CRENA120	ACS3-CREFA120	
		Absolute	3000 ± 50 (118 ± 2)	ACS3-CREAA103	ACS3-CREBA103	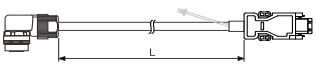
			5000 ± 50 (197 ± 2)	ACS3-CREAA105	ACS3-CREBA105	
			10000 ± 100 (394 ± 4)	ACS3-CREAA110	ACS3-CREBA110	
			20000 ± 100 (787 ± 4)	ACS3-CREAA120	ACS3-CREBA120	
	Military - right angle [threaded, M17.5]	Incremental	3000 ± 50 (118 ± 2)	ACS3-CRENM103	ACS3-CREFM103	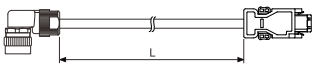
			5000 ± 50 (197 ± 2)	ACS3-CRENM105	ACS3-CREFM105	
			10000 ± 100 (394 ± 4)	ACS3-CRENM110	ACS3-CREFM110	
			20000 ± 100 (787 ± 4)	ACS3-CRENM120	ACS3-CREFM120	
		Absolute	3000 ± 50 (118 ± 2)	ACS3-CREAM103	ACS3-CREBM103	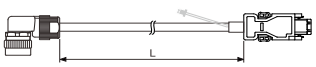
			5000 ± 50 (197 ± 2)	ACS3-CREAM105	ACS3-CREBM105	
			10000 ± 100 (394 ± 4)	ACS3-CREAM110	ACS3-CREBM110	
			20000 ± 100 (787 ± 4)	ACS3-CREAM120	ACS3-CREBM120	

Note: motors with bayonet receptacles are not compatible with threaded military connectors. See Section B.12 for details.

B.6 Encoder adapter cables and counterpart connector (for motors with bulkhead receptacles)

B

The encoder adapter cable is for connecting the motor with a bulkhead receptacle to a non-bulkhead encoder connector. The following illustrates where it is installed.

Connection methods:

(1) Encoder adapter cable with waterproof connector + counterpart of waterproof connector; prepare the cable yourself.

(2) Encoder adapter cable with standard connector + encoder cable with standard connector.

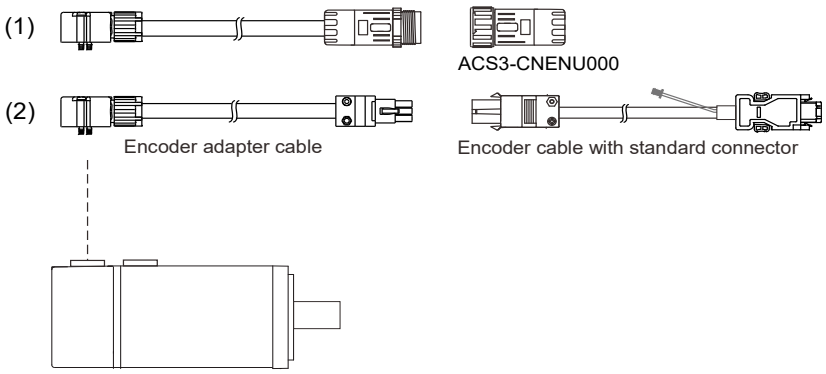

B.6.1 F40 - F80 motors

■ Encoder adapter cable with waterproof connector (IP67 rated): when mating the connector to the counterpart, ensure they are fully locked and meet the IP67 standard.

Motor series	Connector type	Encoder type	Length (L) mm (inch)	Model number		Illustration
				Standard	Flexible	
ECM-E3	Bulkhead - cable exit direction towards motor shaft	Incremental Absolute	300 ± 20 (11.8 ± 0.8)	ACS3-AFENSW0C	ACS3-AFEBSW0C	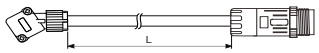
	Bulkhead - cable exit direction towards encoder	Incremental Absolute	300 ± 20 (11.8 ± 0.8)	ACS3-ABENSW0C	ACS3-ABEBSW0C	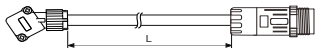

■ Counterpart of the preceding waterproof connector

Motor series	Frame size	Connector type	IP rating	Model number	Illustration
-	F40 - F80	Dedicated connector adapter	IP67	ACS3-CNENU000	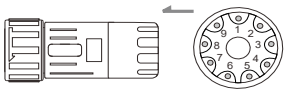

■ Power adapter cable with standard connector (not IP67 rated): do not use the cable in an environment exposed to oil or water.

Motor series	Connector type	Encoder type	Length (L) mm (inch)	Model number		Illustration
				Standard	Flexible	
ECM-E3	Bulkhead - cable exit direction towards motor shaft	Incremental	300 ± 20 (11.8 ± 0.8)	ACS3-AFEASI0C	ACS3-AFERSI0C	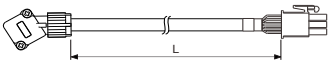
			500 ± 20 (19.7 ± 0.8)	ACS3-AFEASI0E	ACS3-AFERSI0E	
			700 ± 30 (27.6 ± 1.2)	ACS3-AFEASI0G	ACS3-AFERSI0G	
			900 ± 30 (35.4 ± 1.2)	ACS3-AFEASI0J	ACS3-AFERSI0J	
		Absolute	300 ± 20 (11.8 ± 0.8)	ACS3-AFEASA0C	ACS3-AFERSA0C	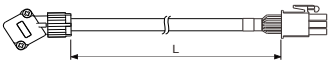
			500 ± 20 (19.7 ± 0.8)	ACS3-AFEASA0E	ACS3-AFERSA0E	
			700 ± 30 (27.6 ± 1.2)	ACS3-AFEASA0G	ACS3-AFERSA0G	
			900 ± 30 (35.4 ± 1.2)	ACS3-AFEASA0J	ACS3-AFERSA0J	
	Bulkhead - cable exit direction towards encoder	Incremental	300 ± 20 (11.8 ± 0.8)	ACS3-ABEASI0C	ACS3-ABERSI0C	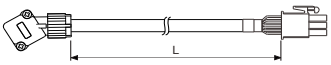
			500 ± 20 (19.7 ± 0.8)	ACS3-ABEASI0E	ACS3-ABERSI0E	
			700 ± 30 (27.6 ± 1.2)	ACS3-ABEASI0G	ACS3-ABERSI0G	
			900 ± 30 (35.4 ± 1.2)	ACS3-ABEASI0J	ACS3-ABERSI0J	
		Absolute	300 ± 20 (11.8 ± 0.8)	ACS3-ABEASA0C	ACS3-ABERSA0C	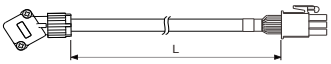
			500 ± 20 (19.7 ± 0.8)	ACS3-ABEASA0E	ACS3-ABERSA0E	
			700 ± 30 (27.6 ± 1.2)	ACS3-ABEASA0G	ACS3-ABERSA0G	
			900 ± 30 (35.4 ± 1.2)	ACS3-ABEASA0J	ACS3-ABERSA0J	

B

B.7 Battery boxes

Model number	Description	Illustration
ASD-MDBT0100	Single battery box (including one battery and two cables)	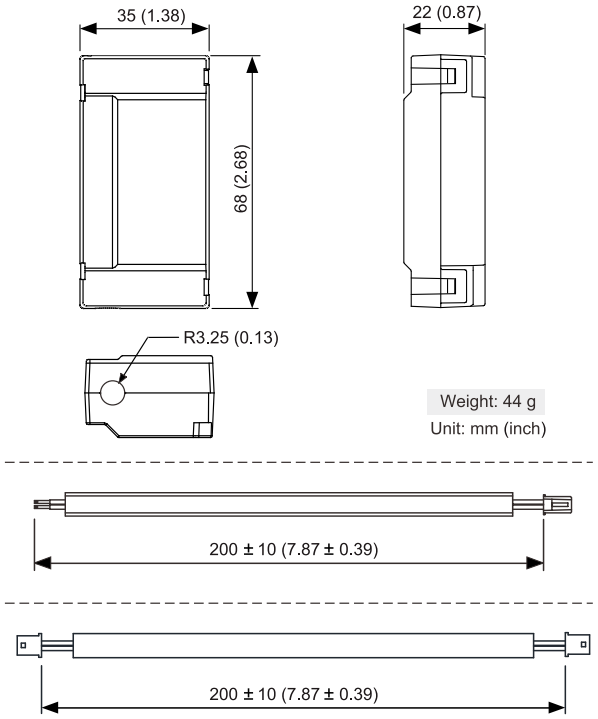
ASD-MDBT0200	Dual battery box (including two batteries and three cables)	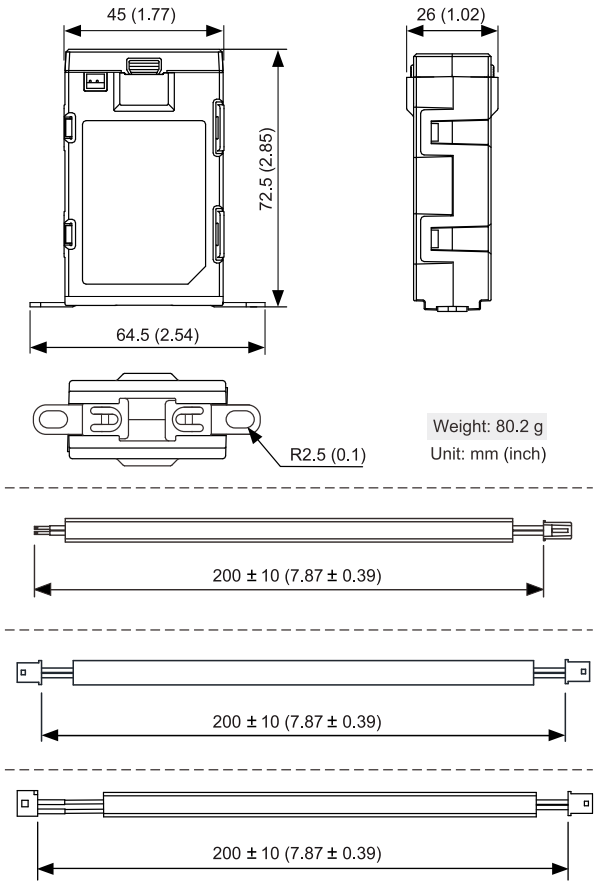

B.8 CN1 I/O connector

Model number	Description	Illustration
ACS3-CNTB0400	CN1 connector	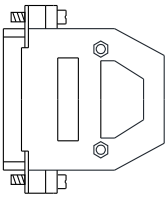

B.9 CN2 connector

Model number	Description	Illustration
ACS3-CNENC200	CN2 connector	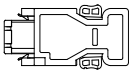

B.10 CN3 Modbus communication cable

Model number	Description	Illustration
ASD-CNUS0A08	Modbus communication cable (with an adapter)	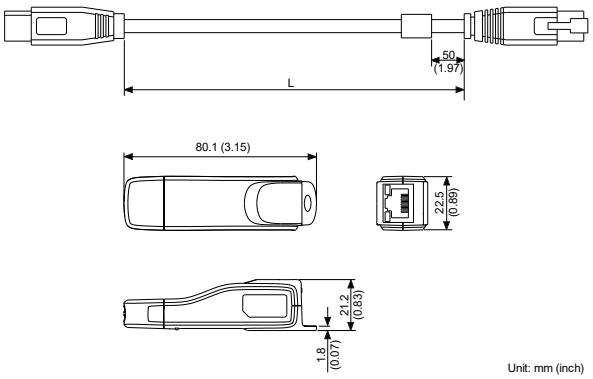

Length (L)	
mm	inch
3000 ± 100	118 ± 4

B.11 E3C–B2 adapter cable

Model number	Description	Illustration
ACS3-CABDC2	CN2 adapter cable	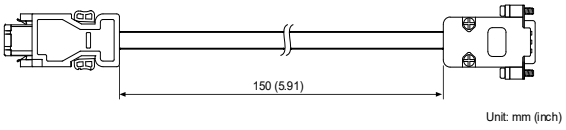

B.12 Selecting brake and encoder connectors (or cables) for F100 - F180 motors

B

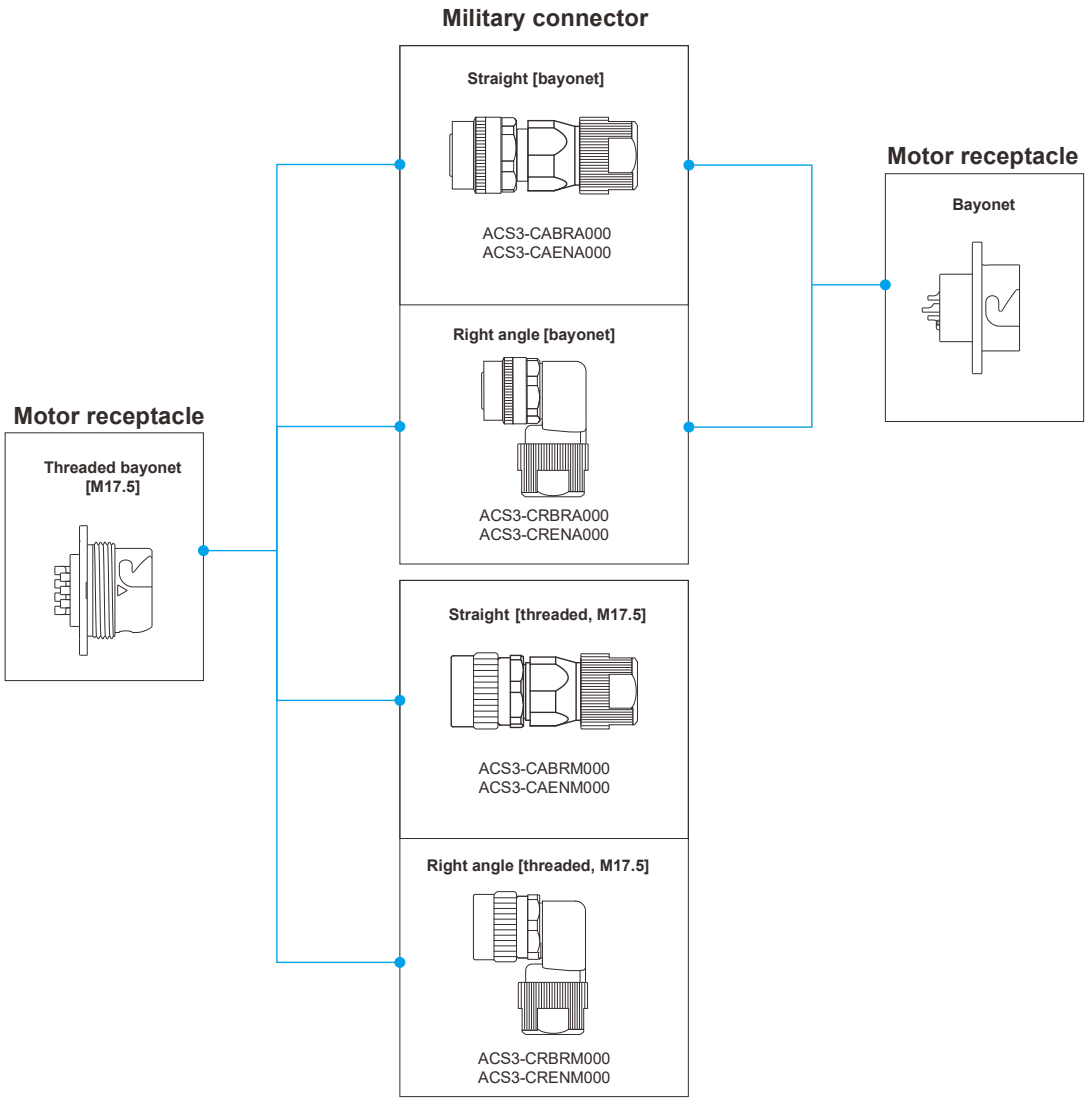

Revision History

Release date	Version	Chapter	Revision contents
June, 2026	V2.0 (Second edition)	A.1.2.2	Corrected the information in the 400V 2 kW / 3 kW servo drive dimensional drawing: the horizontal spacing of the rear mounting holes is changed from 60 (2.36) to 62 (2.44); unit: mm (inch).
March, 2026	V1.0 (First edition)	-	-

(This page is intentionally left blank.)

Smarter. Greener. Together.

Industrial Automation Headquarters

Delta Electronics, Inc.
Taoyuan Technology Center
No.18, Xinglong Rd., Taoyuan District,
Taoyuan City 330477, Taiwan
TEL: +886-3-362-6301 / FAX: +886-3-371-6301

Asia

China: Delta Electronics (Shanghai) Co., Ltd.
No.182 Minyu Rd., Pudong Shanghai, P.R.C.
Post code : 201209
TEL: +86-21-6872-3988 / FAX: +86-21-6872-3996
Customer Service: 400-820-9595

Japan: Delta Electronics (Japan), Inc.
Industrial Automation Sales Department
4-11-25, Shibaura, Minato-ku, Tokyo 108-0023, Japan
TEL: +81-3-6811-5470 / FAX: +81-3-6811-5802

Korea: Delta Electronics (Korea), Inc.
1511, 219, Gasan Digital 1-Ro., Geumcheon-gu,
Seoul, 08501 South Korea
TEL: +82-2-515-5305 / FAX: +82-2-515-5302

Singapore: Delta Energy Systems (Singapore) Pte Ltd.
4 Kaki Bukit Avenue 1, #05-04, Singapore 417939
TEL: +65-6747-5155 / FAX: +65-6744-9228

India: Delta Electronics (India) Pvt. Ltd.
Plot No. 69-BCD, Bommasandra Industrial Area, Hosur
Main Road, Anekal,Bangalore 560068, Karnatka, India
Tel: +91-08067164777 / Fax: +91-0806716784

Thailand: Delta Electronics (Thailand) PCL.
909 Soi 9, Moo 4, Bangpoo Industrial Estate (E.P.Z),
Pattana 1 Rd., T.Phraksa, A.Muang,
Samutprakarn 10280, Thailand
TEL: +66-2709-2800 / FAX: +66-2709-2827

Australia: Delta Electronics (Australia) Pty Ltd.
Unit 2, Building A, 18-24 Ricketts Road,
Mount Waverley, Victoria 3149 Australia
Mail: IA.au@deltaww.com
TEL: +61-1300-335-823 / +61-3-9543-3720

Americas

USA: Delta Electronics (Americas) Ltd.
5101 Davis Drive, Research Triangle Park, NC 27709, U.S.A.
TEL: +1-919-767-3813

Brazil: Delta Electronics Brazil Ltd.
Estrada Velha Rio-São Paulo, 5300 Eugênio de
Melo - São José dos Campos CEP: 12247-004 - SP - Brazil
TEL: +55-12-3932-2300 / FAX: +55-12-3932-237

Mexico: Delta Electronics International Mexico S.A. de C.V.
Gustavo Baz No. 309 Edificio E PB 103
Colonia La Loma, CP 54060
Tlalnepantla, Estado de México
TEL: +52-55-3603-9200

EMEA

Delta Electronics (Netherlands) B.V.
Sales: Sales.IA.EMEA@deltaww.com
Marketing: Marketing.IA.EMEA@deltaww.com
Technical Support: iatechnicalsupport@deltaww.com
Customer Support: Customer-Support@deltaww.com
Service: Service.IA.emea@deltaww.com
TEL: +31(0)40 800 3900

Delta Electronics (Netherlands) B.V.
Automotive Campus 260, 5708 JZ Helmond, The Netherlands
Mail: Sales.IA.Benelux@deltaww.com
TEL: +31(0)40 800 3900

Delta Electronics (Netherlands) B.V.
Coesterweg 45,D-59494 Soest,Germany
Mail: Sales.IA.DACH@deltaww.com
TEL: +49 2921 987 238

Delta Electronics (France) S.A.
ZI du bois Challand 2,15 rue des Pyrénées,
Lisses, 91090 Evry Cedex, France
Mail: Sales.IA.FR@deltaww.com
TEL: +33(0)1 69 77 82 60

Delta Electronics Solutions (Spain) S.L.U
Ctra. De Villaverde a Vallecas, 265 1º Dcha Ed.
Hormigueras – P.I. de Vallecas 28031 Madrid
TEL: +34(0)91 223 74 20

Carrer Llacuna 166, 08018 Barcelona, Spain
Mail: Sales.IA.Iberia@deltaww.com

Delta Electronics (Italy) S.r.l.
Via Meda 2–22060 Novedrate(CO)
Piazza Grazioli 18 00186 Roma Italy
Mail: Sales.IA.Italy@deltaww.com
TEL: +39 039 8900365

Delta Greentech Elektronik San. Ltd. Sti. (Turkey)
Şerifali Mah. Hendem Cad. Kule Sok. No:16-A
34775 Ümraniye – İstanbul
Mail: Sales.IA.Turkey@deltaww.com
TEL: + 90 216 499 9910

Eltek Dubai (Eltek MEA DMCC)
OFFICE 2504, 25th Floor, Saba Tower 1,
Jumeirah Lakes Towers, Dubai, UAE
Mail: Sales.IA.MEA@deltaww.com
TEL: +971(0)4 2690148

*We reserve the right to change the information in this manual without prior notice.

DELTA_IA-ASD_ASDA-E3C-L_UM_EN_20260612